PureFlow GSX

Traffic Shaper
NF7101C
Operation Manual

Fifth Edition

For safety and warning information, please read this manual before attempting to install and use the equipment.
Keep this manual with the equipment.

ANRITSU NETWORKS CO., LTD.

Document No.: NF7101-W006E-5.0

Safety Symbols

To prevent the risk of personal injury or loss related to equipment malfunction, Anritsu Networks Co., Ltd. uses the following safety symbols to indicate safety-related information. Ensure that you clearly understand the meanings of the symbols BEFORE using the equipment. Some or all of the following symbols may be used on all Anritsu Networks Co., Ltd. equipment. In addition, there may be other labels attached to products that are not shown in the diagrams in this manual.

Symbols used in manual

⚠ DANGER This indicates a very dangerous procedure that could result in serious injury or death if not performed properly.

⚠ WARNING This indicates a hazardous procedure that could result in serious injury or death if not performed properly.

⚠ CAUTION This indicates a hazardous procedure or danger that could result in light-to-severe injury, or loss related to equipment malfunction, if proper precautions are not taken.

Safety Symbols Used on Equipment and in Manual

The following safety symbols are used inside or on the equipment near operation locations to provide information about safety items and operation precautions. Ensure that you clearly understand the meanings of the symbols and take the necessary precautions BEFORE using the equipment.

This indicates a prohibited operation. The prohibited operation is indicated symbolically in or near the barred circle.

This indicates an obligatory safety precaution. The obligatory operation is indicated symbolically in or near the circle.

This indicates a warning or caution. The contents are indicated symbolically in or near the triangle.

This indicates a note. The contents are described in the box.

PureFlow GSX
Traffic Shaper NF7101C
Operation Manual

28 March 2014 (First Edition)
30 October 2017 (Fifth Edition)

Copyright © 2014-2017, ANRITSU NETWORKS CO., LTD.
All rights reserved. No part of this manual may be reproduced without the prior written permission of the publisher.
The contents of this manual may be changed without prior notice.
Printed in Japan

For Safety

⚠ WARNING

1 ALWAYS refer to the operation manual when working near locations at which the alert mark shown on the left is attached. If the advice in the operation manual is not followed there is a risk of personal injury or reduced equipment performance. The alert mark shown on the left may also be used with other marks and descriptions to indicate other dangers.

2 Laser radiation warning
NEVER look directly into the opening of the optical modules or the optical fiber cable connectors. The optical modules emit laser beams, so there is a risk of injury if laser radiation enters the eye.

3 To avoid electric shock or failure, do not insert objects in the openings or connectors.

4 To avoid electric shock, disconnect all power cords before maintenance.

or

5 For safety, use the specified 3-pin power cord and the outlet with earth terminal. When using a conversion adapter instead of the 3-pin power cord, be sure to earth the terminal of green ground wire attached to the conversion adapter. If power is supplied without earthing the equipment, there is a risk of receiving a severe or fatal electric.

6 To prevent electric shock, be sure to ground the devices connected to this equipment.

7 An unintended high voltage might be applied to the LAN cable due to lightening or an accident in the power circuitry. Be careful when handling the metal parts of this equipment and the LAN cables.

For Safety

⚠ WARNING

Disassembly

⚠ WARNING

8 To avoid fire or electric shock, do not disassemble or modify this device. There are high-voltage parts in this equipment presenting a risk of severe injury or fatal electric shock to untrained personnel. In addition, there is a risk of damage to precision components.

Falling Over

9 This equipment should always be installed in the correct manner. If the equipment is installed incorrectly so that it is unstable, the equipment might fall down or drop from the rack, resulting in injury.

Cleaning

10 Keep the power supply and cooling fan free of dust.

- Clean the power plug regularly. If dust accumulates around the power pins, there is a risk of fire.
- Keep the cooling fan clean so that the ventilation holes are not obstructed. If the ventilation holes are obstructed, the equipment inside becomes hot and might catch fire.

For Safety

⚠ CAUTION

Power Supply	The power of the equipment is turned off by removing the power plug. Be sure to connect the power cable to an accessible outlet near the equipment so that the power cable plug can be removed easily.
Repair	This equipment cannot be repaired by the customer. If the equipment fails, contact an Anritsu Networks Co., Ltd. Service and Sales office. You could find the contact information on the last page of the printed version of this manual, and is available in a separate file on the CD-ROM.
External Storage Media	This equipment can use a CompactFlash card or USB flash drive as external data storage media. The contents of the CompactFlash card or USB flash drive might be corrupted due to incorrect usage or device failure. It is recommended to back up the contents as a precaution. Anritsu Networks Co., Ltd. is not liable for the loss of stored memory.
Lifetime of Parts	The life span of certain parts used in this equipment is limited. Such parts are recommended to be replaced periodically. If these parts are to operate continuously for a long time, it is recommended to design a parts operation plan taking into account the replacement timing. For details about parts with limited life spans, see B.4 Environment.
Use in Corrosive Atmospheres	Exposure to corrosive gases such as hydrogen sulfide, sulfurous acid, and hydrogen chloride will cause faults and failures. Note that some organic solvents release corrosive gases.

For Safety

Laser Safety

The laser in this equipment is classified as Class 1 according to the IEC 60825-1 standards, or as Class I according to the 21 CFR 1040.10 standard. The laser safety label “Class 1” is attached to the front panel of the equipment.

Class 1 indicates the level of danger of the laser radiation. This is specified in IEC 60825-1 as described below.

Class 1: Lasers that are safe under reasonably foreseeable conditions of operation, including the use of optical instruments to view the beams.

Class I indicates the level of danger of the laser radiation. This is specified in 21 CFR 1040.10 as described below.

Class I: Class I levels of laser radiation are not considered to be hazardous.

⚠ CAUTION

Use of controls or adjustments or performance of procedures other than those specified herein may result in hazardous radiation exposure.

The use of optical instruments with this product will increase eye hazard.

Regulatory Compliance Statements

1 About FCC

FCC Class A Notice (For U.S.A.)

This equipment has been tested and found to comply with the limits for a Class A digital device, pursuant to part 15 of the FCC rules. These limits are designed to provide reasonable protection against harmful interference when the equipment is operated in a commercial environment. This equipment generates, uses, and can radiate radio frequency energy and, if not installed and used in accordance with the instruction manual, may cause harmful interference to radio communication. Operation of this equipment in a residential area is likely to cause harmful interference, in which case the user will be required to correct the interference at his own expense.

2 About ICES

CAN ICES-3 (A)/NMB-3(A)

This equipment has been tested and found to comply with Canadian ICES-003.

3 About VCCI

This is a Class A product based on the standard of the VCCI Council. If this equipment is used in a domestic environment, radio interference may occur, in which case, the user may be required to take corrective actions.

4 About JIS C 61000-3-2

This equipment has been tested and found to comply with the current JIS C 61000-3-2 harmonic standard.

5 About UL 60950-1

This equipment has been tested and found to comply with the UL 60950-1 safety standard.

Warranty

Anritsu Networks Co., Ltd. will repair this equipment free-of-charge if a malfunction occurs within one year after shipment due to a manufacturing fault. However, software fixes will be made in accordance with the separate Software License Agreement. Moreover, Anritsu Networks Co., Ltd. will deem this warranty void when:

- The fault is outside the scope of the warranty conditions separately described in the operation manual.
- The fault is due to mishandling, misuse, or unauthorized modification or repair of the equipment by the customer.
- The fault is due to severe usage clearly exceeding normal usage.
- The fault is due to improper or insufficient maintenance by the customer.
- The fault is due to natural disaster, including fire, wind, flooding, earthquake, lightning strike, or volcanic ash, etc.
- The fault is due to damage caused by acts of destruction, including civil disturbance, riot, or war, etc.
- The fault is due to explosion, accident, or breakdown of any other machinery, facility, or plant, etc.
- The fault is due to use of non-specified peripheral or applied equipment or parts, or consumables, etc.
- The fault is due to use of a non-specified power supply or in a non-specified installation location.
- The fault is due to use in unusual environments(Note).
- The fault is due to activities or ingress of living organisms, such as insects, spiders, fungus, pollen, or seeds.

In addition, this warranty is valid only for the original equipment purchaser. It is not transferable if the equipment is resold.

Anritsu Networks Co., Ltd. shall assume no liability for injury or financial loss of the customer due to the use of or a failure to be able to use this equipment.

Note:
For the purpose of this Warranty, "unusual environments" means use:

- In places of direct sunlight
- In dusty places
- Outdoors
- In liquids, such as water, oil, or organic solvents, and medical fluids, or places where these liquids may adhere
- In salty air or in place chemically active gases (sulfur dioxide, hydrogen sulfide, chlorine, ammonia, nitrogen dioxide, or hydrogen chloride etc.) are present
- In places where high-intensity static electric charges or electromagnetic fields are present
- In places where abnormal power voltages (high or low) or instantaneous power failures occur

- In places where condensation occurs
- In the presence of lubricating oil mists
- In places at an altitude of more than 2,000 m
- In the presence of frequent vibration or mechanical shock

Anritsu Networks Co., Ltd. Contact

In the event that this equipment malfunctions, contact an Anritsu Networks Co., Ltd. Service and Sales office. Contact information can be found on the last page of the printed version of this manual, and is available in a separate file on the CD-ROM.

Maintenance Contract

Anritsu Networks Co., Ltd. can provide a range of optional services under a maintenance contract. For details, contact an Anritsu Networks Co., Ltd. Service and Sales office.

Software License Agreement

This license agreement (“the License”) constitutes a legally binding contract between you and Anritsu Networks Co., Ltd. (“Anritsu Networks”) concerning the use of Anritsu Networks system software NF7101-S003A (“the Software”). Once you start using the Software, it is deemed that you have agreed to be bound by the provisions in the License and that a contract based on these provisions has been entered into between you and Anritsu Networks.
The Software is protected by all relevant laws and treaties pertaining to copyrights and intellectual property rights, including but not limited to the Copyright Act. Anritsu Networks grants you the right to use the Software as per the License.

1. License Grant

Anritsu Networks grants you the following rights:

1. You may use the Software for a single designated Anritsu Networks PureFlow GSX Traffic Shaper device.
2. You may use the Software only for the purposes of carrying out operations in your company.

2. Other Rights and Restrictions

1. The Software may not be used concurrently on more than one computer, regardless of whether the computers are owned by you or by a third party.
2. You may not make a copy of the Software for other than backup purposes, nor may you distribute, lend, rent, lease, use as collateral, or otherwise provide the Software to a third party. The license to use the Software cannot be transferred, sold, or otherwise passed to third party. You may under no circumstances transfer the license to use the Software to a worker or member of another company or group.
3. You may not modify, translate, reverse-engineer, decompile, disassemble, or create a product derived from the Software or related documents. You are granted the license to use one copy of the Software, in its entirety. The component parts of the Software may not be used separately.
4. You may not modify, correct, or otherwise change the ownership labels on the third-party software bundled with the Software.

3. License Cancelation and Termination

1. In the event that you violate any of the terms or provisions of the License, Anritsu Networks reserves the right to cancel the License immediately, without prior notice.
2. If the License is canceled, you must cease using the Software and dispose of the Software and all its component parts, all related documents, and all copies of the Software and its related documents, and erase the software completely from the storage media on your computer.
3. Anritsu Networks takes no responsibility for any incidental, consequential, or punitive damages incurred by you or a third party due to an inability to use the Software, in whole or in part, occasioned by the cancelation of the License.

4. Limitations of Warranty

1. You understand the risks involved in using the Software and agree to take full responsibility for any direct or indirect damage that may occur as the result of using the Software, including but not limited to loss of data, server stoppages, interruptions to work, and claims made by third parties.
2. Anritsu Networks does not guarantee to fix any defects, including bugs and structural problems, that might exist in the Software. Each written information or advice given by Anritsu Networks shall require a new warranty, or in any way increase the scope of this warranty.
3. Anritsu Networks reserves the right to change or cease providing incidental services associated with the Software without your prior permission. Anritsu Networks does not guarantee that the usage environment of the Software when the License was concluded will remain the same in perpetuity.

5. Limitations of Liability

In no event will Anritsu Networks, the supplier and/or reseller of the Software, or the supplier of the information content composing the Software be liable for direct, indirect, special, incidental, or consequential damages or damages from loss of business value, suspension of business, computer failure, or any other commercial damages or loss incurred by you or any third party, including as a result of an illegal act or based on a contract or other legal grounds.

6. Export Restrictions

You may not use or otherwise export or re-export directly or indirectly this Software except as authorized by Japanese and United States law. In particular, this software may not be exported or re-exported (a) into any Japanese or US embargoed countries or (b) to anyone on the Japanese or US Treasury Department's list of Specially Designated Nationals or the US Department of Commerce Denied Persons List or Entity List. By using this Software, you warrant that you are not located in any such country or on any such list. You also agree that you will not use this Software for any purposes prohibited by Japanese and US law, including, without limitation, the development, design and manufacture or production of missiles or nuclear, chemical or biological weapons of mass destruction.

7. Reparations

If Anritsu Networks suffers any loss, financial or otherwise, due to your violation of the terms of this license agreement, Anritsu Networks shall have the right to seek proportional damages from you.

8. Dispute Resolution

If matters of dispute or items not covered by this license agreement arise, they shall be resolved by negotiations in good faith between you and Anritsu Networks.

9. Court of Jurisdiction

This license agreement shall be interpreted in accordance with Japanese law and any disputes that cannot be resolved by negotiation described in Article 8 shall be settled by the Japanese courts.

Notes On Export Management

This product and its manuals may require an Export License/Approval by the Government of the product's country of origin for re-export from your country.
Before re-exporting the product or manuals, please contact us to confirm whether they are export-controlled items or not.
When you dispose of export-controlled items, the products/manuals need to be broken/shredded so as not to be unlawfully used for military purpose.

Disposal Procedure

This product incorporates a lithium battery and compound semiconductors that contain arsenic. Be sure to follow national and local laws when disposing of this product.

About This Manual

This operation manual describes how to install and handle the PureFlow GSX Traffic Shaper NF7101C (hereafter referred to as “this device”).

The operation manual of the NF7101C consists of the following three manuals. This document is <1>.

<1> Operation Manual (NF7101-W006E)

Describes the basic operation, maintenance procedures, common features, and common remote control operations.

<2> Command Reference (NF7101-W007E)

Describes in detail the commands used in the NF7101C.

<3> Configuration Guide (NF7101-W008E)

Describes the basic features of the NF7101C and provides specific examples of the settings required to build a network using these features.

If the following documents related to the NF7101C or other documents related to the features of the NF7101C are issued, be sure to read them:

Release notes
(For details of the issuance of release notes, contact your dealer or an Anritsu Networks Co., Ltd. customer support center.)

Table of Contents

For Safety iii

About This Manual I

Chapter 1 Overview 1-1

1.1 Overview 1-2
1.2 Device configuration 1-4
1.3 Part names and functions..... 1-11

Chapter 2 Unpacking and Installation 2-1

2.1 Unpacking 2-2
2.2 Selecting an installation location 2-4
2.3 Open space 2-5
2.4 Installing the main unit 2-6
2.5 Connecting the Network port..... 2-11
2.6 Connecting and removing the UTP cable 2-22
2.7 Inserting and removing the CF card 2-24
2.8 Connecting and removing the USB memory..... 2-27
2.9 Daily inspection..... 2-29
2.10 Packing..... 2-30

Chapter 3 Startup and Shutdown..... 3-1

3.1 Supplying power 3-2
3.2 Power supply redundancy..... 3-6
3.3 Settings 3-7
3.4 Turn off the AC power..... 3-9

Chapter 4 Unit Replacement..... 4-1

4.1 Procedure for replacing a fan unit..... 4-2
4.2 Procedure for replacing a power supply unit..... 4-5
4.3 Procedure for adding a power supply unit..... 4-9

Chapter 5 Troubleshooting 5-1

5.1 LED indicator information 5-2
5.2 Troubleshooting errors 5-3
5.3 Order the repair 5-7

Appendix A I/O Interface Specifications A-1

A.1 Console port for management A-2
A.2 Ethernet port for management A-3
A.3 USB port A-4
A.4 Network port (10GBASE-SR SFP+) A-5
A.5 Network port (10GBASE-LR SFP+) A-6
A.6 Network port (1000BASE-SX SFP) A-7
A.7 Network port (1000BASE-LX SFP) A-8
A.8 Network port (10/100/1000BASE-T SFP) A-9

Appendix B Device Specifications B-1

B.1 Functions B-2
B.2 Dimensions and weight B-4
B.3 Power B-5
B.4 Environment B-6
B.5 Interference standards B-7
B.6 Safety standards B-8

Appendix C Third Party Software License .. C-1

C.1 Third Party Software C-2
C.2 GPLv2 ..... C-3
C.3 GPLv3 ..... C-7
C.4 LGPLv2.1 ..... C-16
C.5 iputils C-23
C.6 ntpd C-24
C.7 libuuid C-25
C.8 sudo C-26
C.9 openssh C-28
C.10 openssl C-33
C.11 zlib C-35
C.12 radiusclient-ng C-36
C.13 apache C-38
C.14 json-c C-41

(Blank page)

Chapter 1 Overview

This chapter provides an overview of the NF7101C and describes the NF7101C configuration.

1.1 Overview 1-2
1.2 Device configuration..... 1-4
1.2.1 Main unit configuration 1-4
1.2.2 Main unit overview 1-6
1.2.3 Option list..... 1-7
1.2.4 Overview of options..... 1-9
1.3 Part names and functions..... 1-11

1.1 Overview

The NF7101C is installed on a network distribution path to control traffic based on the user's network policy. The NF7101C can be placed on a table or installed in a rack. To enhance reliability, the fan unit and power supply unit have a redundancy configuration.

(1) **Fan redundancy system**

Using two fan units enables the NF7101C to continue operating even if one of the fan units fails. Fan units can be replaced by the user.

(2) **Power supply redundancy system**

A power supply redundancy system can be constructed. This system enables the NF7101C to continue operating even if one of the power supply units fails. The operating power supply unit does not have to be disconnected when replacing the malfunctioning unit, enabling the NF7101C to continue operating during power supply unit replacement. The power supply unit required for the redundancy system is an optional unit. Power supply units can be replaced by the user.

Figure 1.1-1 shows an external view from the top, looking at the front of the NF7101C.
Figure 1.1-2 shows an external view from the top, looking at the rear of the NF7101C.
Figure 1.1-3 shows a front view of the NF7101C.
Figure 1.1-4 shows a rear view of the NF7101C.
For details about the parts of the NF7101C, see section 1.3 "Part names and functions".

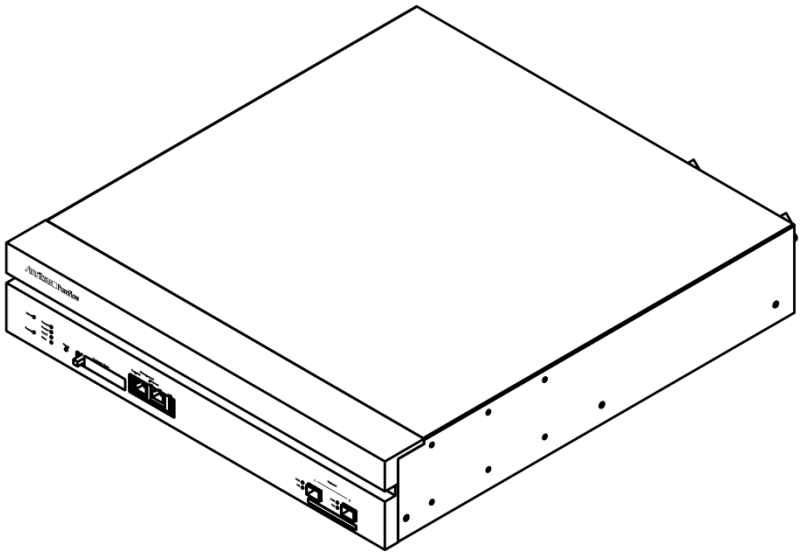

Figure 1.1-1 Top view from the front

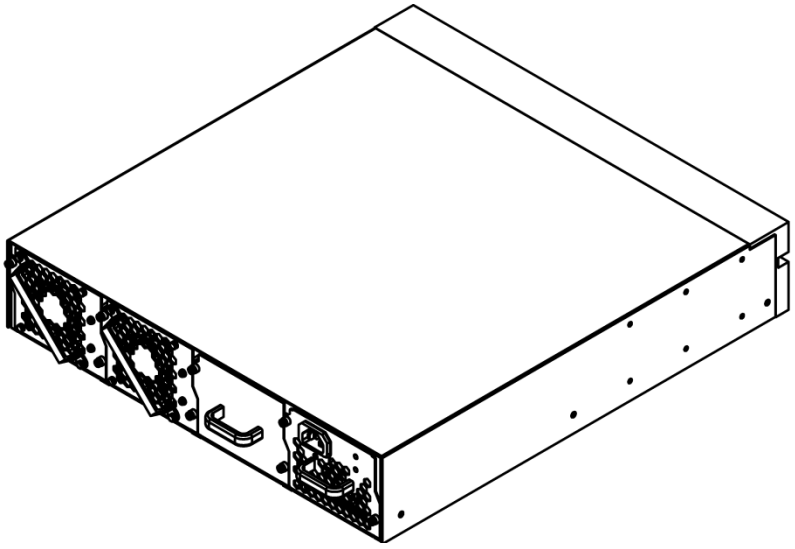

Figure 1.1-2 Top view from the rear

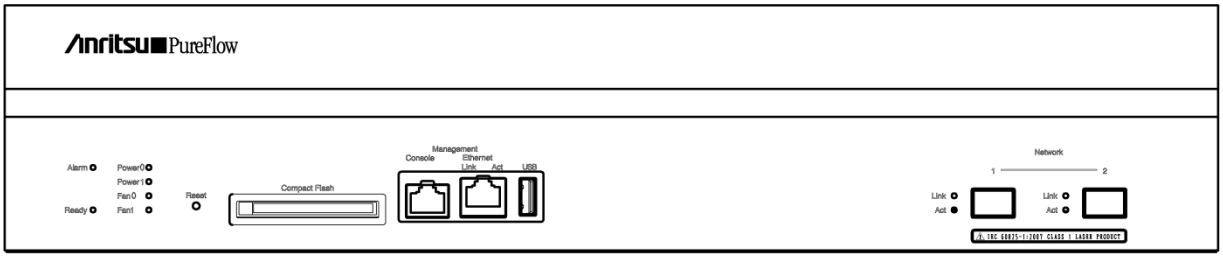

Figure 1.1-3 Front view of the NF7101C

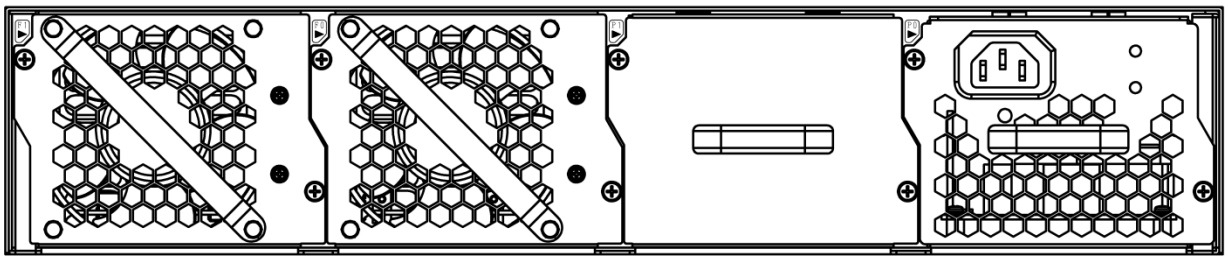

Figure 1.1-4 Rear view of the NF7101C

1.2 Device configuration

1.2.1 Main unit configuration

The NF7101C is configured as shown below.

Table 1.2.1-1 Main unit

Model name	Item name	Remark
NF7101C	Traffic Shaper	PureFlow GSX

Table 1.2.1-2 Standard accessories

Model name	Item name	Qty.	Remark
NF7000-U001A	150W AC Input Power Supply Unit	1	Pre-installed
-	AC Power Cord Clamp	1	
NF7000-U002A	FAN Unit	2	Pre-installed
NF7000-M001A	Power Unit Blank Panel	1	Pre-installed
PJ012	Console cable	1	
NF7101-W005A	Operation Manual CD-ROM	1	CD-ROM
NF7101-W009A	Safety Manual	1	Booklet
PB001	CF cap	1	For CF card slot Pre-installed
NF7000-M002A	Rack Mount Kit	1 unit	Two rack mount angles Eight flat head screws (M4) Four pan head screws (M5)
-	Rubber pad	4	
J1232A	SFP cage plug	2	Pre-installed
-	USB cap	1	Pre-installed
–	Getting Started Guide	1	Paper
–	Unpacking instructions	1	Paper
–	Export announcement card	1	Paper

Table 1.2.1-3 Software

Model name	Item name	Remark
NF7101-S003A	Basic Software	Included in the main unit

Note:

The SFP+ module, SFP module, and AC power cord are not supplied as standard. Purchase them separately by referring to Table 1.2.3-1 "Option list".

⚠ WARNING

Be sure to purchase an AC power cord in the country in which you are using the NF7101C. If you use a cord purchased in another country, it may emit smoke or catch fire, causing a serious accident. Cords purchased in other countries may also violate the laws and/or regulations of the country in which the NF7101C is being used.

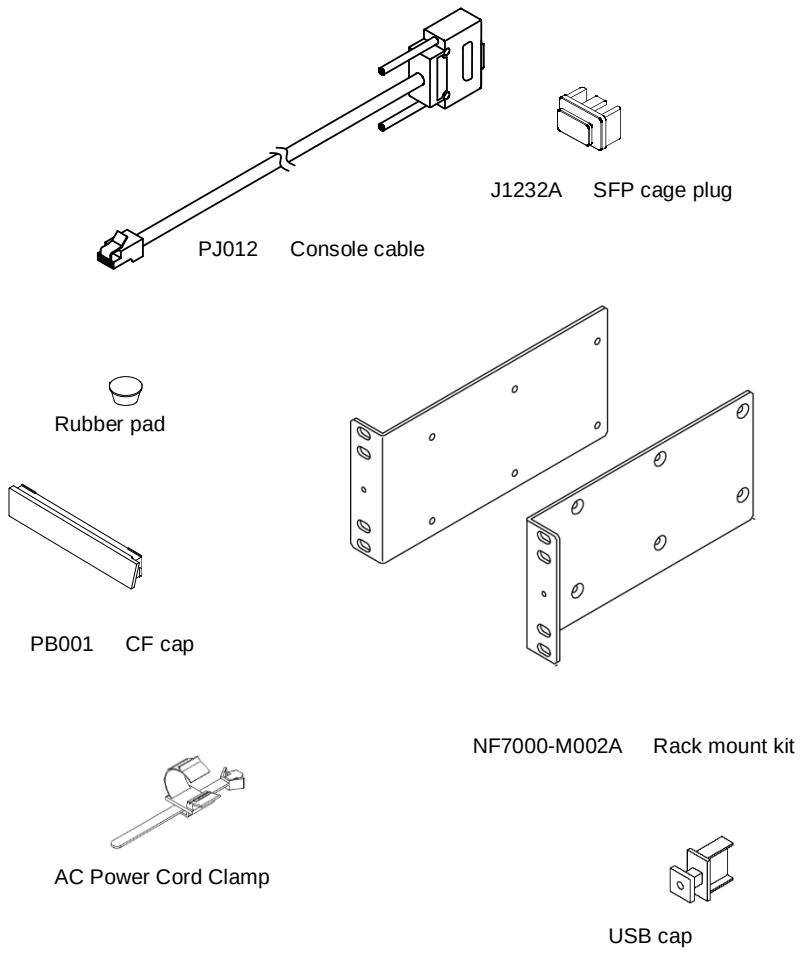

Figure 1.2.1-1 Appearance of standard accessories

1.2.2 Main unit overview

(1) **PureFlow GSX**

This is a traffic shaper equipped with an SFP+ compliant Network port.

An SFP+ module and SFP module can be connected to the Network port. PureFlow GSX provides a transfer bandwidth of 1 Gbit/s and supports up to 4,096 scenarios as standard. The transfer bandwidth and the number of scenarios can be expanded to 10 Gbit/s and 40,000 scenarios, respectively, by using the license key options.

(2) **150W AC Input Power Supply Unit**

This is a power supply unit used to supply power from an AC power supply to the NF7101C.

This power supply unit supports hot swapping, and up to two units can be installed in the main unit. A power supply redundancy system is available when two power supply units are installed. One power supply unit is installed as standard.

(3) **FAN unit**

This fan unit is used to cooling for dissipating heat inside the NF7101C.

This fan unit supports hot swapping, and two units are installed as standard. The NF7101C can therefore continue operating even if one of the units fails.

1.2.3 Option list

The following option parts and license key options are provided for the NF7101C.
Table 1.2.3-1 shows the optional parts and Table 1.2.3-2 shows the license key options.

Table 1.2.3-1 Option list

Model name	Item name	Remark
NF7000-U001A	150W AC Input Power Supply Unit	An AC power cord is not supplied. Purchase the AC power cord shown below separately. AC Power Cord Clamp is supplied as standard.
NF7000-U002A	FAN Unit	For replacement in case of a failure of the fan unit.
NY02001A	SFP+ Module (10GBASE-SR)	An optical module for 10 Gbit/s MMF*1 compliant with IEEE Std 802.3-2012
NY02002A	SFP+ Module (10GBASE-LR)	An optical module for 10 Gbit/s SMF*2 compliant with IEEE Std 802.3-2012
NY02003A	SFP Module (10/100/1000BASE-T)	A module for 1 Gbit/s twisted pair cable compliant with IEEE Std 802.3-2012
NY02004A	SFP Module (1000BASE-SX)	An optical module for 1 Gbit/s MMF compliant with IEEE Std 802.3-2012
NY02005A	SFP Module (1000BASE-LX)	An optical module for 1 Gbit/s SMF compliant with IEEE Std 802.3-2012
NY98001A	CF card (1GB)	A CF card whose operation is guaranteed by Anritsu Networks
NY01001A	AC Power Cord for USA	Purchase the AC power cord separately when purchasing the main unit or power supply unit.
NY01004A	AC Power Cord for Japan	

*1: Multimode Fiber
*2: Single-mode Fiber

Table 1.2.3-2 License key options

Model name	Item name	Remark
NF7101-L004A	2G Bandwidth License	Expands the transfer bandwidth per port from 1 Gbit/s to 2 Gbit/s.
NF7101-L004B	4G Bandwidth License	Expands the transfer bandwidth per port from 1 Gbit/s to 4 Gbit/s.
NF7101-L004C	10G Bandwidth License	Expands the transfer bandwidth per port from 1 Gbit/s to 10 Gbit/s.
NF7101-L004D	2G to 4G Bandwidth License	Expands the transfer bandwidth per port from 2 Gbit/s to 4 Gbit/s.
NF7101-L004E	2G to 10G Bandwidth License	Expands the transfer bandwidth per port from 2 Gbit/s to 10 Gbit/s.
NF7101-L004F	4G to 10G Bandwidth License	Expands the transfer bandwidth per port from 4 Gbit/s to 10 Gbit/s.
NF7101-L005A	10k Scenario License	Expands the number of usable scenarios from 4,096 to 10,000.
NF7101-L005B	40k Scenario License	Expands the number of usable scenarios from 4,096 to 40,000.
NF7101-L005C	10k to 40k Scenario License	Expands the number of usable scenarios from 10,000 to 40,000.

The following specifications apply if no license options are used:

Bandwidth: 1 Gbit/s

Number of scenarios: 4096

For details about scenarios and how to use the license key, read “Command Reference (NF7101-W007E)” and “Configuration Guide (NF7101-W008E)”.

1.2.4 Overview of options

(1) **NF7000-U001A 150W AC Input Power Supply Unit**

This is an AC input power supply unit with a capacity of 150 W. This unit can be installed in the NF7101C. Purchase this option when configuring a power supply redundancy system, or if the power supply unit fails.

(2) **NF7000-U002A FAN Unit**

This is a fan unit for cooling the NF7101C. This unit can be installed in the NF7101C. If the fan unit fails, replace it with this option.

(3) **NY02001A SFP+ module (10GBASE-SR)**

This is a 10GBASE-SR SFP+ module that can be connected to the Network port of the NF7101C. This module complies with IEEE Std 802.3-2012 and allows up to 10 Gbit/s communication. (The actual transfer bandwidth of the NF7101C depends on the installed Bandwidth License. If a Bandwidth License is not installed, the maximum communication speed is 1 Gbit/s even if an SFP+ module is used.) Model name "NY02001A" is printed on the back surface label of the SFP+ module.

(4) **NY02002A SFP+ module (10GBASE-LR)**

This is a 10GBASE-LR SFP+ module that can be connected to the Network port of the NF7101C. This module complies with IEEE Std 802.3-2012 and allows up to 10 Gbit/s communication. (The actual transfer bandwidth of the NF7101C depends on the installed Bandwidth License. If a Bandwidth License is not installed, the maximum communication speed is 1 Gbit/s even if SFP+ module is used.) Model name "NY02002A" is printed on the back surface label of the SFP+ module.

(5) **NY02003A SFP module (10/100/1000BASE-T)**

This is a 10BASE-T/100BASE-TX/1000BASE-T SFP module that can be connected to the Network port of the NF7101C. This module complies with IEEE Std 802.3-2008 and allows up to 1 Gbit/s communication. Model name "NY02003A" is printed on the back surface label of the SFP module.

(6) **NY02004A SFP module (1000BASE-SX)**

This is a 1000BASE-SX SFP module that can be connected to the Network port of the NF7101C. This module complies with IEEE Std 802.3-2012 and allows up to 1 Gbit/s communication. Model name "NY02004A" is printed on the back surface label of the SFP module.

(7) **NY02005A SFP module (1000BASE-LX)**

This is a 1000BASE-LX SFP module that can be connected to the Network port of the NF7101C. This module complies with IEEE Std 802.3-2012 and allows up to 1 Gbit/s communication. Model name "NY02005A" is printed on the back surface label of the SFP module.

(8) NY98001A CF card (1GB)

This is a compact flash drive that can be inserted in the CF card slot of the NF7101C. It can be used to update the NF7101C firmware and upload and download the configuration settings. Model name "NY98001A" is printed on the back surface label of the CF card.

(9) NF7101-L004A 2G Bandwidth License

This expands the transfer bandwidth per Network port from 1 Gbit/s to 2 Gbit/s. License certificate will be provided with the purchase.

(10) NF7101-L004B 4G Bandwidth License

This expands the transfer bandwidth per Network port from 1 Gbit/s to 4 Gbit/s. License certificate will be provided with the purchase.

(11) NF7101-L004C 10G Bandwidth License

This expands the transfer bandwidth per Network port from 1 Gbit/s to 10 Gbit/s. License certificate will be provided with the purchase.

(12) NF7101-L004D 2G to 4G Bandwidth License

This expands the transfer bandwidth per Network port from 2 Gbit/s to 4 Gbit/s. NF7101-L004A 2G Bandwidth License must be installed in advance. License certificate will be provided with the purchase.

(13) NF7101-L004E 2G to 10G Bandwidth License

This expands the transfer bandwidth per Network port from 2 Gbit/s to 10 Gbit/s. NF7101-L004A 2G Bandwidth License must be installed in advance. License certificate will be provided with the purchase.

(14) NF7101-L004F 4G to 10G Bandwidth License

This expands the transfer bandwidth per Network port from 4 Gbit/s to 10 Gbit/s. NF7101-L004B 4G Bandwidth License, or NF7101-L004A 2G Bandwidth License and NF7101-L004D 2G to 4G Bandwidth License must be installed in advance. License certificate will be provided with the purchase.

(15) NF7101-L005A 10k Scenario License

This expands the number of scenario sources used for bandwidth control from 4,096 to 10,000. License certificate will be provided with the purchase.

(16) NF7101-L005B 40k Scenario License

This expands the number of scenario sources used for bandwidth control from 4,096 to 40,000. License certificate will be provided with the purchase.

(17) NF7101-L005C 10k to 40k Scenario License

This expands the number of scenario sources used for bandwidth control from 10,000 to 40,000. NF7101-L005A 10k Scenario License must be installed in advance. License certificate will be provided with the purchase.

1.3 Part names and functions

Figure 1.3-1 shows a front view of the NF7101C indicating the part names.
Figure 1.3-2 shows a rear view of the NF7101C indicating the part names.
Figure 1.3-2 shows the NF7101C with the power supply unit installed in power supply slot 0, a power supply blank panel covering power supply slot 1, and fan units installed in fan slots 0 and 1.

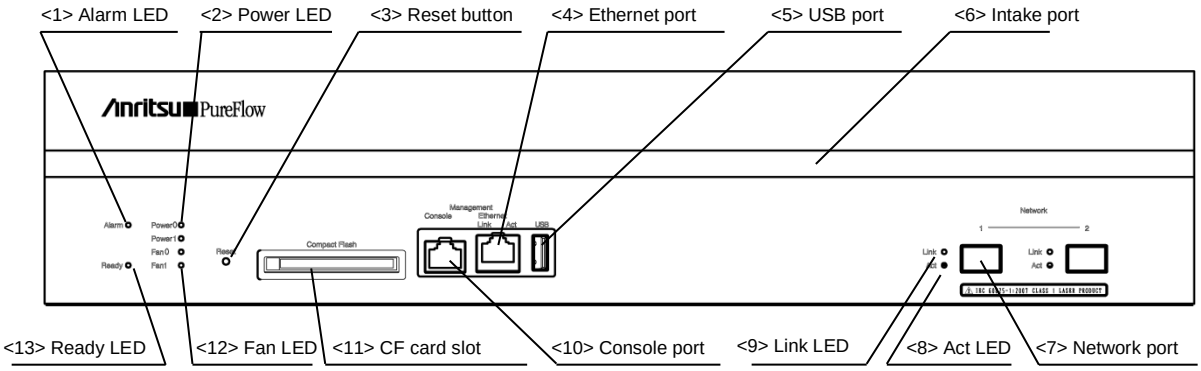

Figure 1.3-1 Front view of device with part names

<1> Alarm LED

This LED indicates that an error has occurred in the NF7101C.

Indication	Meaning
Red (on)	A device error has occurred.
Off	The NF7101C is operating normally.

<2> Power LED

These LEDs indicate the status of the power supply unit.
Power0 indicates the state of the power supply unit installed in power slot 0, and Power1 indicates the state of the power supply unit installed in power slot 1.

Indication	Meaning
Green (on)	Power is being supplied to the power supply unit and the NF7101C is operating normally.
Green (blinking)	A power supply unit error has occurred. This includes cases where a Power Supply Unit is installed in the corresponding slot but AC power is not being supplied.
Off	A power supply unit is not installed in the corresponding slot.

<3> Reset button

Press the reset button to reboot the NF7101C.
Use the tip of a ballpoint pen to press the reset button. Do not use a pencil or mechanical pencil because the lead might remain inside the NF7101C and cause fails.

<4> Ethernet port

This port is used as an interface for managing the NF7101C.
This port is an Auto-MDIX port and supports 10BASE-T, 100BASE-TX, and 1000BASE-T.
It is a local port of the NF7101C and is separate from the Network port.

Link LED: Indicates the link status of the Ethernet port.

Indication	Meaning
Green (on)	The port is linked at 1000BASE-T.
Orange (on)	The port is linked at 100BASE-TX or 10BASE-T.
Off	The port is not linked to the network device connected to the port.

Act LED: Indicates the packet transmission/reception status of the Ethernet port.

Indication	Meaning
Green (blinking)	The port is transmitting or receiving packets.
Off	The port is not transmitting or receiving packets.

⚠ CAUTION

Do not connect the Ethernet port to a telecommunications network such as a Public Switched Telephone Network. Incorrect connection may result in failure of the communication line or device.

<5> USB port

This port is used for maintenance work such as configuration settings and downloading, uploading and executing software. It is recommended to use a USB memory whose operation is confirmed by Anritsu Networks.
For details, see Section 2.8 “Connecting and removing the USB memory”.

<6> Intake port

This is used for intaking air to cool down the NF7101C.
For details about the open space around the NF7101C required for cooling the NF7101C, see Section 2.3 “Open space”.

<7> Network port

The Network port is used to connect the line whose traffic is to be controlled.
This port complies with SFP+ and SFP, and supports the following:

- SFP+ module
  10GBASE-SR (NY02001A)
  10GBASE-LR (NY02002A)
- SFP module
  10/100/1000BASE-T (NY02003A)
  1000BASE-SX (NY02004A)
  1000BASE-LX (NY02005A)

⚠ CAUTION

Do not connect the Network port to a telecommunications network such as a Public Switched Telephone Network. Incorrect connection may result in failure of the communication line or device.

<8> Act LED

Indicates the packet transmission/reception status of the Network port.

Indication	Meaning
Green (blinking)	The port is transmitting or receiving packets.
Green (blinking in synchronized with Link LED)	Reboot* is required.
Off	The port is not transmitting or receiving packets.

*: When the module used for the Network port is changed from SFP to SFP+ and vice versa, the NF7101C must be rebooted.

<9> Link LED

Indicates the link status of the Network port.

Indication	Meaning
Green (on)	Link status of the Network port
Green (blinking in synchronized with Act LED)	Reboot* is required.
Off	The port is not linked to the network device connected to the port.

*: When the module used for the Network port is changed from SFP to SFP+ and vice versa, the NF7101C must be rebooted.

<10> Console port

This port is used as an interface for managing the NF7101C.
This is used for displaying and setting the operation parameters of the NF7101C.
For details, see Section 3.3 “Settings”.

⚠ CAUTION

Do not connect the Console port to a telecommunications network such as a Public Switched Telephone Network. Incorrect connection may result in failure of the communication line or device.

<11> CF card slot

This port is used for maintenance work such as configuration settings and downloading, uploading and executing software. Use the CF card supplied by Anritsu Networks as an option.
For details, see Section 2.7 “Inserting and removing the CF card”.

<12>Fan LED

These LEDs indicate the status of the fans in the NF7101C.
Fan 0 indicates the status of the fan unit connected to Fan slot 0, and Fan1 indicates the status of the fan unit connected to Fan slot 1.

Indication	Meaning
Green (on)	The fan of the FAN Unit is operating normally.
Green (blinking)	An error has occurred in the fan of the FAN Unit. Or, the corresponding FAN Unit is not installed.

<13>Ready LED

Indicates the operational status of the entire device.

Indication	Meaning
Green (blinking at 1 second intervals)	The NF7101C is starting up or is undergoing self diagnosis.
Green (on)	The NF7101C is operating normally.
Off	No power is being supplied to the NF7101C or an error has been detected in the NF7101C.

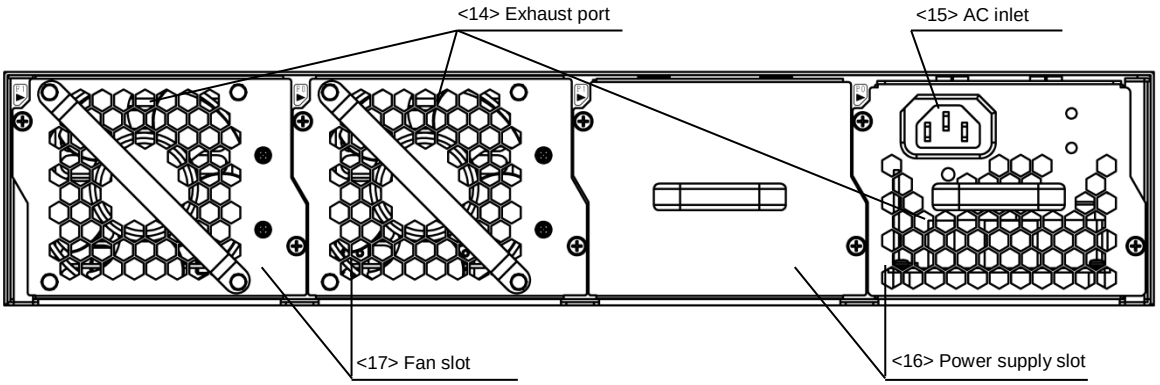

Figure 1.3-2 Rear view of device with part names

<14>Exhaust port

This is used fan exhausting air to cool the NF7101C.

For details about the open space around the NF7101C required for cooling the NF7101C, see Section 2.3 “Open space”.

⚠ CAUTION

Do not block the exhaust port. Otherwise, the NF7101C may overheat, stop, or fail.

<15>AC inlet

This is used for connecting the AC power cord.

⚠ WARNING

Use the dedicated AC power cord. Use of other types of AC power cord may result in electric shock, heat generation, smoke, or ignition, leading to fire, injury, or death.

<16>Power supply slot

Install the power supply unit and power unit blank panel in power supply slots 0 and 1. Before shipment, a power supply unit is installed in power supply slot 0, and power supply slot 1 is covered by a power unit blank panel.

Use the power unit blank panel when not installing a power supply unit in a power supply slot. Remove this panel when adding a power supply unit. Store the removed power unit blank panel for future use.

Model name	Item name
NF7000-U001A	150W AC Input Power Supply Unit
NF7000-M001A	Power Unit Blank Panel

<17>Fan slot

Install the following fan unit in fan slots 0 and 1. In shipment, fan units are installed in both fan slots 0 and 1.

Model name	Item name
NF7000-U002A	FAN Unit

(Blank page)

Chapter 2 Unpacking and Installation

This chapter describes how to unpack and install the NF7101C.

2.1 Unpacking 2-2
2.1.1 How to unpack the NF7101C 2-2
2.1.2 Checking the contents of the box 2-3
2.2 Selecting an installation location 2-4
2.3 Open space 2-5
2.4 Installing the main unit 2-6
2.4.1 Placing the NF7101C on a table 2-6
2.4.2 Mounting the NF7101C in a 19-inch rack 2-7
2.5 Connecting the Network port 2-11
2.5.1 Cleaning SFP module and the optical fiber cable 2-12
2.5.2 Installing and removing SFP module 2-14
2.5.3 Connecting and removing the optical fiber cable 2-18
2.6 Connecting and removing the UTP cable 2-22
2.6.1 Connect the UTP cable 2-22
2.6.2 Removing the UTP cable 2-23
2.7 Inserting and removing the CF card 2-24
2.8 Connecting and removing the USB memory 2-27
2.9 Daily inspection 2-29
2.10 Packing 2-30
2.10.1 How to pack the NF7101C 2-30
2.10.2 Re-transportation 2-32

2.1 Unpacking

2.1.1 How to unpack the NF7101C

(1) Open the packing box.

(2) Pull out the top box from the packing box.

(3) Insert your hands in the area indicated by A and securely support the NF7101C by holding both the side surfaces and the bottom.

(4) Pull out the NF7101C from the top.

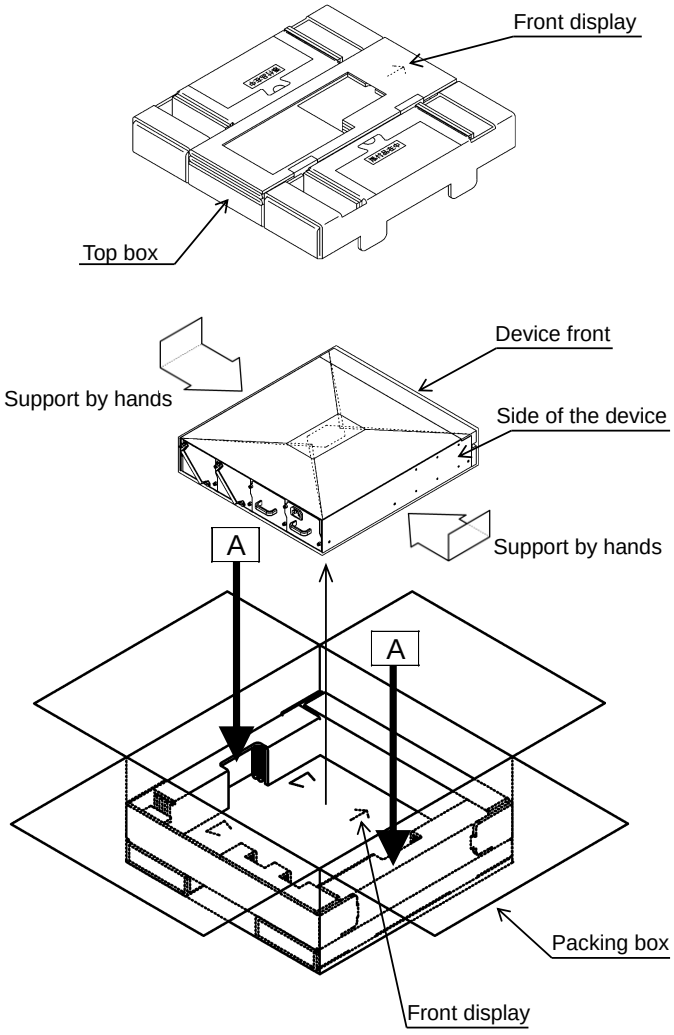

Figure 2.1.1-1 How to unpack the NF7101C

⚠ CAUTION

Hold on the both sides of the NF7101C. Do not hold protrusions or grooves. They are slippery and you might drop the NF7101C, causing injury or damaging the device.

2.1.2 Checking the contents of the box

Remove the contents from the packing box, and check that the following items are included. If any item is missing or has been damaged during transportation, contact your dealer immediately.

Keep the packing materials such as the packaging box for future transportation.

Table 2.1.2-1 Contents list

Model name	Item name	Qty.	Remark
NF7101C	Traffic shaper (device main unit)	1	
NF7000-U001A	150W AC Input Power Supply Unit	1	(Pre-installed)
NF7000-M001A	Power Unit Blank Panel	1	(Pre-installed)
NF7000-U002A	FAN Unit	2	(Pre-installed)
J1232A	SFP cage plug	2	(Pre-installed)
PB001	CF cap	1	For CF card slot (Pre-installed)
–	USB cap	1	For USB port (Pre-installed)
NF7000-M002A	Rack Mount Kit	1 unit	Rack mount angle: 2 pieces Flat head screw (M4): 8 pieces Pan head screw (M5): 4 pieces
NF7101-W005A	Operation Manual CD-ROM	1	CD-ROM (this document, Command Reference, Configuration Guide)
NF7101-W009A	Safety Manual	1	Booklet
PJ012	Console cable	1	
–	Rubber pad	4	
–	AC Power Cord Clamp	1	
–	Getting Started Guide	1	Paper
–	Unpacking instructions	1	Paper
–	Export announcement card	1	Paper

2.2 Selecting an installation location

Avoid the following places when installing the NF7101C:

- In places of direct sunlight
- In dusty places
- Outdoors
- In liquids, such as water, oil, or organic solvents, and medical fluids, or places where these liquids may adhere
- In salty air or in place chemically active gases (sulfur dioxide, hydrogen sulfide, chlorine, ammonia, nitrogen dioxide, or hydrogen chloride etc.) are present
- In places where high-intensity static electric charges or electromagnetic fields are present
- In places where abnormal power voltages (high or low) or instantaneous power failures occur
- In places where condensation occurs
- In the presence of lubricating oil mists
- In places at an altitude of more than 2,000 m
- In the presence of frequent vibration or mechanical shock

⚠ WARNING

Installing the NF7101C in a place such as those above might cause the device to fall over or fall, or cause an electric shock, fire, or failure.

⚠ CAUTION

When carrying the NF7101C, hold the bottom firmly in your hands. Holding anywhere other than the bottom might damage the device, cause the injury.

2.3 Open space

Allow space of 90 mm at the front and rear of the NF7101C to ensure that the inside the NF7101C is cool and to space for the cables as shown in Figure 2.3-1. The NF7101C has a cooling fan in the back. The fan takes air in from the front and exhausted air from the rear of the NF7101C.

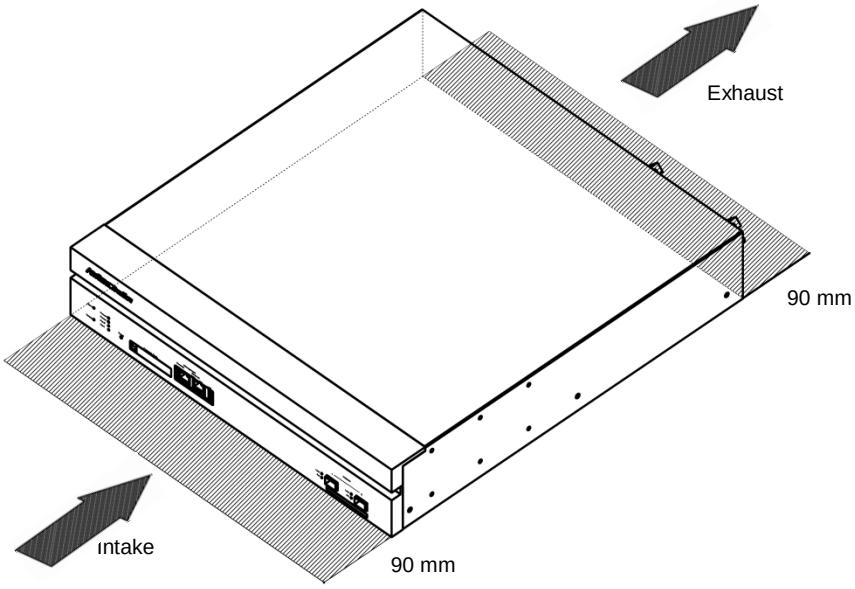

Figure 2.3-1 Open space

⚠ CAUTION

Do not block the intake port and exhaust port. Allow space shown in Figure 2.3-1. If the space around the NF7101C is not sufficient, the NF7101C will overheat, causing failure.

2.4 Installing the main unit

2.4.1 Placing the NF7101C on a table

Do not place any object on the NF7101C. Also avoid stacking devices (other devices, including the same model, can be mounted directly on or under the NF7101C when using rack mounting).
To improve operability when using the NF7101C on a table, you can attach the supplied rubber pad. Attach the rubber pad as follows:

(1) Wipe off any dirt on the rubber pad areas on the bottom of the NF7101C (the punch marks in Figure 2.4.1-1) with a cloth.

(2) Remove the adhesive protection seal on the supplied rubber pad, and affix the pad (the punch marks in Figure 2.4.1-1).

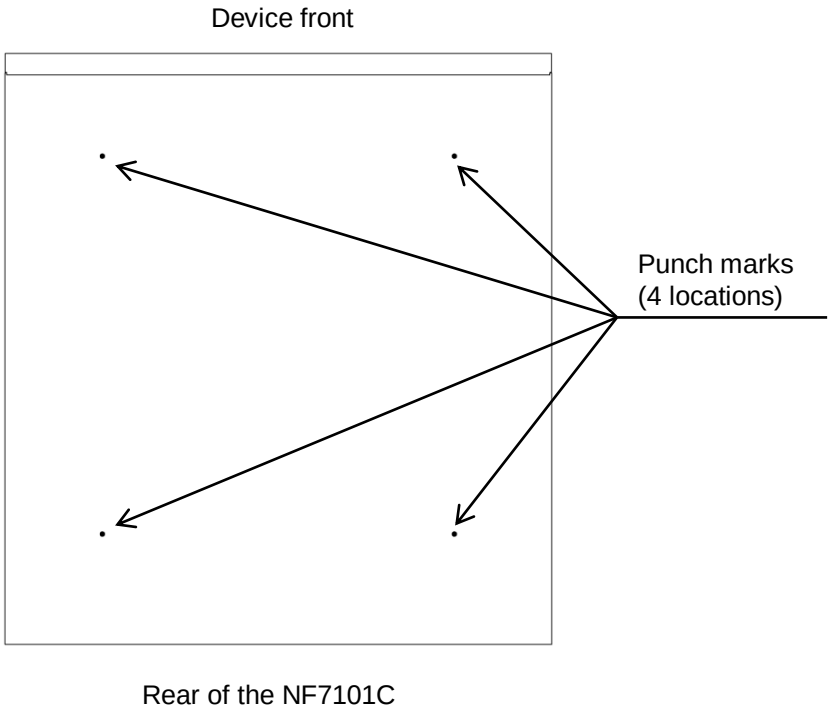

Figure 2.4.1-1 Punch marks for rubber pad

⚠ CAUTION

Do not use the NF7101C in a vertical position. The NF7101C will overheat, causing failure. Always use it in a horizontal position.

2.4.2 Mounting the NF7101C in a 19-inch rack

When mounting the NF7101C in a 19-inch rack, use the rack mount kit. The installation holes of the rack mount kit comply with the IEC and EIA (only for wide pitch).

⚠ CAUTION

1. **Do not install NF7101C in a place where the operating ambient temperature exceeds 40ºC. Otherwise, the device may fail.**
2. **Be careful not to block the air flow from the front to the back of NF7101C (see Figure 2.3-1 "Open space"). Otherwise, NF7101C may fail.**
3. **If anything other than the specified rack mount hardware or screws are used, or if the installation procedure shown below is not followed, NF7101C might fall off the rack, causing injury or device failure.**
4. **When installing multiple units of NF7101C on a rack with other devices, make sure that the total current capacity does not exceed the capacity of the power circuit, lines, and overcurrent protective device provided on the rack. Add up all the current rating values listed on the nameplates of all the devices connected to the power circuit, and determine the current capacity of the power circuit so that it will not result in an overload. The rated current value of one unit of NF7101C is 1.5 A at 100 V. The power circuit breaker may trip and system failure may occur due to lack of power capacity.**

⚠ WARNING

Use the dedicated AC power cord when installing NF7101C. Use of other types of AC power cord may result in heat generation, leading to fire.

When connecting NF7101C to a power circuit, always provide proper protective grounding. Provide unbroken and secure protective grounding from the main power supply to the AC power cord of NF7101C. Otherwise, electric shock may occur.

Mount the NF7101C in a rack according to the following procedure:

(1) Mounting the NF7101C on the rack mount kit

Attach the rack mount angles to the NF7101C. Use the supplied flat head screws M4 (four on each side). Figure 2.4.2-1 shows how to attach the angles.

Note:

Use the mounting screws that total of 8 by 4 on each side.

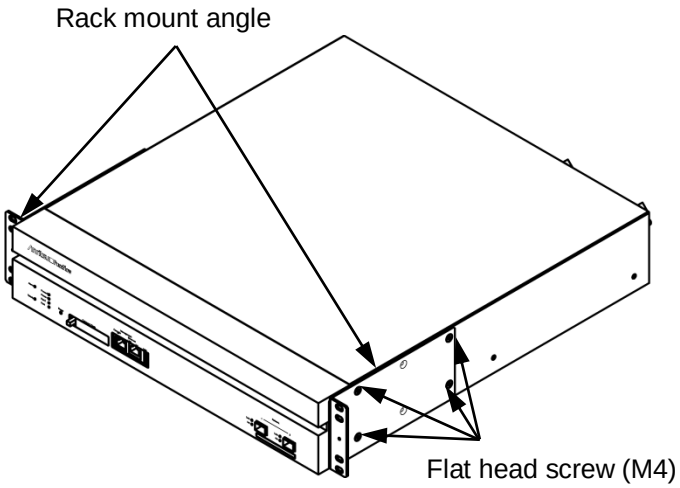

Figure 2.4.2-1 Attaching the rack mount angles

The rack mount angles are possible to adjust by selecting the screw hole the mounting position in the front-to-rear direction.
Choose the installation holes that match your environment.

<1> Standard position of flush against the mounting surface (Figure 2.4.2-2)
<2> 65 mm rearward from the standard position (Figure 2.4.2-3)
<3> 65 mm forward from the standard position (Figure 2.4.2-4)

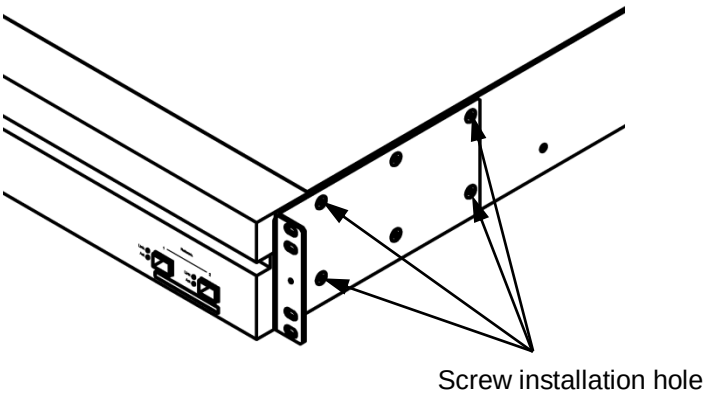

Figure 2.4.2-2 Installation hole position (standard position)

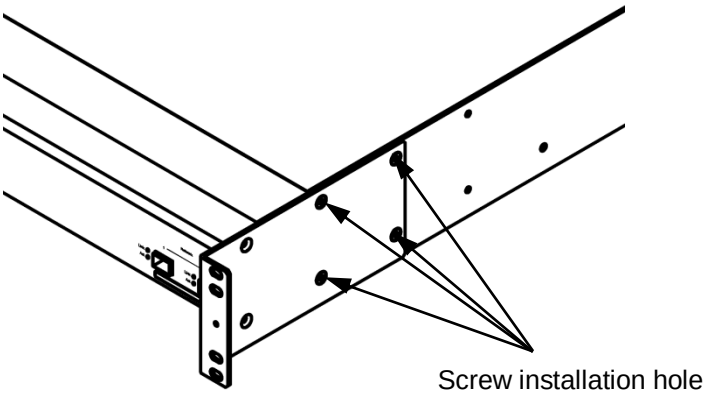

Figure 2.4.2-3 Installation hole position (rear position)

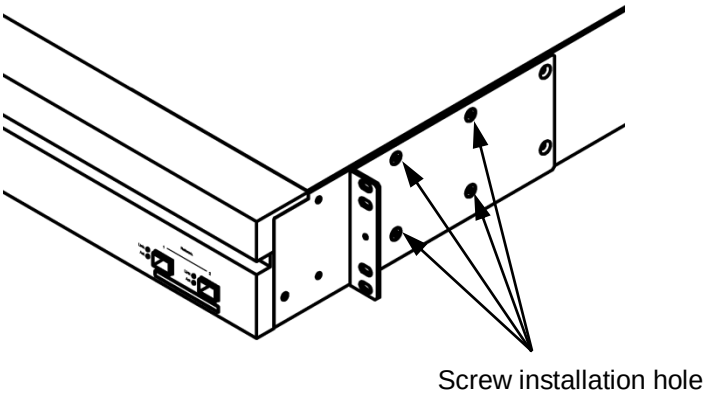

Figure 2.4.2-4 Installation hole position (front position)

⚠ CAUTION

Use the supplied screws. Using incorrect screws may cause the device to fall off, cause failure.

Use four supplied installation screws on each side.
The installation holes vary depending on the installation position. Choose the appropriate position.

(2) Mounting and securing the NF7101C

Mount the NF7101C on the rack. Pan head screws (M5) are attached for installation to the rack. If the rack is not compatible with the M5 screws, please use appropriate screws. Figure 2.4.2-5 shows an example of mounting the NF7101C on the rack.

Note:

Screwed the mounting screws that total of four by two on each side.

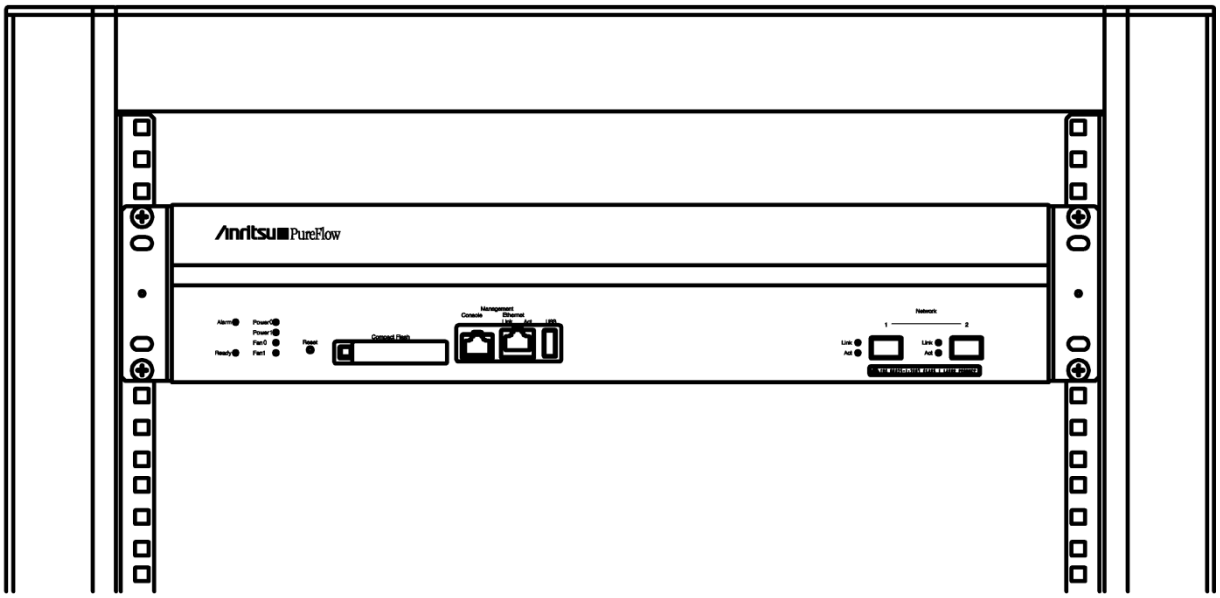

Figure 2.4.2-5 Mounting the NF7101C on the rack

⚠ CAUTION

Do not hold the protrusions or grooves on the front and rear sides of the NF7101C. They are slippery and you might drop the device, causing injury.

2.5 Connecting the Network port

The Network port of the NF7101C is compatible with SFP+/SFP.
The SFP+/SFP (described as SFP hereafter) module is a transceiver module that enables hot swapping. The external view of the SFP module is shown below:

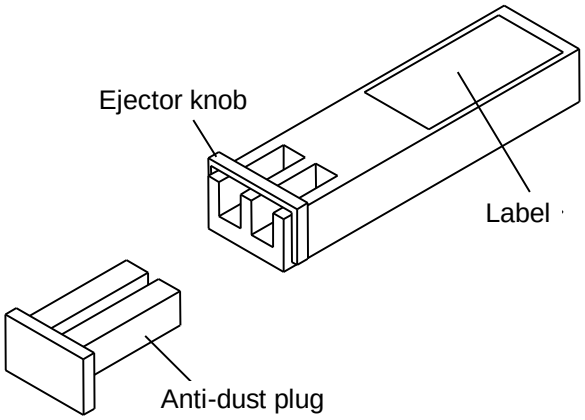

Figure 2.5-1 External view of SFP module (for LC connector)

⚠ CAUTION

Use the optional SFP module. Using the incorrect optional SFP module is out of warranty. In addition, may cause failure.

Use the adapted SFP module to the communication standard of the opposing device and cable. Using the incorrect adapted SFP module is out of warranty. In addition, may cause failure.

Note:

Please refer to the Appendix A "I/O Interface Specifications" for details such as the communication standard and the type of cable and SFP module.

2.5.1 Cleaning SFP module and the optical fiber cable

Using an optical fiber cable with dust or dirt attached to the ferrule end surface may deteriorate the performance. Before using the NF7101C, sufficiently clean the optical fiber cable to be connected and the ferrule end surface of the SFP module.

2.5.1.1 Cleaning SFP module

Before installing the SFP module in the Network port, clean the optical cable fitting surfaces of SFP module and the ferrule end surfaces. For cleaning the ferrule end surface inside SFP module, use a commercially-available stick cleaner.
An example of a commercially-available stick cleaner is shown below:

<Procedure>

(1) Insert the stick cleaner (for a ϕ1.25 LC connector) in straight as shown in the figure below:

(2) Lightly push the stick cleaner until the stick touch the end lightly and rotate it 4 to 5 times clockwise.
* Holding the support part allows the load to be transmitted easily.

(3) Pull out the stick while rotating it clockwise.

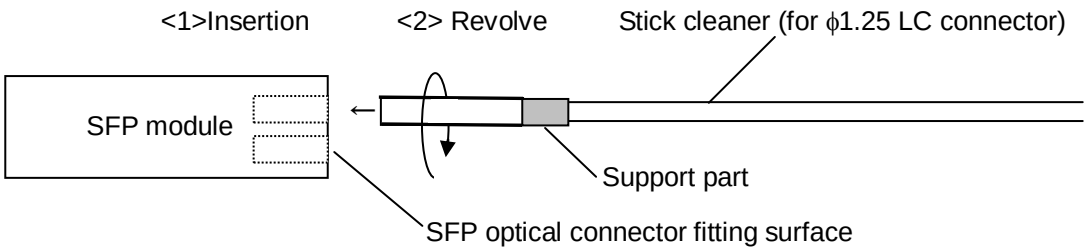

Figure 2.5.1.1-1 Example of the use of stick cleaner

⚠ CAUTION

When cleaning and checking the ferrule end surface of the SFP module, remove it from the NF7101C. Laser light may enter your eyes, causing eye injury.

2.5.1.2 Cleaning the optical fiber cable

Before cleaning the optical fiber cable, clean the ferrule end surface. For cleaning the ferrule of the optical fiber cable, use a commercially-available ferrule cleaner.
An example of a commercially-available ferrule cleaner is shown below:

<Procedure>

(1) Pull the ferrule cleaner lever to pull out the cleaning surface.

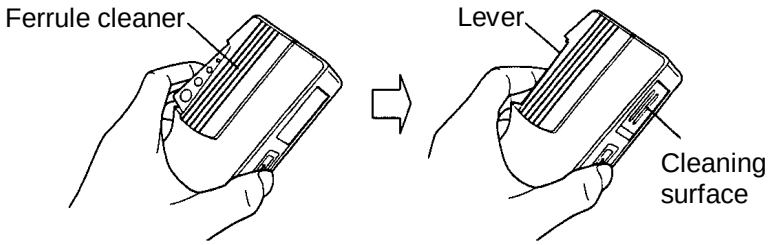

Figure 2.5.1.2-1 Example of the ferrule cleaner (1)

(2) Hold the lever, push the ferrule end surface of the optical connector toward the cleaning surface, and scrub it in one direction.

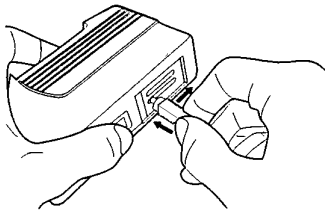

Figure 2.5.1.2-2 Example of the ferrule cleaner (2)

Precautions when cleaning

1. Do not use already-used cleaning surface.
2. Do not use a cotton-tipped stick since fibers might become attached to the ferrule.
3. Put a cap on the unused connector.

For details, see the manual of ferrule cleaner.

⚠ CAUTION

Do not look into the connector portion of the optical fiber cable. Laser light may be emitted from the connected device, which might enter your eyes, causing eye injury.

2.5.2 Installing and removing SFP module

2.5.2.1 Installing SFP module

The SFP module can be inserted and removed without turning off the NF7101C. At this time, handle the SFP module with the SFP dust-proof plug.

<Procedure>

(1) Remove the SFP cage plug of the Network port to which the SFP module will be inserted.

***Note*:**

Keep SFP cage plug for future use.

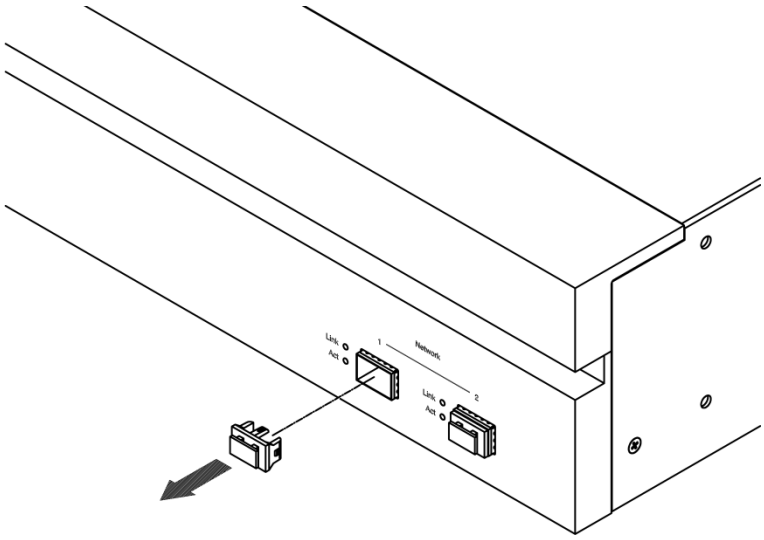

Figure 2.5.2.1-1 Removing the SFP cage plug

(2) Install the SFP module into the Network port with the latch downward and the "ejector knob" fold in the SFP module. Insert the SFP module securely.

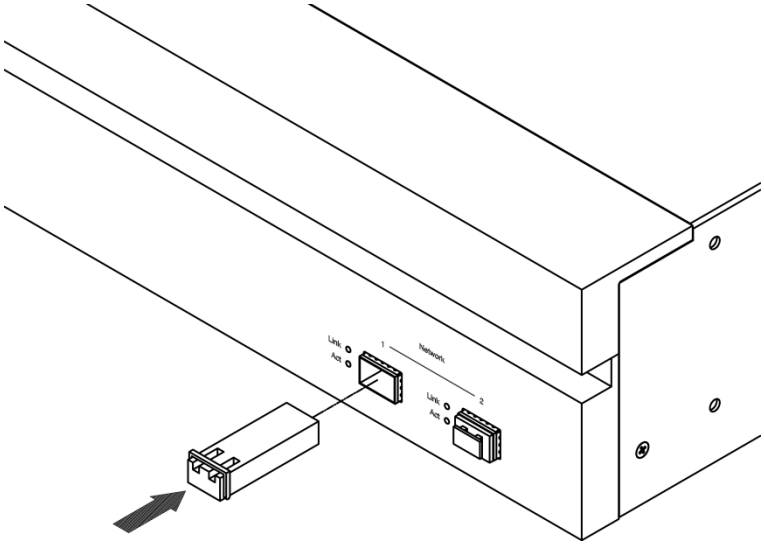

Figure 2.5.2.1-2 Inserting SFP module

⚠ CAUTION

Keep the SFP module ejector knob folded when inserting the SFP module. If the SFP module is inserted while the ejector knob not folded, the module may not be inserted securely.

2.5.2.2 Removing SFP module

<Procedure>

(1) Tilt the SFP module ejector knob forward, and pinch the ejector knob to pull out the SFP module.
At this time, pull out the knob straight toward the SFP module.
If it is pulled out at an angle, the SFP module lock will not be removed and SFP module may be damaged.

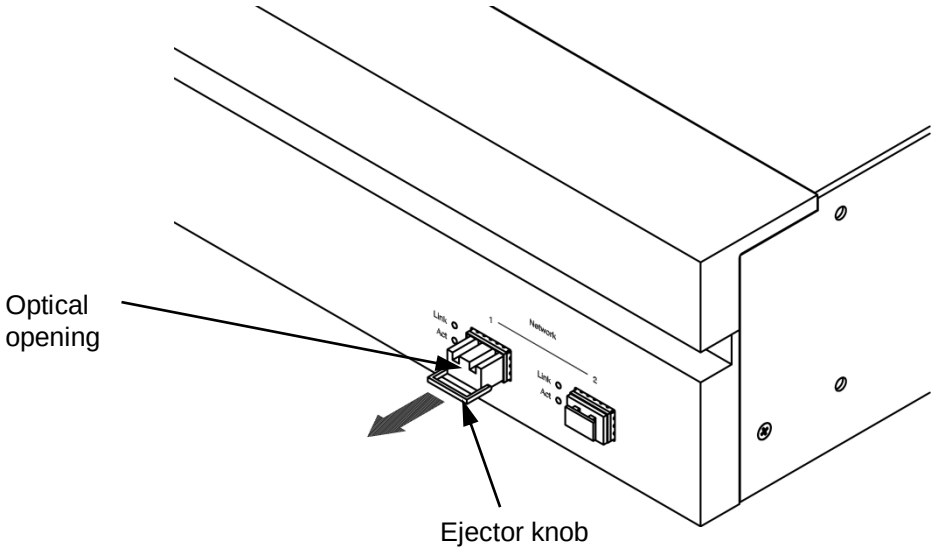

Figure 2.5.2.2-1 Removing SFP module

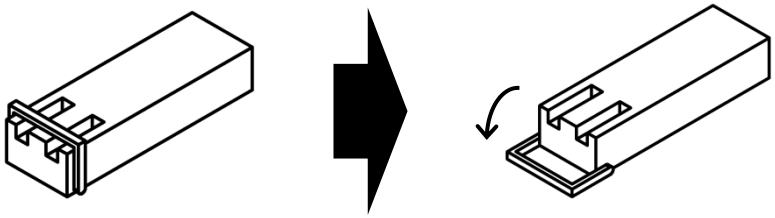

Figure 2.5.2.2-2 Operation of SFP module ejector knob forward

⚠ CAUTION

1. **Do not look into the SFP module optical opening. Laser light may enter your eyes, causing eye injury. When inserting and removing the SFP module, laser light may be emitted from the optical opening.**
2. **Do not insert and remove the SFP module with the optical fiber cable connected. Insertion and removal with the optical fiber cable connected may damage the SFP module and optical fiber cable.**
3. **When an optical fiber cable is not connected to the SFP module, attach the dust-proof plug to the SFP module. Dust might enter the SFP module. This may cause failure.**
4. **Do not touch the electrical connector of the SFP module. Touching the connector may cause failure.**

2.5.3 Connecting and removing the optical fiber cable

2.5.3.1 Connecting the optical fiber cable

<Procedure>

(1) Remove the dust-proof plug of the SFP module to be connected to the optical fiber cable.

Note:

Keep dust-proof plug for future use.

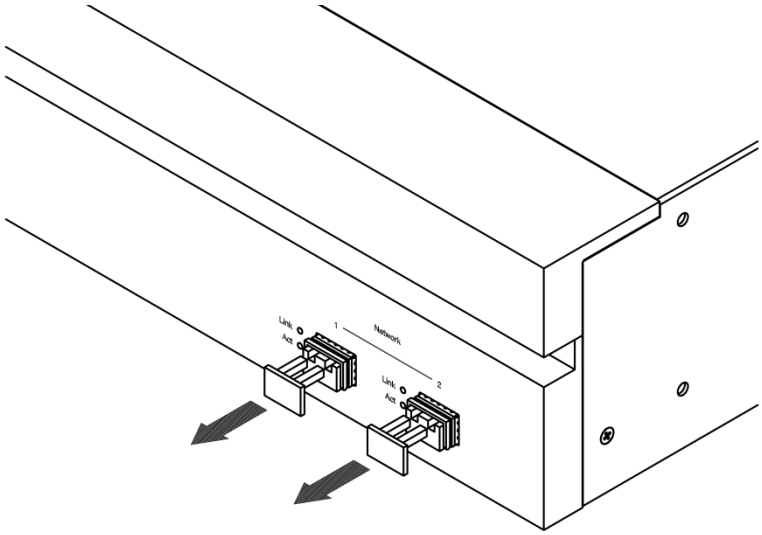

Figure 2.5.3.1-1 Removing the dust-proof plug

⚠ CAUTION

When the optical fiber cable is not connected to the SFP module, attach the dust-proof plug to the SFP module. Dust might enter the SFP module. This may cause failure.

(2) Remove the ferrule dust caps of the optical fiber cable LC connector.

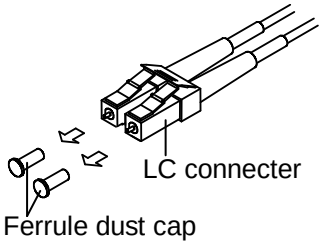

Figure 2.5.3.1-2 Removing the ferrule dust cap

(3) Connect the optical fiber cable into the SFP module. Push it until engage the latch.

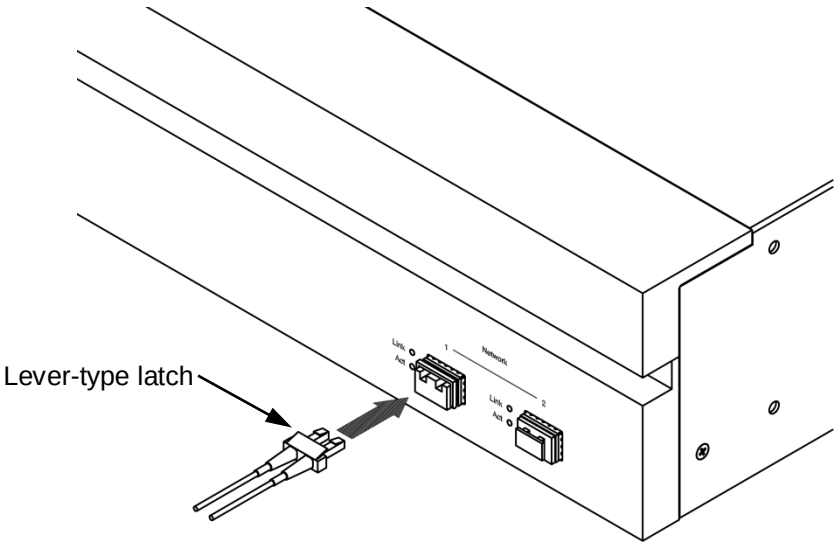

Figure 2.5.3.1-3 Connect the optical fiber cable

2.5.3.2 Removing the optical fiber cable

<Procedure>

(1) Push the lever-type latch of the optical fiber cable with your fingers to disengage the latch, and gently remove the cable.

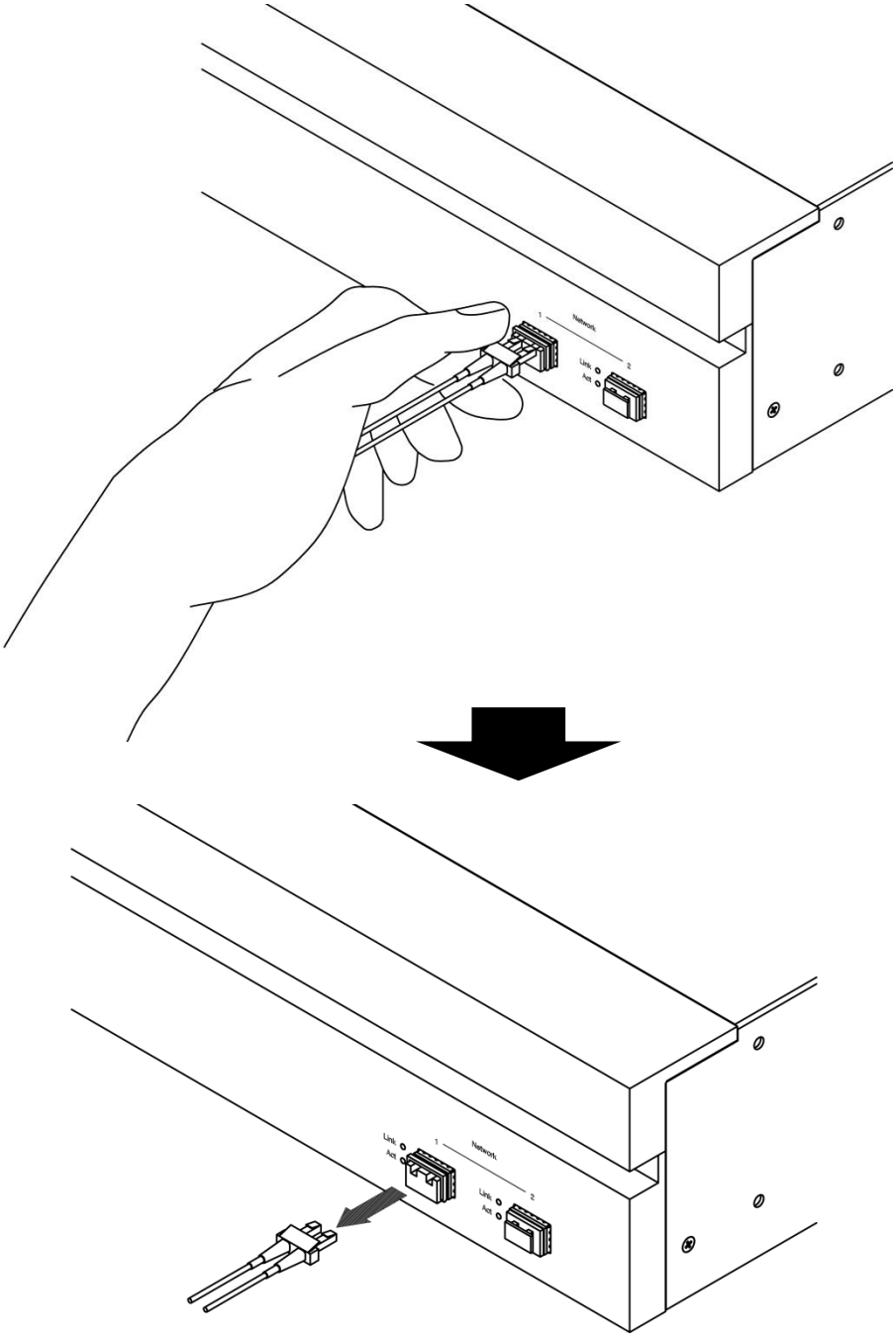

Figure 2.5.3.2-1 Removing the optical fiber cable

(2) Attach the dust-proof plug of the SFP module.

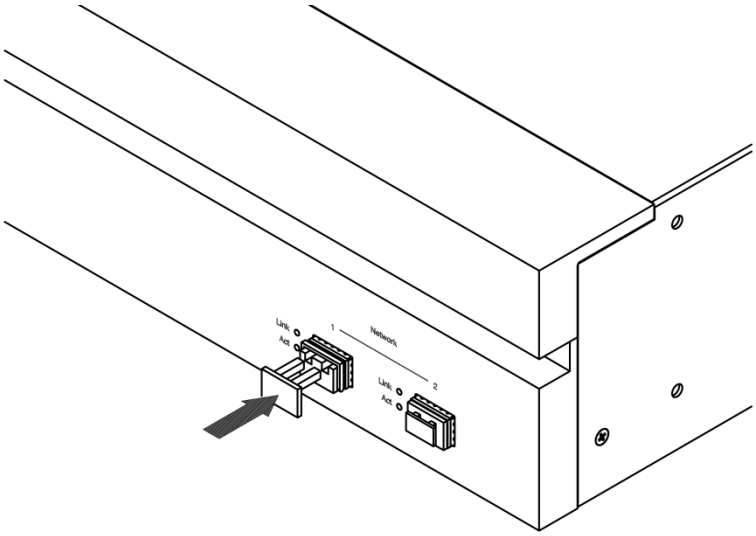

Figure 2.5.3.2-2 Attaching the dust-proof plug

⚠ CAUTION

When the optical fiber cable is not connected to the SFP module, attach the dust-proof plug to the SFP module. Dust might enter the SFP module. This may cause failure.

2.6 Connecting and removing the UTP cable

2.6.1 Connect the UTP cable

Insert the UTP cable into the Ethernet port for management.
Push in the cable until it latches.

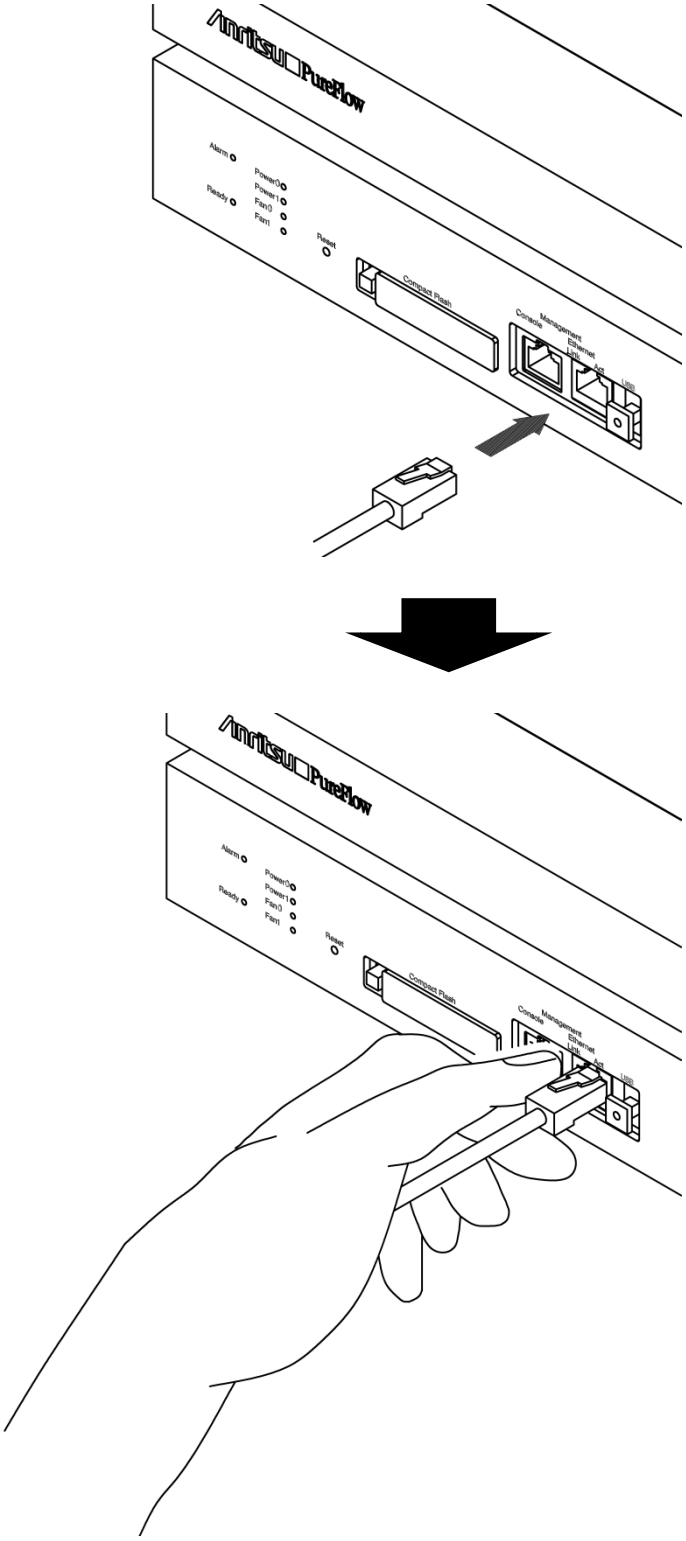

Figure 2.6.1-1 Inserting the UTP cable

2.6.2 Removing the UTP cable

Push the latch of the UTP cable with your fingers to disengage the latch, and gently remove the cable.

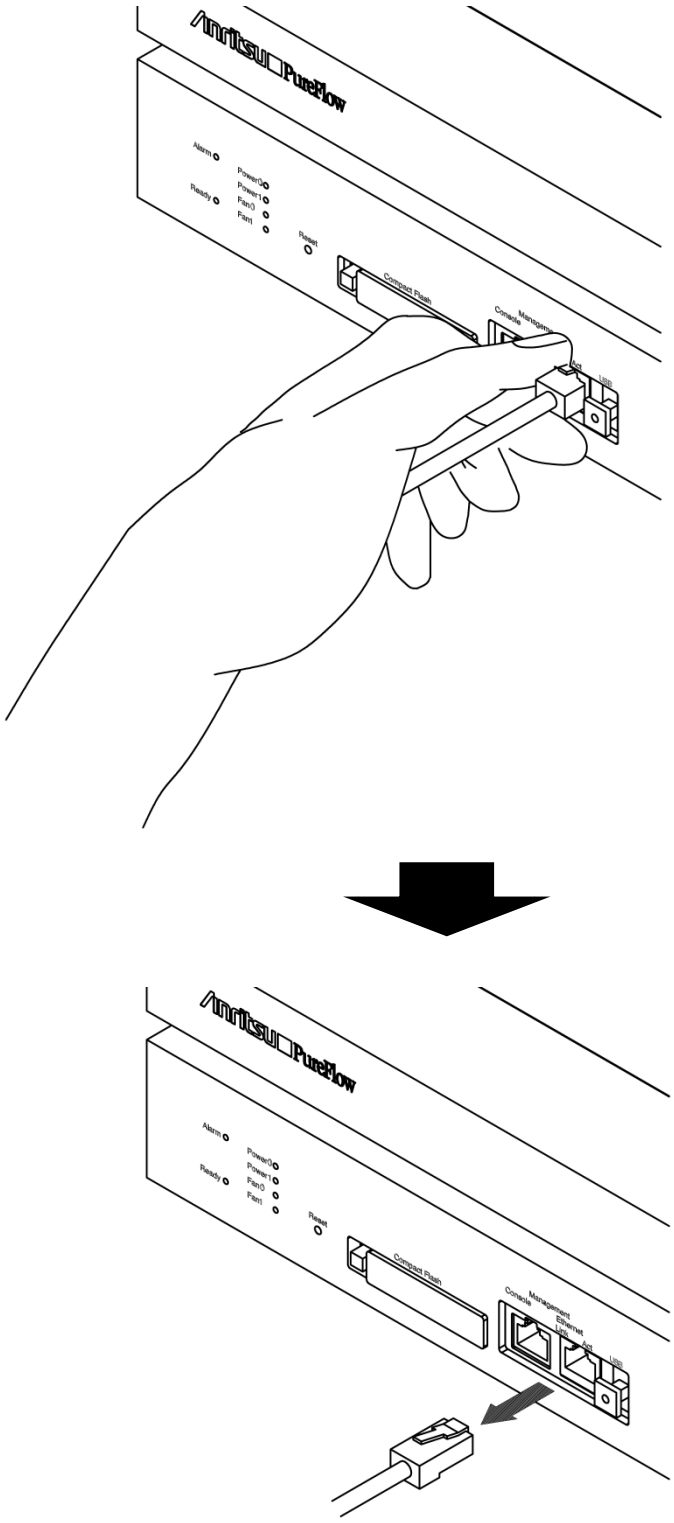

Figure 2.6.2-1 Removing the UTP cable

2.7 Inserting and removing the CF card

The CF card is used for setting parameters and downloading, uploading and executing software. For details, read the attached "Command Reference (NF7101-W007E)" and "Configuration Guide (NF7101-W008E)".

Use the optional CF card. Use of incorrect CF card may cause failure. Format the CF card in FAT16 or FAT32 format.

<Procedure for inserting CF card>

(1) Remove the CF cap.

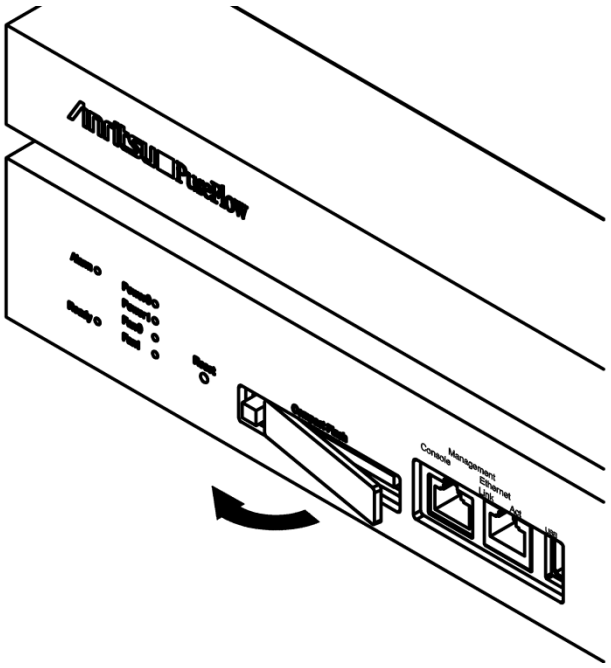

Figure 2.7-1 Removing the CF cap

(2) Push the CF card until the ejector pops out.

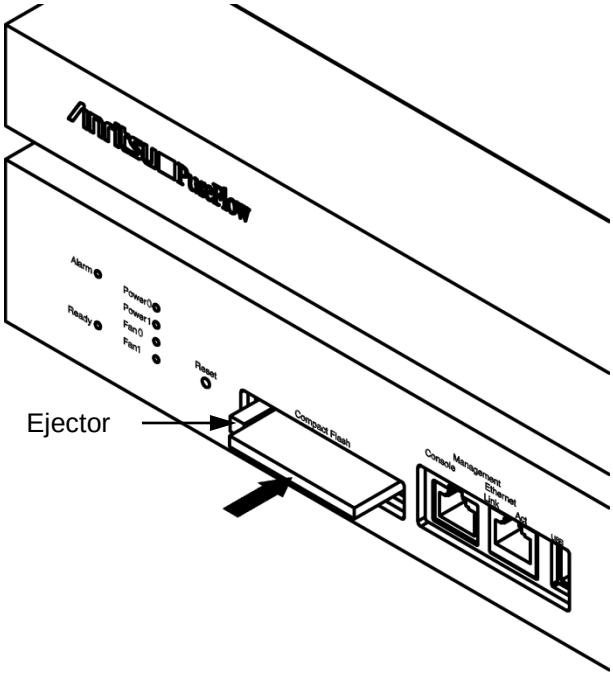

Figure 2.7-2 Inserting the CF card

<Procedure for removing the CF card>

(1) Push the ejector to remove the CF card.

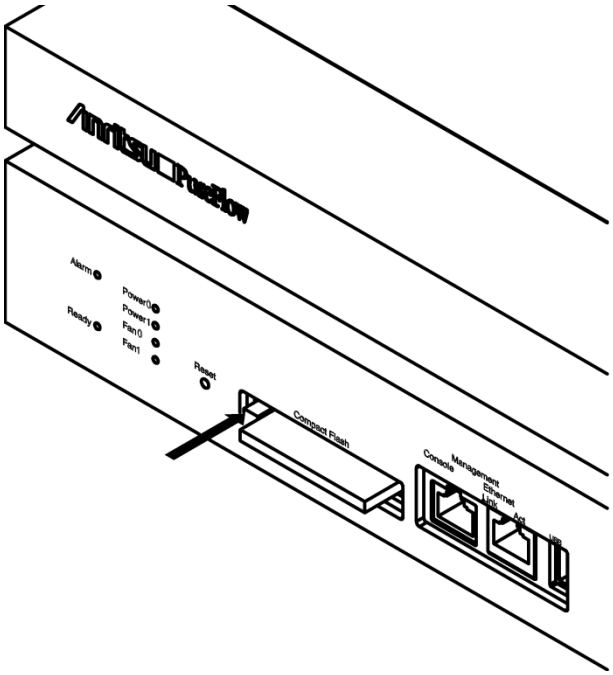

Figure 2.7-3 Removing the CF card

(2) Attach the CF cap.

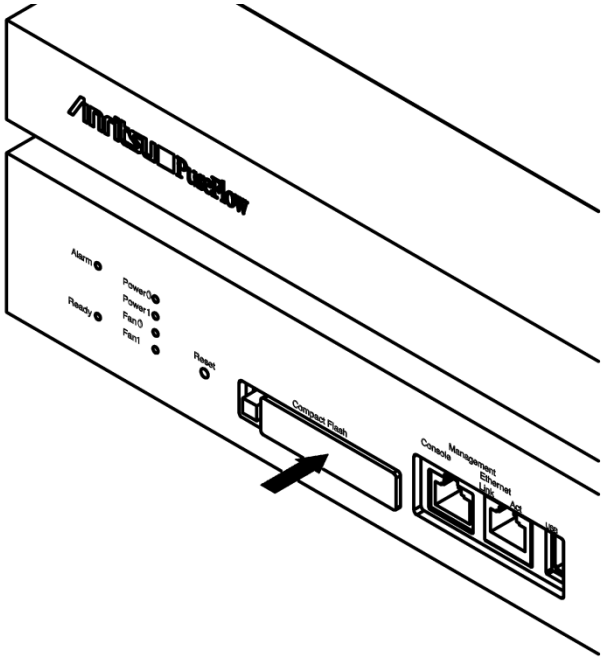

Figure 2.7-4 Attaching the CF cap

For details about how to use the CF card, read “Command Reference (NF7101-W007E)” and “Configuration Guide (NF7101-W008E)”.

2.8 Connecting and removing the USB memory

The USB memory is used for setting parameters and downloading, uploading and executing software. For details, read the attached "Command Reference (NF7101-W007E)" and "Configuration Guide (NF7101-W008E)".

Table 2.8-1 shows the USB memory whose operation is confirmed. To save important information in the USB memory, it is recommended to verify the USB memory. Format the USB memory in FAT16 or FAT32 format.

Table 2.8-1 USB memory whose operation is confirmed

Item number	Manufacturer	Model name
1	Transcend Information, Inc.	TS4GJF300

<Procedure for connecting the USB memory>

(1) Remove the USB cap.

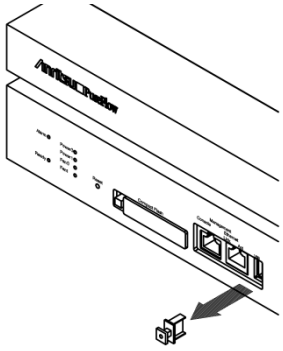

Figure 2.8-1 Removing the USB cap

(2) Paying attention to the connector direction, insert the USB memory right to the back.

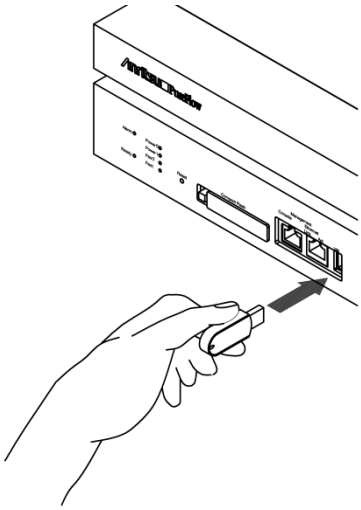

Figure 2.8-2 Connecting the USB memory

<Procedure for removing the USB memory>

(1) Pinch the USB memory and gently remove it.

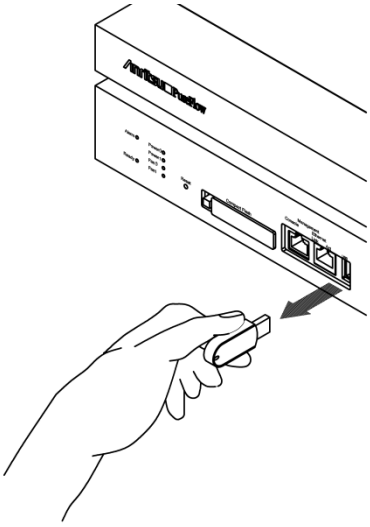

Figure 2.8-3 Removing the USB memory

(2) Attach the USB cap.

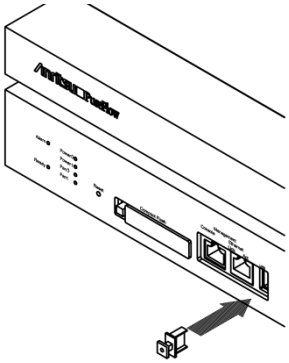

Figure 2.8-4 Attaching the USB cap

For details about how to use the USB memory, read “Command Reference (NF7101-W007E)” and “Configuration Guide (NF7101-W008E)”.

2.9 Daily inspection

(1) Check the Alarm LED for device errors.
If the Alarm LED lights in red, check the Power LED and Fan LED.
If these LEDs are blinking, check the units.
If these units have failed, replace it.

⚠ CAUTION

If the Alarm LED does turn off even after the units are replaced, or if the cause is unknown, turn off the power immediately, and contact "Contact us" Service and Sales office on the CD-ROM.

(2) Clean dust from around the NF7101C.
Regularly clean dust accumulated on the power plug.

⚠ WARNING

- **Dust accumulated on the power plug may cause a fire.**
- **Do not block the air intake port and exhaust port. Blocking the air holes will increase the internal temperature of the device, possibly causing a failure.**

2.10 Packing

2.10.1 How to pack the NF7101C

Place it in the packing materials used for delivery.

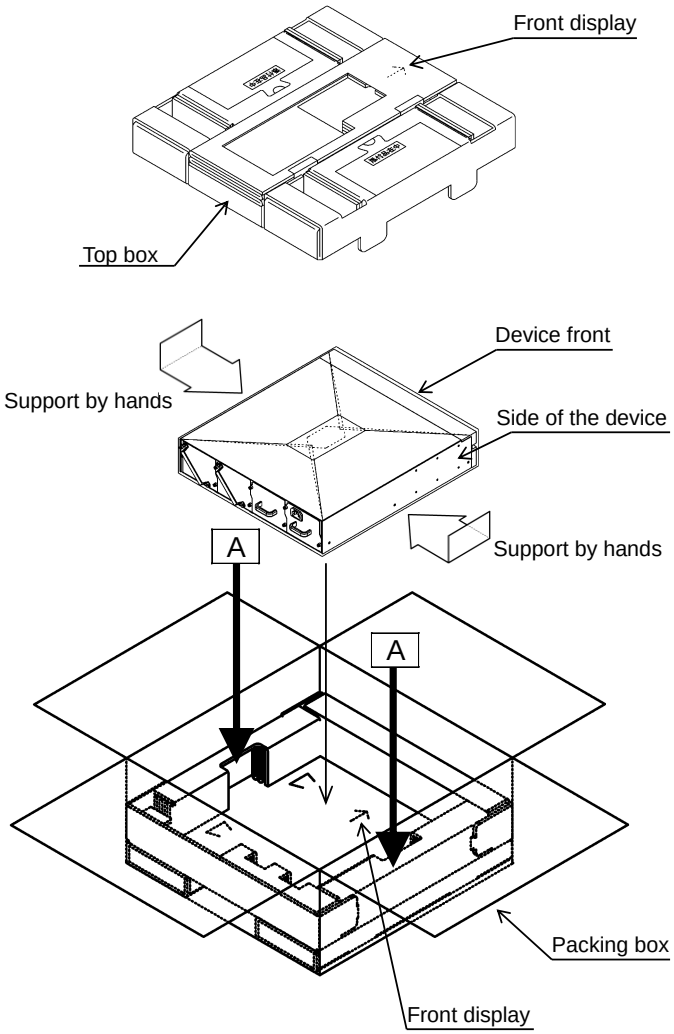

Figure 2.10.1-1 How to pack the NF7101C

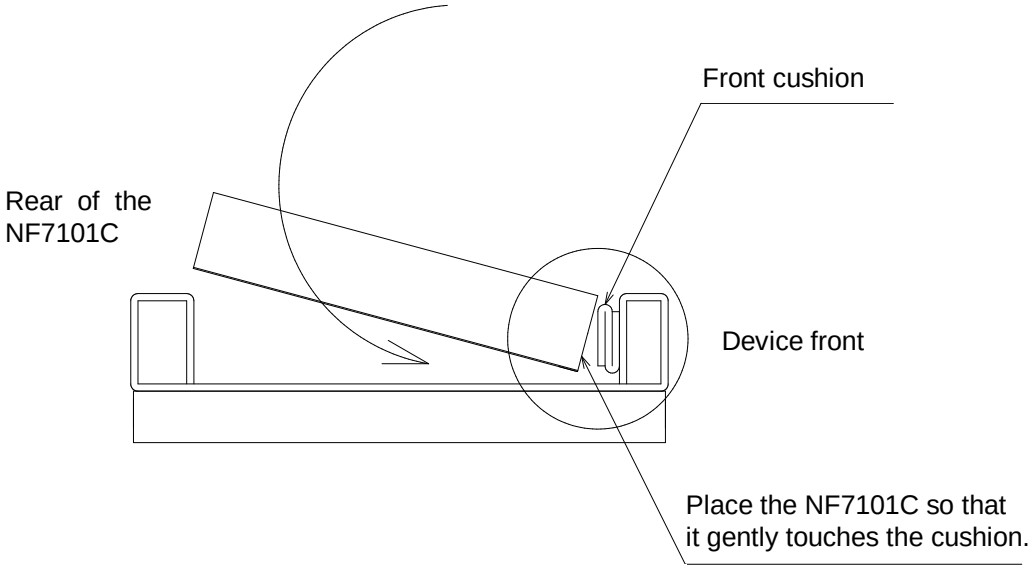

Figure 2.10.1-2 Side view of packing box

(1) Support the NF7101C by holding both the side surfaces and the bottom.

(2) Place the NF7101C into the packing box so that your hands holding as described in step (1) can enter the area indicated by A, and it so that the NF7101C front gently hits the cushion at the front of the packing box.

(3) Align the direction with the packing box front indication and gently set the top box into the packing box.

(4) Close the packing box.

⚠ CAUTION

1. **Do not pack the NF7101C with the SFP/SFP+ module or cable connected. Otherwise, the SFP/SFP+ module, cable and the NF7101C may cause failure.**
2. **Insert the SFP cage plug in the Network port. If not dust might enter the SFP cage connector. This may cause failure.**
3. **Hold on the both sides of the NF7101C. Do not hold protrusions or grooves. They are slippery and you might drop the NF7101C, causing injury or damaging the device.**

2.10.2 Re-transportation

For re-transport of the NF7101C, contain the packing material in the packing box.

Keep the packing materials such as the packing box for future re-transportation.

⚠ CAUTION

Re-transporting the device without using the packing materials used for delivery may cause failure.

Chapter 3 Startup and Shutdown

This chapter describes how to start up and set the power supply of the NF7101C.

3.1 Supplying power 3-2
3.2 Power supply redundancy 3-6
3.3 Settings 3-7
3.3.1 Connecting the console 3-7
3.4 Turn off the AC power 3-9

3.1 Supplying power

(1) Checking the power supply and power cord

Check the rating of the power supply for this device and of the AC power cord to be used. Be sure to observe the rating of this device and AC power cord for use.
For the rating of the power supply for this device and of the AC power cord, refer to "Appendix B.3 Power".

⚠ WARNING

Be sure to use the dedicated AC power cord within the rating when installing this device. Supply of power that exceeds the rating may result in insulation breakdown or heat generation, leading to fire.

(2) Connecting the AC power cord

Insert the AC power cord into the AC inlet of the power supply unit at the back of the NF7101C.
To construct a power supply redundancy system, install two power supply units and insert AC power cords into both AC inlets.

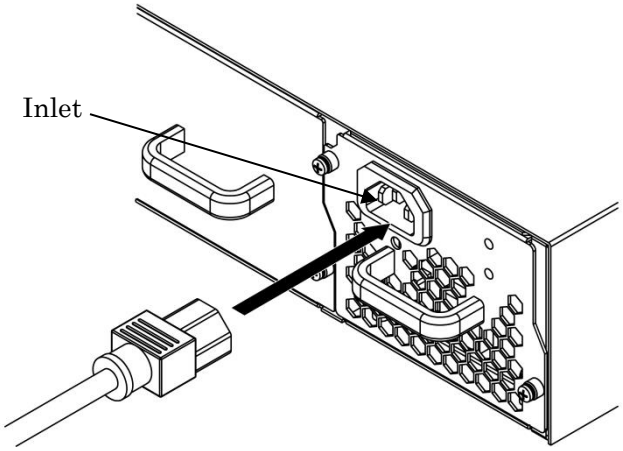

Figure 3.1-1 Connecting the AC power cord (inlet)

(3) Turning on the power

When the AC power cord is plugged into the power outlet, power is supplied to the NF7101C. Figure 3.1-2 shows an example of using the AC power cord (NY01004A).

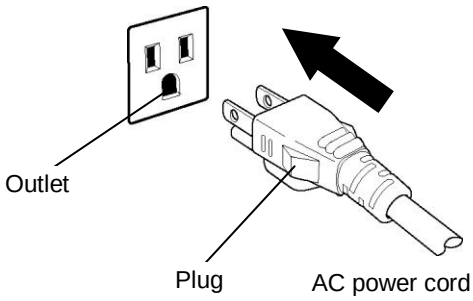

Figure 3.1-2 Connecting the AC power cord (outlet)

⚠ WARNING

The power of the NF7101C is turned off when the AC power cord is disconnected.

Pay attention to the installation location of the NF7101C and to the AC power cord layout so that the power cable can be disconnected from the power outlet easily.
Difficulty in turning the power off may result in leading to fire, or death.

(4) Clamping the AC power cord

The supplied AC Power Cord Clamp (hereafter referred to as "Cord Clamp") prevents the AC power cord disconnected by accident.
Push the protrusion of the Cord Clamp into the circular hole at the bottom of the AC inlet of the power supply unit, and secure the Cord Clamp to the power supply unit

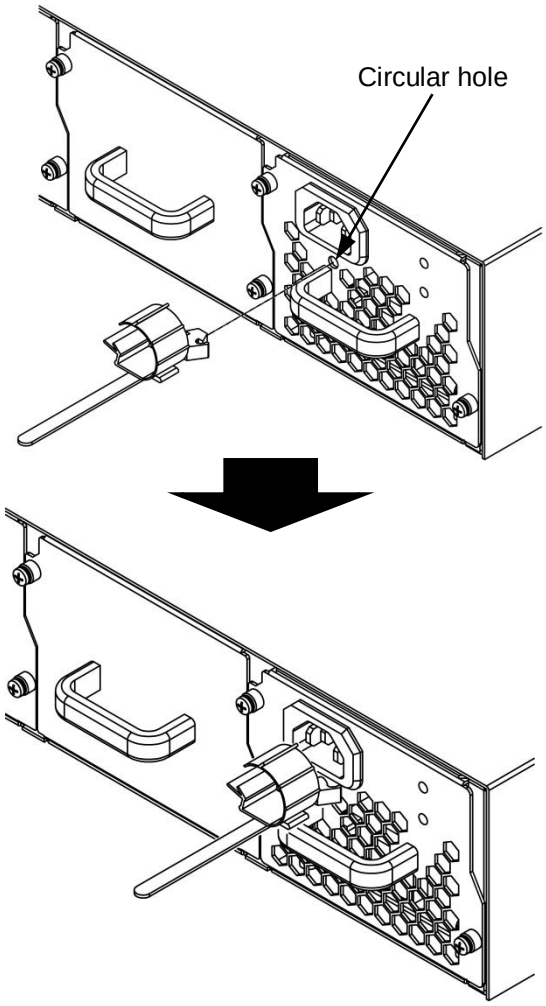

Figure 3.1-3 Clamping the AC power cord

⚠ WARNING

The power of the NF7101C is turned off when the AC power cord is disconnected.

Install a circuit breaker or switch that can turn the power off when using the AC Power Cord Clamp. Difficulty in turning the power off may result in leading to fire, or death.

(5) Clamping the AC power cord

The AC power cord can be clamped by using the Cord Clamp that was installed as described in step (4).
To clamp the cable, install the clamp head on the base of the AC power cord connector. Install the AC power cord connector on the power supply inlet while sliding the clamp head on the slide portion.

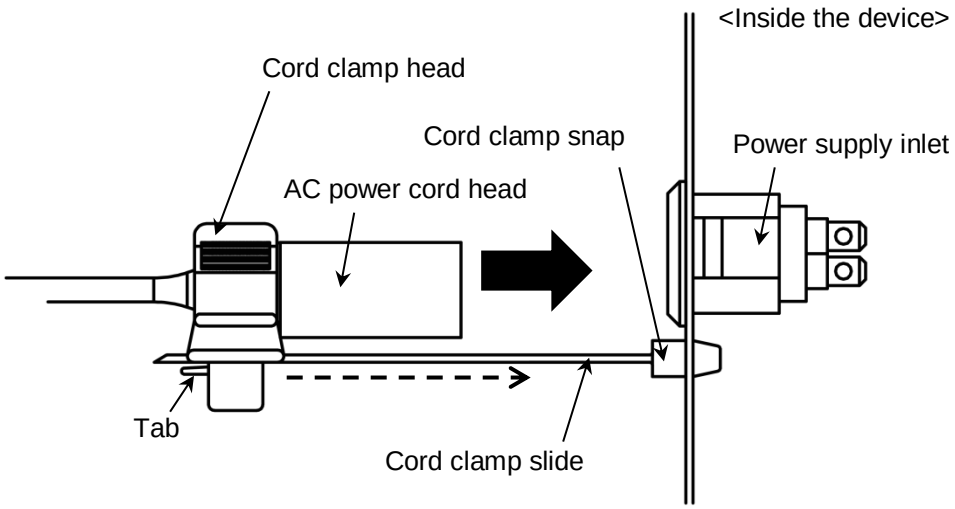

Figure 3.1-4 AC power cord clamp

3.2 Power supply redundancy

The NF7101C operates on one power supply unit. However, power supply redundancy can be constructed by using two power supply units. If one power supply unit fails (power is cut off), this construct enables the NF7101C to operate on the other power supply unit.

Note:

Power LEDs Indicate error when the Power Supply Unit is installed in the slot but AC power is not being supplied.

⚠ WARNING

Do not disassemble the power supply unit. Otherwise, an electric shock may occur, causing injury or death.

3.3 Settings

The NF7101C has two management ports: one is the (serial) console port and another is the Ethernet port (10/100/1000BASE-T) for remote access. These are used to display and set the operation parameters of the NF7101C.

3.3.1 Connecting the console

You can connect a terminal to the NF7101C to display and set the operation parameters of the NF7101C. When connecting a terminal to the console port, use the supplied console cable PJ012 (RJ-45/DB-9 adapter cable). When using a PC as the terminal, it must support VT100 terminal emulation.

The console must satisfy the following communication conditions:

Communication method	: Asynchronous
Communication speed	: 9,600 bit/s (factory default setting)
Character length	: 8 bits
Parity	: None
Stop length	: 1 bit
Flow control	: None

The communication speed can be changed by the command **set console baudrate**. Specify the communication speed of the terminal emulation software according to the set communication speed.

⚠ CAUTION

The connector type of the console port and Ethernet port is the same. Be careful not to connect a network cable to the console port by mistake. Incorrect connection may cause failure.

<Procedure>

(1) Connect the RJ-45 side of the supplied console cable to the console port.

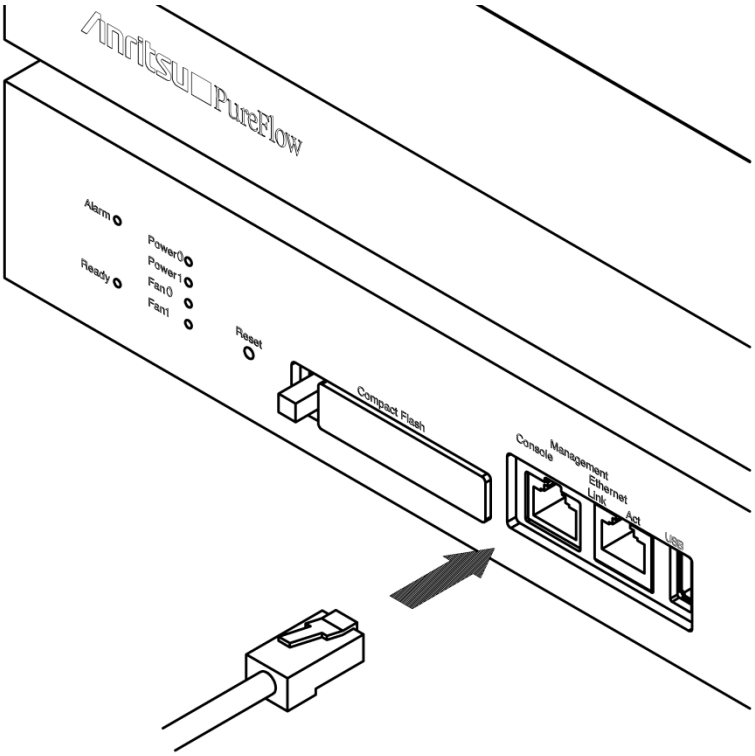

Figure 3.3.1-1 Connecting the console cable (device side)

(2) Connect the D-sub9 side of the console cable to the terminal.

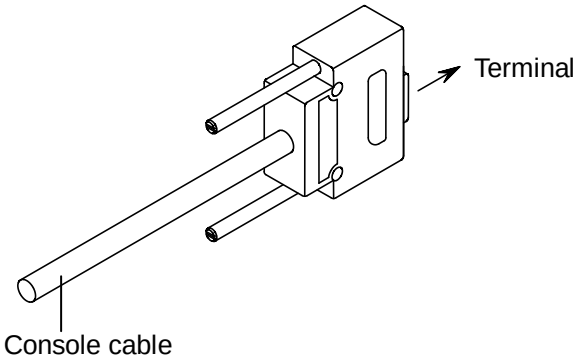

Figure 3.3.1-2 Connecting the console cable (terminal side)

(3) Use the terminal to start the terminal emulation program.

For details about starting up and setting the NF7101C and related commands, read "Command Reference (NF7101-W007E)" and "Configuration Guide (NF7101-W008E)".

3.4 Turn off the AC power

Disconnect the AC power cords from the power outlet for all power supply units to turn off the power supply of the NF7101C completely. Figure 3.4-1 shows an example of using the AC power cord (NY01004A).

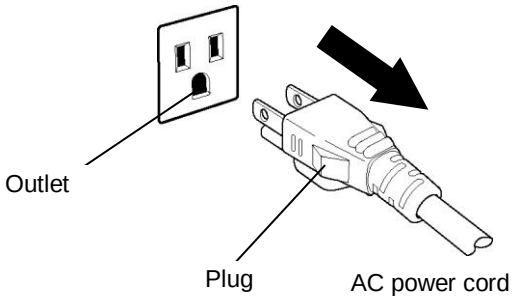

Figure 3.4-1 Turn off the AC power (outlet)

To remove an AC power cord clamped by the AC Power Cord Clamp on the inlet side, disconnect the cable while pulling down the cord clamp head tab.

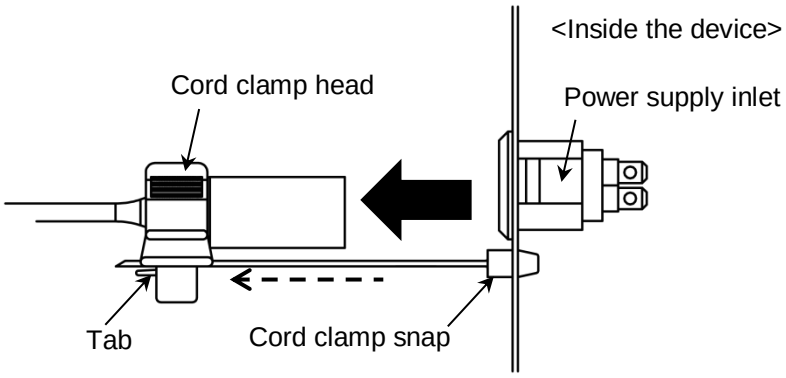

Figure 3.4-2 Unclamping the AC power cord

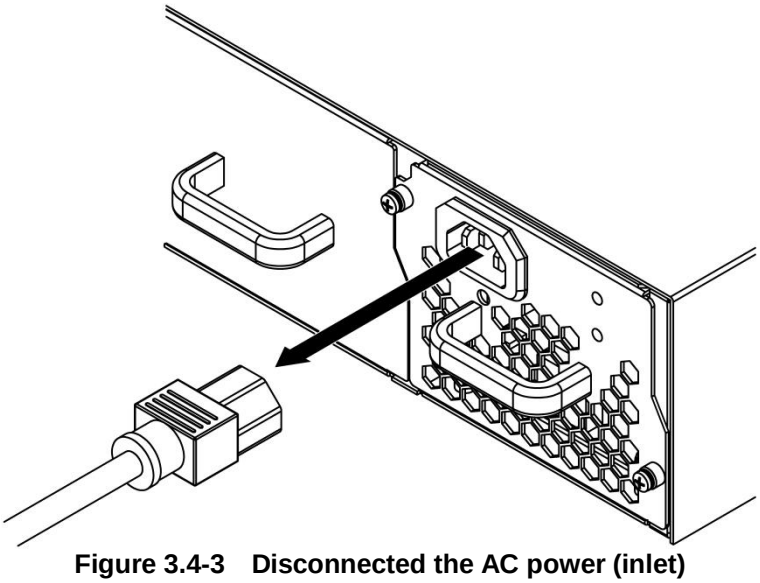

Figure 3.4-3 Disconnected the AC power (inlet)

Note:

After disconnecting the AC power cord, the AC Power Cord Clamp can be removed from the power supply unit. When removing the clamp, hold the snap part to release the latch, and pull out the cord clamp from the unit.

⚠ DANGER

Install the NF7101C in a location where the operator can easily access the power outlet. The power of the NF7101C is turned off when the AC power cord is disconnected from the power outlet.

If using the AC Power Cord Clamp, the AC power cord cannot be removed from the AC inlet immediately. Install a circuit breaker or switch that can turn off the power.

Difficulty in turning off the power may result in leading to fire, or death.

Chapter 4 Unit Replacement

This chapter describes the procedure for replacing units in the NF7101C.

4.1 Procedure for replacing a fan unit..... 4-2
4.1.1 Removing the fan unit 4-2
4.1.2 Attaching the fan unit..... 4-4
4.2 Procedure for replacing a power supply unit..... 4-5
4.2.1 Removing the power supply unit..... 4-5
4.2.2 Attaching the power supply unit..... 4-7
4.3 Procedure for adding a power supply unit..... 4-9
4.3.1 Removing the power unit blank panel..... 4-9
4.3.2 Attaching the power supply unit..... 4-10

4.1 Procedure for replacing a fan unit

Replace a fan unit according to the following procedure when it indicates an error.
Always be installed both fan unit. Except when replacing the fan unit.
Fan units can be replaced separately without turning off the power.
Prepare the new fan unit (NF7000-U002A) before starting replacement.

4.1.1 Removing the fan unit

<Procedure>

(1) Loosen the two retaining screws on the fan unit until they can be loosely rotated. Because the screws have a retaining structure, they will not fall off from the fan unit.

(2) Hold the handle, pull out the fan unit, and then remove the unit from the NF7101C. When a fan unit is removed, the fan of the other unit rotates faster.

(3) Do not touch the removed fan unit until the fan stops rotating completely.

(4) To dispose of the removed fan unit, follow the regulations in your local area.

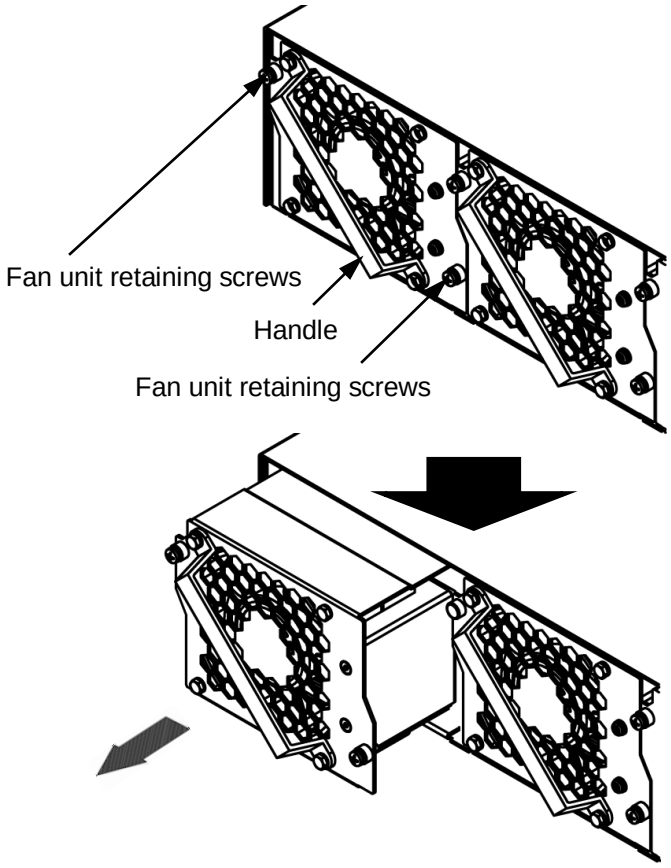

Figure 4.1.1-1 Removing the fan unit

⚠ CAUTION

- **Do not insert your finger or a stick into the fan while it is rotating. There is a risk of injury.**
- **Do not insert your hand or any object into the opening of the fan slot. There is a risk of damaging the internal circuits of the NF7101C or of device failure.**
- **Replace the fan units one by one. If the both fan units are removed without turning off the power, the NF7101C may not fully cool down, causing malfunction or failure.**
- **When removing the fan unit, install the new unit according to Section 4.1.2 "Attaching the fan unit". If the new unit is not reinstalled, the NF7101C may not fully cool down, causing malfunction or failure.**

4.1.2 Attaching the fan unit

<Procedure>

(1) Prepare the new fan unit (NF7000-U002A).

(2) Hold the fan unit so that the label faces upwards.

(3) Insert the fan unit into the NF7101C. If the device is operating normally, the fan rotates as soon as it contacts the connector. Do not insert your finger into the fan unit. There is a risk of injury.

(4) Tighten the two retaining screws on the fan unit.

(5) Check that the Fan LED corresponding to the attached fan unit lights green.

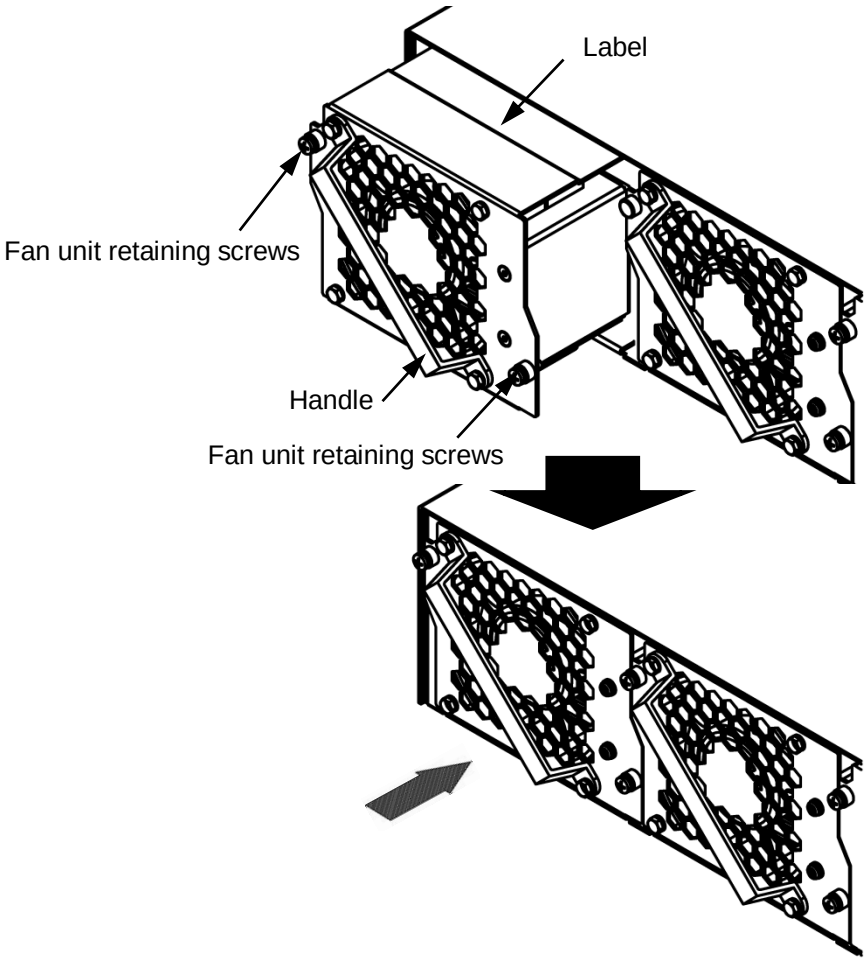

Figure 4.1.2-1 Attaching the fan unit

⚠ CAUTION

Do not insert your finger or a stick into the fan while it is rotating. There is a risk of injury.

4.2 Procedure for replacing a power supply unit

4.2.1 Removing the power supply unit

<Procedure>

(1) Disconnect the AC power cord from the power supply unit.

(2) Loosen the two retaining screws on the power supply unit until they can be loosely rotated. Because the screws have a retaining structure, they will not fall off the power supply unit.

(3) Hold the handle, slide out the power supply unit, and then remove the unit from the NF7101C.

(4) To dispose the removed power supply unit, follow the regulations of your local area.

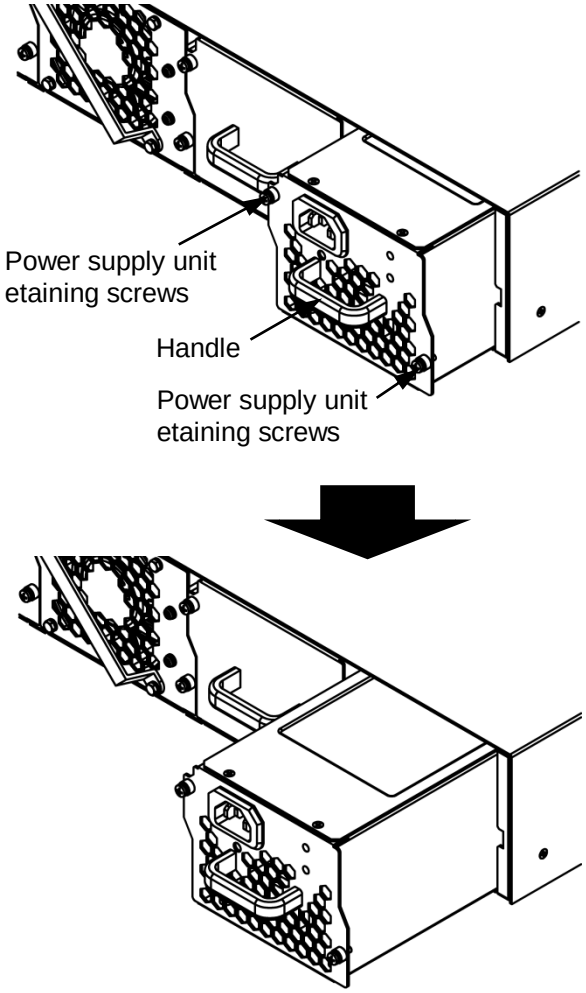

Figure 4.2.1-1 Removing the power supply unit

⚠ WARNING

Do not disassemble the power supply unit. The unit has some live parts. Therefore, there is a risk of receiving a severe or fatal electric shock.

⚠ CAUTION

The power supply unit is heavy. When pulling it out, pull out the unit half way, and then hold the unit with the other hand. If the unit is not supported, it might fall and cause injury.

When removing the power supply unit, be sure to install the new unit. If the new unit or blank panel is not installed the NF7101C may not fully cool down, causing malfunction or failure.

4.2.2 Attaching the power supply unit

<Procedure>

(1) Prepare the new power supply unit (NF7000-U001A).
Until the (5) step, the AC power cord must not be connected to the power supply unit.

(2) Hold the power supply unit so that the label faces upwards.

(3) Hold the entire power supply unit with the hand not holding the handle, and insert the unit into the power slot of the NF7101C.
When attaching the power supply unit while the switch of the NF7101C remains ON, the fan rotates as the unit contacts the connector of the NF7101C.

(4) Tighten the two retaining screws on the power supply unit.

(5) Fully insert the AC power cord.

(6) Supply AC power to the NF7101C.

(7) Check that the Power LED on the front panel lights green.

Note:

If a redundant configuration is used for the power supply units and AC power is not supplied to either of them, the LED indicates a power slot error. (The Power LED blinks green and the Alarm LED lights.) As long as AC power is supplied to the both power supply units, the LED indicates the normal state. (The Power LED lights green and the Alarm LED is OFF.)

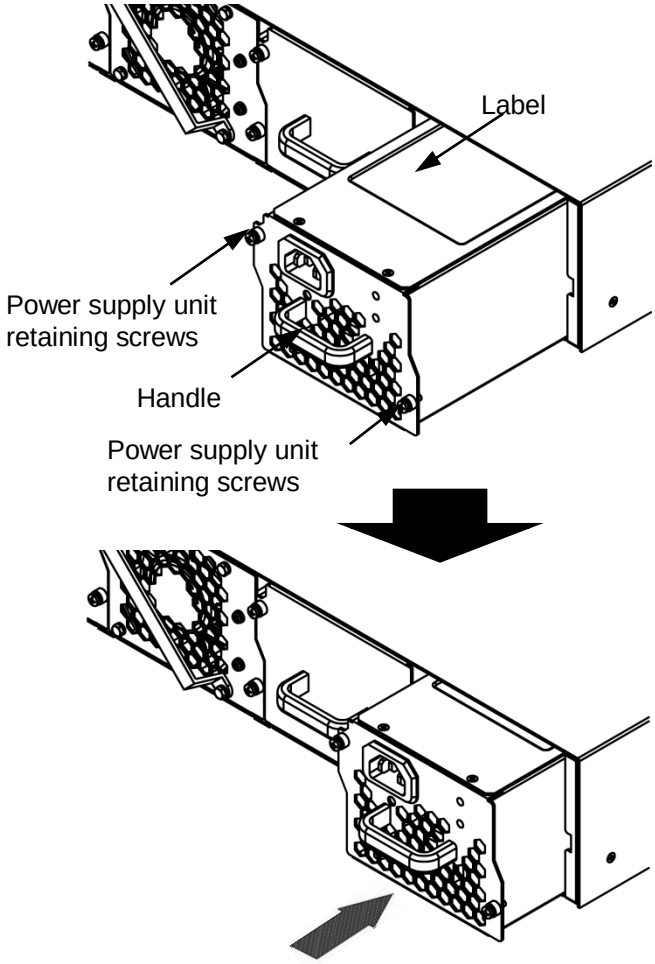

Figure 4.2.2-1 Attaching the power supply unit

⚠ CAUTION

Do not install the power supply unit in the NF7101C while the AC power cord is connected. There is a risk of device failure.

4.3 Procedure for adding a power supply unit

4.3.1 Removing the power unit blank panel

<Procedure>

(1) Loosen the two retaining screws on the power unit blank panel until they can be loosely rotated. Because the screws have a retaining structure, they will not fall off the power unit blank panel.

(2) Hold the handle, pull out the power unit blank panel, and then remove the panel from the NF7101C.

(3) Keep the removed power unit blank panel for future use.

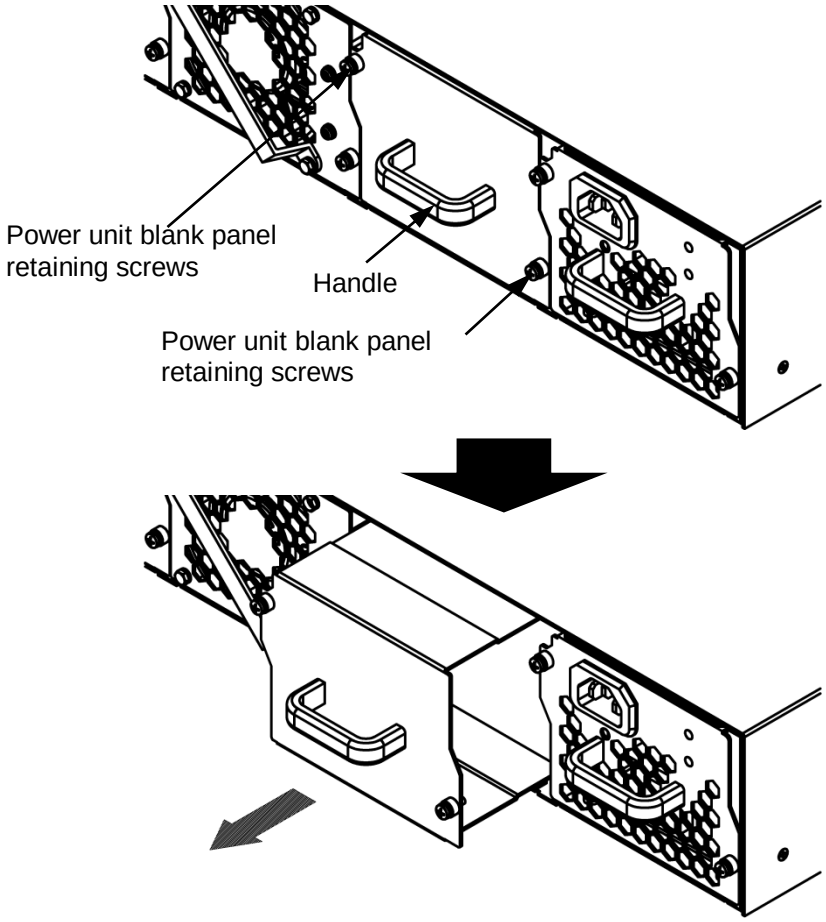

Figure 4.3.1-1 Removing the power unit blank panel

⚠ CAUTION

After removing the power unit blank panel, be sure to reattach either a power supply unit or the power unit blank panel. If this is not done, the NF7101C may not fully cool down, causing malfunction or failure.

4.3.2 Attaching the power supply unit

Attach the power supply unit to the NF7101C according to Section 4.2.2. “Attaching the power supply unit”.

Chapter 5 Troubleshooting

This chapter describes the procedure for troubleshooting the NF7101C.

5.1 LED indicator information 5-2
5.2 Troubleshooting errors 5-3
5.2.1 Power LED is blinking 5-3
5.2.2 Fan LED is blinking 5-4
5.2.3 Other errors 5-5
5.2.4 Requesting reboot of the device 5-6
5.3 Order the repair 5-7

5.1 LED indicator information

The NF7101C uses LED indicators to indicate the operating status. LEDs on the front panel show the status of NF7101C.
The following shows how to confirm the error from LED indications and troubleshoot the error.

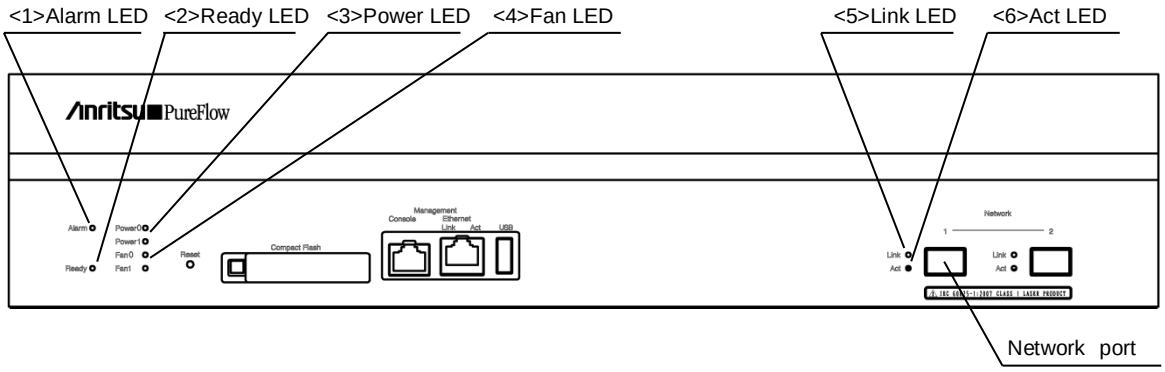

Figure 5.1-1 Names of LEDs

Table 5.1-1 LED indication (when further troubleshooting is required).

● = Lit ○ = OFF ▲ = Blinking – = Indefinite

No.	LED indication						Assumed error
	<1>Alarm (Red)	<2>Ready (Green)	<3>Power (Green) (Note)	<4>Fan (Green)	Network port		
					<5>Link	<6>Act	
1	●	○	▲	●	–	–	Power supply unit error
2	●	○	●	▲	–	–	Fan unit error or not installed
3	●	○	●	●	–	–	Other Errors
4	–	–	–	–	▲	▲	Requesting reboot of device

Note:

Power0 indicates the state of the power supply unit installed in power slot 0, and Power1 indicates the state of the power supply unit installed in power slot 1. If the power supply unit is not installed, the Power LED is not lit.

5.2 Troubleshooting errors

5.2.1 Power LED is blinking

<Troubleshooting flow when the Alarm LED is on and Power LED is blinking>

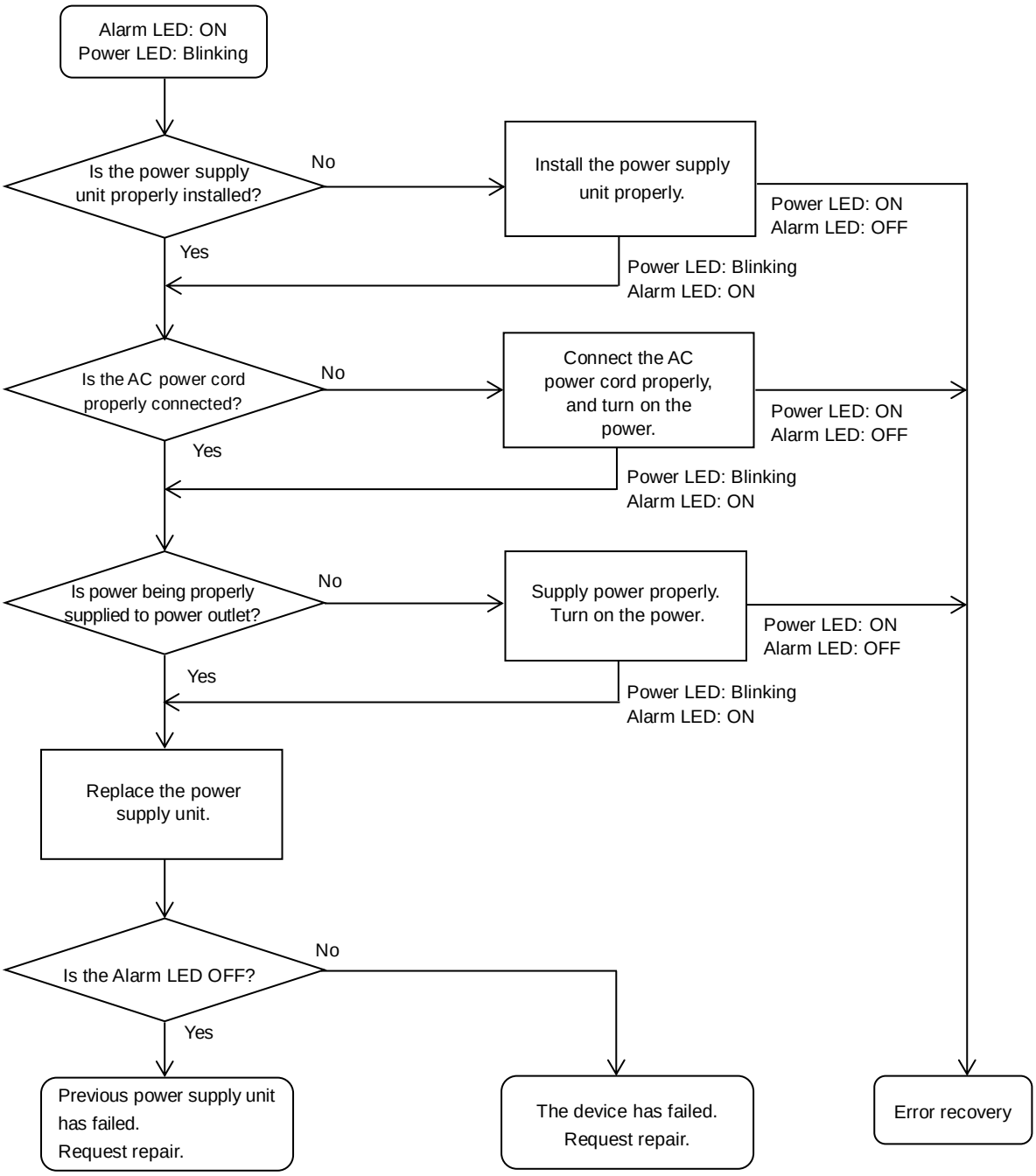

Figure 5.2.1-1 Error investigation flow when the Power LED is blinking

5.2.2 Fan LED is blinking

<Troubleshooting flow when Alarm LED is on and Fan LED is blinking>

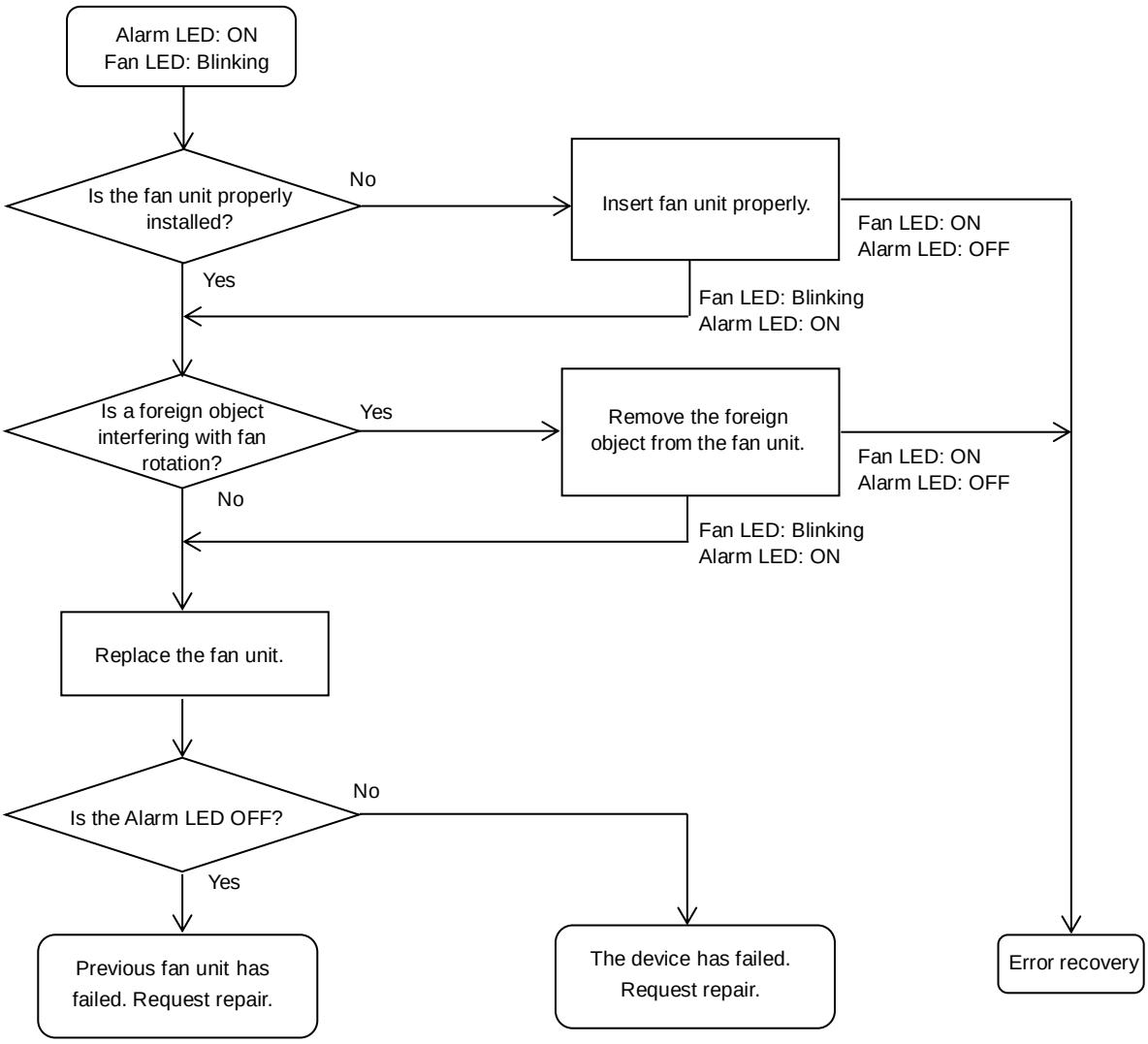

Figure 5.2.2-1 Error investigation flow when the Fan LED is blinking

5.2.3 Other errors

<Troubleshooting flow when another error occurs>

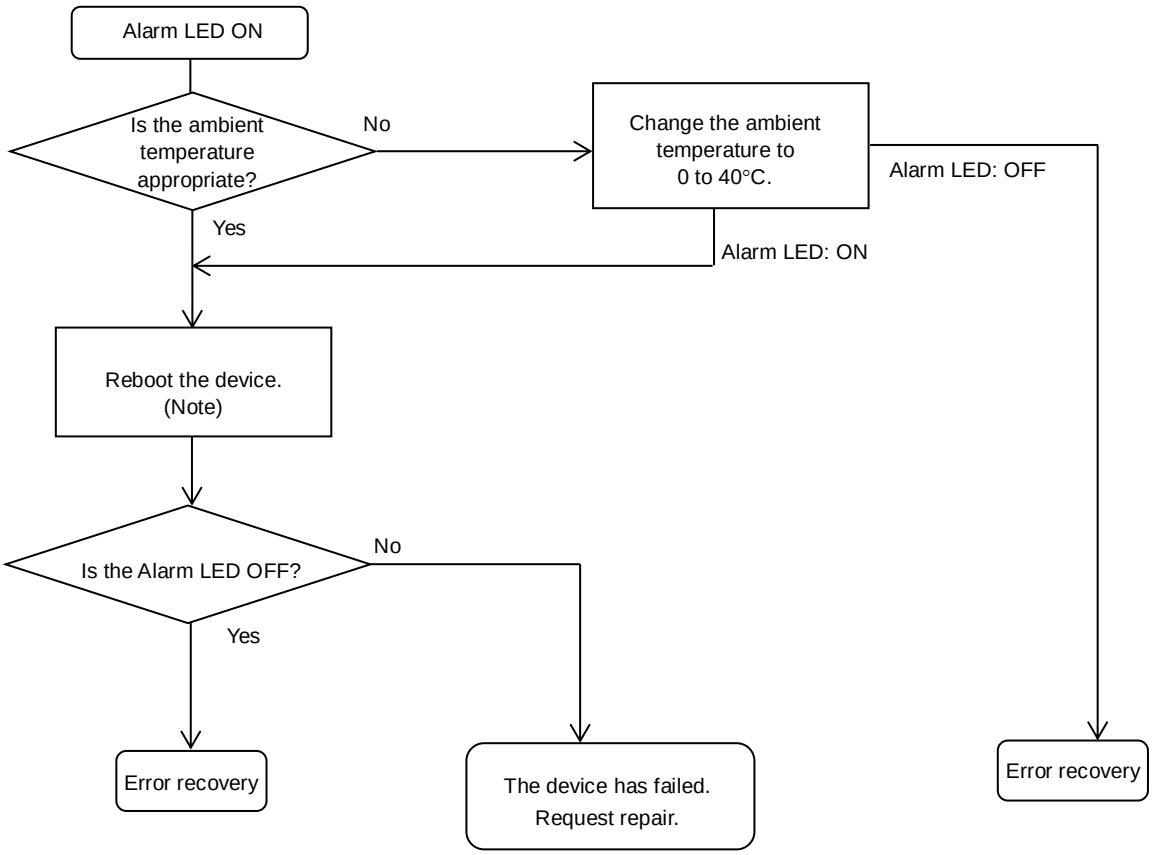

Figure 5.2.3-1 Error investigation flow when another error occurs

Note:

Error events that occur in this device can be recorded in multiple ways. The "log data" saved in the internal memory is lost when the power is turned off.

For details about how to displays the log data, read "Configuration Guide (NF7101-W008E)".

5.2.4 Requesting reboot of the device

Reboot the device when Act LED and Link LED are blinking simultaneously. The device needs to be rebooted when:

(1) No module was connected to the Network port when the NF7101C was started but an SFP module was connected while the NF7101C was operating.

(2) An SFP module was connected to the Network port when the NF7101C was started but the module was converted to an SFP+ module while the NF7101C was operating.

(3) An SFP+ module was connected to the Network port when the NF7101C was started but the module was converted to an SFP module while the NF7101C was operating.

5.3 Order the repair

Please order for repair if the device fails. Please send us, the entire device set. So, please use the packing set.
The NF7101C cannot be repaired by the customer.
Contact us if the device fails. You could find the contact information on the "Contact for this device" described on the last page of the printed version of this manual, and is available in "Contact us" on the CD-ROM.

⚠ WARNING

Do not disassemble the NF7101C. There is a risk of receiving a severe or fatal electric shock.

(Blank page)

Appendix A I/O Interface Specifications

A.1 Console port for management A-2
A.2 Ethernet port for management..... A-3
A.3 USB port..... A-4
A.4 Network port (10GBASE-SR SFP+) A-5
A.5 Network port (10GBASE-LR SFP+)..... A-6
A.6 Network port (1000BASE-SX SFP)..... A-7
A.7 Network port (1000BASE-LX SFP)..... A-8
A.8 Network port (10/100/1000BASE-T SFP) A-9

A.1 Console port for management

(1) Connector: 8pin modular connector

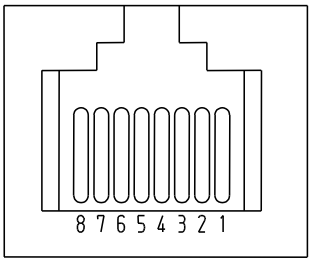

* Viewed from the mating face of the front console port

Figure A.1-1 Pin arrangement

(2) Console cable (Dsub9 side)

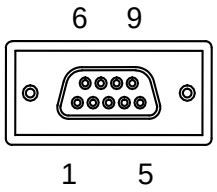

Figure A.1-2 Console cable

Table A.1-1 Pin assignment and console cable connection

RJ-45	Signal name	Connection	Dsub9 side
1	Reserved		8
2	Reserved		6
3	SD (sent data)		2
4	GND		5
5	GND		
6	RD (received data)		3
7	Reserved		4
8	Reserved		7

* On the female side of Dsub9, the 1st and 9th pins cannot be used.

A.2 Ethernet port for management

(1) Connector

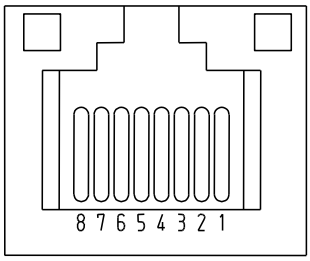

* Viewed from the mating face

Figure A.2-1 Pin arrangement

Table A.2-1 Pin assignment

Pin No.	Signal name	
	1000BASE-T	100BASE-TX 10BASE-T
1	TP1+	TX+/RX+
2	TP1–	TX–/RX–
3	TP0+	RX+/TX+
4	TP3+	—
5	TP3–	—
6	TP0–	RX–/TX–
7	TP2+	—
8	TP2–	—

(2) Network cable

Use a network cable and connector that satisfy the following specifications

- Category: CAT5E or CAT6 recommended
  (Maximum cable length: 100 m)
- Connector: 8-pin modular connector

Notes:

1. If a Cat 5 network cable is used in 1000BASE-T traffic, the maximum cable length might be too short due to the cable quality, causing communication failure.
2. Enable auto negotiation for 1000 Mbit/s communication in 1000BASE-T traffic.
3. If the speed and duplex settings are fixed, use the same settings in the communicating device.

A.3 USB port

(1) Connector

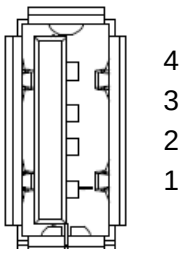

Figure A.3-1 Pin arrangement

Table A.3-1 Pin assignment

Pin No.	Signal name
1	+5V
2	D-
3	D+
4	GND

(2) Functions

Table A.3-2 Function list

	Function	Contents
1	Specification	USB 2.0
2	Connector type	Standard A
3	Maximum data transfer rate	480 Mbit/s (High-Speed)
4	Maximum output current	0.5 A

A.4 Network port (10GBASE-SR SFP+)

(1) Optical connector

- LC connector (SFP+ module)

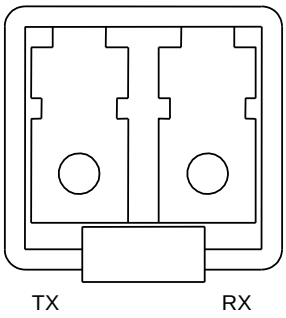

Figure A.4-1 10GBASE-SR module front view

Notes:

1. The figure above shows the connector view when installing 10GBASE-SR SFP+ module to the network port.
2. Connect the transmitter (TX) of the device to the receiver (RX) of the other side, and the receiver (RX) of the device to the transmitter (TX) of the other side.

(2) Network cable

Use a network cable and connector that satisfy the following specifications.

- Cable type:
  62.5 μm/125 μm (Core/Clad) Multimode optical fiber cable
  50 μm/125 μm (Core/Clad) Multimode optical fiber cable
- Cable standards: 850 nm wavelength
- Connector: LC connector
- Operating range: See below

Fiber type	Modal bandwidth @850 nm (MHz-km)	Range (m)	
		MIN.	MAX.
62.5 μm MMF	160	2	26
62.5 μm MMF	200	2	33
50 μm MMF	400	2	66
50 μm MMF	500	2	82
50 μm MMF	2000	2	300
50 μm MMF	4700	2	400

* For details, see Chapter 52 in Section 4 of IEEE Std 802.3-2012.

A.5 Network port (10GBASE-LR SFP+)

(1) Optical connector

- LC connector (SFP+ module)

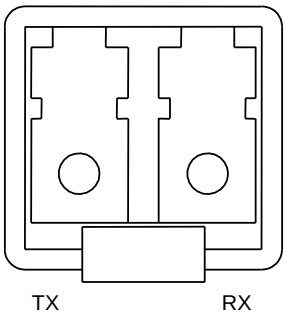

Figure A.5-1 10GBASE-LR module front view

Notes:

1. The figure above shows the connector view when installing 10GBASE-LR SFP+ module to the network port.
2. Connect the transmitter (TX) of the device to the receiver (RX) of the other side, and the receiver (RX) of the device to the transmitter (TX) of the other side.

(2) Network cable

Use a network cable and connector that satisfy the following specifications.

- Cable type:
  10 μm/125 μm (Core/Clad) Single-mode optical fiber cable
- Cable standards: 1310 nm wavelength
- Connector: LC connector
- Operating range: See below

Fiber type	Modal bandwidth @1300 nm (MHz-km)	Range (m)	
		MIN.	MAX.
10 μm SMF	N/A	2	10000

* For details, see Chapter 52 in Section 4 of IEEE Std 802.3-2012.

A.6 Network port (1000BASE-SX SFP)

(1) Optical connector

- LC connector (SFP module)

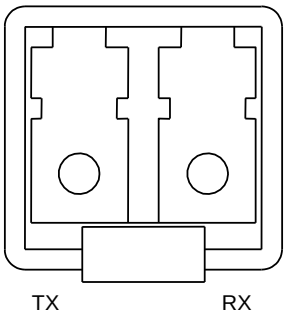

Figure A.6-1 1000BASE-SX module front view

Notes:

1. The figure above shows the connector view when installing 1000BASE-SX SFP module to the network port.
2. Connect the transmitter (TX) of the device to the receiver (RX) of the other side, and the receiver (RX) of the device to the transmitter (TX) of the other side.

(2) Network cable

Use a network cable and connector that satisfy the following specifications.

- Cable type:
  62.5 μm/125 μm (Core/Clad) Multimode optical fiber cable
  50 μm/125 μm (Core/Clad) Multimode optical fiber cable
- Cable standards: 850 nm wavelength
- Connector: LC connector
- Operating range: See below

Fiber type	Modal bandwidth @850 nm (MHz-km)	Range (m)	
		MIN.	MAX.
62.5 μm MMF	160	2	220
62.5 μm MMF	200	2	275
50 μm MMF	400	2	500
50 μm MMF	500	2	550

* For details, see Chapter 38 in Section 3 of IEEE Std 802.3-2012.

A.7 Network port (1000BASE-LX SFP)

(1) Optical connector

- LC connector (SFP module)

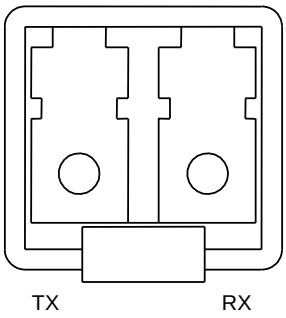

Figure A.7-1 1000BASE-LX module front view

Notes:

1. The figure above shows the connector view when installing 1000BASE-LX SFP module to the network port.
2. Connect the transmitter (TX) of the device to the receiver (RX) of the other side, and the receiver (RX) of the device to the transmitter (TX) of the other side.

(2) Network cable

Use a network cable and connector that satisfy the following specifications.

- Cable type
  62.5 μm/125 μm (Core/Clad) Multimode optical fiber cable
  50 μm/125 μm (Core/Clad) Multimode optical fiber cable
  10 μm/125 μm (Core/Clad) Single-mode optical fiber cable
- Cable standards: 1310 nm wavelength
- Connector: LC connector
- Operating range: See below

Fiber type	Modal bandwidth @1300 nm (MHz-km)	Range (m)	
		MIN.	MAX.
62.5 μm MMF	500	2	550
50 μm MMF	400	2	550
50 μm MMF	500	2	550
10 μm SMF	N/A	2	5000

* For details, see Chapter 38 in Section 3 of IEEE Std 802.3-2012.

A.8 Network port (10/100/1000BASE-T SFP)

(1) Connector

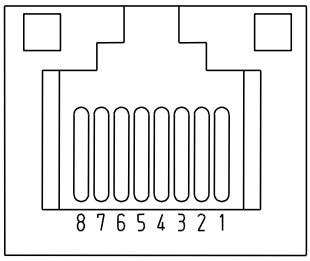

* Viewed from the mating face

Figure A.8-1 Pin arrangement

Table A.8-1 Pin assignment

Pin No.	Signal name	
	1000BASE-T	100BASE-TX 10BASE-T
1	TP1+	TX+/RX+
2	TP1–	TX–/RX–
3	TP0+	RX+/TX+
4	TP3+	—
5	TP3–	—
6	TP0–	RX–/TX–
7	TP2+	—
8	TP2–	—

(2) Network cable

Use a network cable and connector that satisfy the following specifications

- Category: CAT5E or CAT6 recommended
  (Maximum cable length: 100 m)
- Connector: 8pin modular connector

Notes:

1. If a Cat 5 network cable is used in 1000BASE-T traffic, the maximum cable length might be too short due to the cable quality, causing communication failure.
2. Enable auto negotiation for 1000 Mbit/s communication in 1000BASE-T traffic.
3. If the speed and duplex settings are fixed, use the same settings in the communicating device.

(Blank page)

Appendix B Device Specifications

B.1 Functions B-2
B.2 Dimensions and weight B-4
B.3 Power B-5
B.4 Environment B-6
B.5 Interference standards B-7
B.6 Safety standards B-8

B.1 Functions

Table B.1-1 Function list

	Function		PureFlow GSX (NF7101C)
1	Controllable bandwidth*1		1 kbit/s to 10 Gbit/s
2	Max. number of scenarios*2		40,000
3	Max. number of scenario hierarchies		8
4	Max. number of filters		40,000
5	Max. number of rule lists	Group	1,024
		Entry	512 Group × entry total: 64,000
6	Max. number of flows		1,280,000
7	Interface	Network port	SFP/SFP+ × 2 10GBASE-SR 10GBASE-LR 1000BASE-SX 1000BASE-LX 10/100/1000BASE-T
		Ethernet port	10/100/1000BASE-T × 1
		Console port	RS-232C (RJ-45)
		USB port	USB 2.0 x 1
		CF card slot	CompactFlash Specification Revision 4.1 compatible x 1 slot
8	Flow identification	Bridge-control filter	Destination MAC address (Fixed to 01-80-C2-00-00-XX)
		Ethernet filter	VLAN ID, CoS, 2-level VLAN ID, 2-level CoS, Ethernet type/length
		IPv4 filter	VLAN ID, CoS, 2-level VLAN ID, 2-level CoS, destination IP address, sender IP address ToS, protocol, destination TCP/UDP port No. sender TCP/UDP port No.
		IPv6 filter	VLAN ID, CoS, 2-level VLAN ID, 2-level CoS, destination IP address, sender IP address ToS, protocol, destination TCP/UDP port No. sender TCP/UDP port No.
9	QoS setting		8 priority levels, maximum rate (2 kbit/s to 10 Gbit/s), minimum rate (1 kbit/s to 10 Gbit/s), buffer capacity

Table B.1-1 Function list (Cont'd)

	Function		PureFlow GSX (NF7101C)
10	Max. packet length	Network port	2,048 bytes (factory default setting), 10,240 bytes Can be switched by setting
		Ethernet port	1,518 bytes
11	Network management		Telnet, SSH, RADIUS, SNTP, SYSLOG, SNMP, probe agent protocol, WebAPI

*1: If the required data transmission rate per port is 1 Gbit/s or higher, please order a band expansion license.

*2: If using 4,097 scenarios or more, please order a scenario expansion license.

B.2 Dimensions and weight

- Dimensions: 88 (H), 436 (W), 471 (D) mm (excluding protrusions)
- Weight: 8.0 kg or less (installed one power supply unit)
  9.5 kg or less (installed two power supply units)

B.3 Power

- Voltage: AC 100 V to AC 127 V, AC 200 V to AC 240 V
- Current: 1.5 A (at 100 V), 0.75 A (at 200 V)
- Current consumption: 150 VA or less, 110 W or less
- Frequency: 48 to 52 Hz, 58 to 62 Hz
- Power receiving system: Single-phase two-wire, 1 ground line
- Instantaneous interruption: 100%, 1 cycle
- Inrush current: 14 A or less (at 100 V), 28 A or less (at 200 V)
- Leakage current: 0.5 mA or less (per power supply unit)
- Quantity of heat: 110 W•sec, 396 kJ/hr, 95 kcal/hr

Table B.3-1 AC power cord rating

Model	Rated voltage	Rated current	Remarks
NY01001A	AC125 V	10 A	For the U.S.
NY01004A	AC125 V	7 A	For Japan

B.4 Environment

- Operable temperature: 0 to 40°C
- Operable humidity: 20 to 80% (no condensation)
- Storage temperature: -20 to 60°C
- Operable height: 2,000 m or lower
- MTBF: 167,000 H (only device main unit)*
  200,000 H (only 150W AC Input Power Supply Unit)
  2,820,000 H (only FAN Unit)
- Life limited parts:

150W AC Input Power Supply Unit	4.5 years
FAN Unit	4.5 years

*: Except for 150W AC Input Power Supply Unit and FAN Unit.

B.5 Interference standards

- VCCI: Class A
- FCC: Class A
- Harmonic current: JIS C 61000-3-2

B.6 Safety standards

- UL: 60950-1
- CSA: C22.2 No.60950-1-07

Appendix C Third Party Software License

C.1 Third Party Software C-2
C.2 GPLv2 ..... C-3
C.3 GPLv3 ..... C-7
C.4 LGPLv2.1 ..... C-16
C.5 iputils C-23
C.6 ntpd C-24
C.7 libuuid C-25
C.8 sudo C-26
C.9 openssh C-28
C.10 openssl C-33
C.11 zlib C-35
C.12 radiusclient-ng C-36
C.13 apache C-38
C.14 json-c C-41

C.1 Third Party Software

The following table lists the third-party libraries, applications, and other software used by the NF7101C.

Table C.1-1 List of Libraries, Applications, and Licenses

Item name	Contents	License
linux	Linux kernel	GPLv2
libgcc	Gcc library	GPLv2
libpthread	POSIX thread library	LGPL
glibc	GNU C standard library	LGPL
busybox	Command line application	GPLv2
net-tools	NET-3 network tool This tool is used to control the network subsystems (arp, ifconfig, route, etc.)	GPLv2
iputils	Tool used to test the network host reachability (ping)	Original
module-init-tools	Driver module installation tool	GPLv2
ntpd	NTP client	Original
rsyslog	Syslog daemon	GPLv3
libee	String operation library	GPLv2
libestr	String operation library	GPLv2
libuuid	Identifier generation library	Original
sudo	Program that assigns restricted super-user privileges to designated users	ISC-style
udev	Device manager that provides a persistent device naming system	GPLv2
iptables	Packet filtering application	GPLv2
openssh	SSH server	Original
openssl	Cryptographic library	Original
zlib	Data compression library	Original
radiusclient-ng	RADIUS client	Original
apache	HTTP server	Original
json-c	JSON data analysis package	Original
u-boot	Boot loader	GPLv2

The terms of these licenses are described on the following pages.

C.2 GPLv2

GNU GENERAL PUBLIC LICENSE
Version 2, June 1991

Copyright (C) 1989, 1991 Free Software Foundation, Inc.
675 Mass Ave, Cambridge, MA 02139, USA
Everyone is permitted to copy and distribute verbatim copies
of this license document, but changing it is not allowed.

Preamble

The licenses for most software are designed to take away your freedom to share and change it. By contrast, the GNU General Public License is intended to guarantee your freedom to share and change free software--to make sure the software is free for all its users. This General Public License applies to most of the Free Software Foundation's software and to any other program whose authors commit to using it. (Some other Free Software Foundation software is covered by the GNU Library General Public License instead.) You can apply it to your programs, too.

When we speak of free software, we are referring to freedom, not price. Our General Public Licenses are designed to make sure that you have the freedom to distribute copies of free software (and charge for this service if you wish), that you receive source code or can get it if you want it, that you can change the software or use pieces of it in new free programs; and that you know you can do these things.

To protect your rights, we need to make restrictions that forbid anyone to deny you these rights or to ask you to surrender the rights. These restrictions translate to certain responsibilities for you if you distribute copies of the software, or if you modify it.

For example, if you distribute copies of such a program, whether gratis or for a fee, you must give the recipients all the rights that you have. You must make sure that they, too, receive or can get the source code. And you must show them these terms so they know their rights.

We protect your rights with two steps: (1) copyright the software, and (2) offer you this license which gives you legal permission to copy, distribute and/or modify the software.

Also, for each author's protection and ours, we want to make certain that everyone understands that there is no warranty for this free software. If the software is modified by someone else and passed on, we want its recipients to know that what they have is not the original, so that any problems introduced by others will not reflect on the original authors' reputations.

Finally, any free program is threatened constantly by software patents. We wish to avoid the danger that redistributors of a free program will individually obtain patent licenses, in effect making the program proprietary. To prevent this, we have made it clear that any patent must be licensed for everyone's free use or not licensed at all.

The precise terms and conditions for copying, distribution and modification follow.

GNU GENERAL PUBLIC LICENSE
TERMS AND CONDITIONS FOR COPYING, DISTRIBUTION AND MODIFICATION

0. This License applies to any program or other work which contains a notice placed by the copyright holder saying it may be distributed under the terms of this General Public License. The "Program", below, refers to any such program or work, and a "work based on the Program" means either the Program or any derivative work under copyright law: that is to say, a work containing the Program or a portion of it, either verbatim or with modifications and/or translated into another language. (Hereinafter, translation is included without limitation in the term "modification".) Each licensee is addressed as "you".

Activities other than copying, distribution and modification are not covered by this License; they are outside its scope. The act of running the Program is not restricted, and the output from the Program is covered only if its contents constitute a work based on the Program (independent of having been made by running the Program). Whether that is true depends on what the Program does.

1. You may copy and distribute verbatim copies of the Program's source code as you receive it, in any medium, provided that you conspicuously and appropriately publish on each copy an appropriate copyright notice and disclaimer of warranty; keep intact all the notices that refer to this License and to the absence of any warranty; and give any other recipients of the Program a copy of this License along with the Program.

You may charge a fee for the physical act of transferring a copy, and you may at your option offer warranty protection in exchange for a fee.

2. You may modify your copy or copies of the Program or any portion of it, thus forming a work based on the Program, and copy and distribute such modifications or work under the terms of Section 1 above, provided that you also meet all of these conditions:

a) You must cause the modified files to carry prominent notices stating that you changed the files and the date of any change.

b) You must cause any work that you distribute or publish, that in whole or in part contains or is derived from the Program or any part thereof, to be licensed as a whole at no charge to all third parties under the terms of this License.

c) If the modified program normally reads commands interactively when run, you must cause it, when started running for such interactive use in the most ordinary way, to print or display an announcement including an appropriate copyright notice and a notice that there is no warranty (or else, saying that you provide a warranty) and that users may redistribute the program under these conditions, and telling the user how to view a copy of this License. (Exception: if the Program itself is interactive but does not normally print such an announcement, your work based on the Program is not required to print an announcement.)

These requirements apply to the modified work as a whole. If identifiable sections of that work are not derived from the Program, and can be reasonably considered independent and separate works in themselves, then this License, and its terms, do not apply to those sections when you distribute them as separate works. But when you distribute the same sections as part of a whole which is a work based on the Program, the distribution of the whole must be on the terms of this License, whose permissions for other licensees extend to the entire whole, and thus to each and every part regardless of who wrote it.

Thus, it is not the intent of this section to claim rights or contest your rights to work written entirely by you; rather, the intent is to exercise the right to control the distribution of derivative or collective works based on the Program.

In addition, mere aggregation of another work not based on the Program with the Program (or with a work based on the Program) on a volume of a storage or distribution medium does not bring the other work under the scope of this License.

3. You may copy and distribute the Program (or a work based on it, under Section 2) in object code or executable form under the terms of Sections 1 and 2 above provided that you also do one of the following:

a) Accompany it with the complete corresponding machine-readable source code, which must be distributed under the terms of Sections 1 and 2 above on a medium customarily used for software interchange; or,

b) Accompany it with a written offer, valid for at least three years, to give any third party, for a charge no more than your

cost of physically performing source distribution, a complete machine-readable copy of the corresponding source code, to be distributed under the terms of Sections 1 and 2 above on a medium customarily used for software interchange; or,

c) Accompany it with the information you received as to the offer to distribute corresponding source code. (This alternative is allowed only for noncommercial distribution and only if you received the program in object code or executable form with such an offer, in accord with Subsection b above.)

The source code for a work means the preferred form of the work for making modifications to it. For an executable work, complete source code means all the source code for all modules it contains, plus any associated interface definition files, plus the scripts used to control compilation and installation of the executable. However, as a special exception, the source code distributed need not include anything that is normally distributed (in either source or binary form) with the major components (compiler, kernel, and so on) of the operating system on which the executable runs, unless that component itself accompanies the executable.

If distribution of executable or object code is made by offering access to copy from a designated place, then offering equivalent access to copy the source code from the same place counts as distribution of the source code, even though third parties are not compelled to copy the source along with the object code.

4. You may not copy, modify, sublicense, or distribute the Program except as expressly provided under this License. Any attempt otherwise to copy, modify, sublicense or distribute the Program is void, and will automatically terminate your rights under this License. However, parties who have received copies, or rights, from you under this License will not have their licenses terminated so long as such parties remain in full compliance.

5. You are not required to accept this License, since you have not signed it. However, nothing else grants you permission to modify or distribute the Program or its derivative works. These actions are prohibited by law if you do not accept this License. Therefore, by modifying or distributing the Program (or any work based on the Program), you indicate your acceptance of this License to do so, and all its terms and conditions for copying, distributing or modifying the Program or works based on it.

6. Each time you redistribute the Program (or any work based on the Program), the recipient automatically receives a license from the original licensor to copy, distribute or modify the Program subject to these terms and conditions. You may not impose any further restrictions on the recipients' exercise of the rights granted herein. You are not responsible for enforcing compliance by third parties to this License.

7. If, as a consequence of a court judgment or allegation of patent infringement or for any other reason (not limited to patent issues), conditions are imposed on you (whether by court order, agreement or otherwise) that contradict the conditions of this License, they do not excuse you from the conditions of this License. If you cannot distribute so as to satisfy simultaneously your obligations under this License and any other pertinent obligations, then as a consequence you may not distribute the Program at all. For example, if a patent license would not permit royalty-free redistribution of the Program by all those who receive copies directly or indirectly through you, then the only way you could satisfy both it and this License would be to refrain entirely from distribution of the Program.

If any portion of this section is held invalid or unenforceable under any particular circumstance, the balance of the section is intended to apply and the section as a whole is intended to apply in other circumstances.

It is not the purpose of this section to induce you to infringe any patents or other property right claims or to contest validity of any

such claims; this section has the sole purpose of protecting the integrity of the free software distribution system, which is implemented by public license practices. Many people have made generous contributions to the wide range of software distributed through that system in reliance on consistent application of that system; it is up to the author/donor to decide if he or she is willing to distribute software through any other system and a licensee cannot impose that choice.

This section is intended to make thoroughly clear what is believed to be a consequence of the rest of this License.

8. If the distribution and/or use of the Program is restricted in certain countries either by patents or by copyrighted interfaces, the original copyright holder who places the Program under this License may add an explicit geographical distribution limitation excluding those countries, so that distribution is permitted only in or among countries not thus excluded. In such case, this License incorporates the limitation as if written in the body of this License.

9. The Free Software Foundation may publish revised and/or new versions of the General Public License from time to time. Such new versions will be similar in spirit to the present version, but may differ in detail to address new problems or concerns.

Each version is given a distinguishing version number. If the Program specifies a version number of this License which applies to it and "any later version", you have the option of following the terms and conditions either of that version or of any later version published by the Free Software Foundation. If the Program does not specify a version number of this License, you may choose any version ever published by the Free Software Foundation.

10. If you wish to incorporate parts of the Program into other free programs whose distribution conditions are different, write to the author to ask for permission. For software which is copyrighted by the Free Software Foundation, write to the Free Software Foundation; we sometimes make exceptions for this. Our decision will be guided by the two goals of preserving the free status of all derivatives of our free software and of promoting the sharing and reuse of software generally.

NO WARRANTY

11. BECAUSE THE PROGRAM IS LICENSED FREE OF CHARGE, THERE IS NO WARRANTY FOR THE PROGRAM, TO THE EXTENT PERMITTED BY APPLICABLE LAW. EXCEPT WHEN OTHERWISE STATED IN WRITING THE COPYRIGHT HOLDERS AND/OR OTHER PARTIES PROVIDE THE PROGRAM "AS IS" WITHOUT WARRANTY OF ANY KIND, EITHER EXPRESSED OR IMPLIED, INCLUDING, BUT NOT LIMITED TO, THE IMPLIED WARRANTIES OF MERCHANTABILITY AND FITNESS FOR A PARTICULAR PURPOSE. THE ENTIRE RISK AS TO THE QUALITY AND PERFORMANCE OF THE PROGRAM IS WITH YOU. SHOULD THE PROGRAM PROVE DEFECTIVE, YOU ASSUME THE COST OF ALL NECESSARY SERVICING, REPAIR OR CORRECTION.

12. IN NO EVENT UNLESS REQUIRED BY APPLICABLE LAW OR AGREED TO IN WRITING WILL ANY COPYRIGHT HOLDER, OR ANY OTHER PARTY WHO MAY MODIFY AND/OR REDISTRIBUTE THE PROGRAM AS PERMITTED ABOVE, BE LIABLE TO YOU FOR DAMAGES, INCLUDING ANY GENERAL, SPECIAL, INCIDENTAL OR CONSEQUENTIAL DAMAGES ARISING OUT OF THE USE OR INABILITY TO USE THE PROGRAM (INCLUDING BUT NOT LIMITED TO LOSS OF DATA OR DATA BEING RENDERED INACCURATE OR LOSSES SUSTAINED BY YOU OR THIRD PARTIES OR A FAILURE OF THE PROGRAM TO OPERATE WITH ANY OTHER PROGRAMS), EVEN IF SUCH HOLDER OR OTHER PARTY HAS BEEN ADVISED OF THE POSSIBILITY OF SUCH DAMAGES.

END OF TERMS AND CONDITIONS

C.3 GPLv3

GNU GENERAL PUBLIC LICENSE
Version 3, 29 June 2007

Copyright (C) 2007 Free Software Foundation, Inc. <http://fsf.org/>
Everyone is permitted to copy and distribute verbatim copies
of this license document, but changing it is not allowed.

Preamble

The GNU General Public License is a free, copyleft license for software and other kinds of works.

The licenses for most software and other practical works are designed to take away your freedom to share and change the works. By contrast, the GNU General Public License is intended to guarantee your freedom to share and change all versions of a program--to make sure it remains free software for all its users. We, the Free Software Foundation, use the GNU General Public License for most of our software; it applies also to any other work released this way by its authors. You can apply it to your programs, too.

When we speak of free software, we are referring to freedom, not price. Our General Public Licenses are designed to make sure that you have the freedom to distribute copies of free software (and charge for them if you wish), that you receive source code or can get it if you want it, that you can change the software or use pieces of it in new free programs, and that you know you can do these things.

To protect your rights, we need to prevent others from denying you these rights or asking you to surrender the rights. Therefore, you have certain responsibilities if you distribute copies of the software, or if you modify it: responsibilities to respect the freedom of others.

For example, if you distribute copies of such a program, whether gratis or for a fee, you must pass on to the recipients the same freedoms that you received. You must make sure that they, too, receive or can get the source code. And you must show them these terms so they know their rights.

Developers that use the GNU GPL protect your rights with two steps: (1) assert copyright on the software, and (2) offer you this License giving you legal permission to copy, distribute and/or modify it.

For the developers' and authors' protection, the GPL clearly explains that there is no warranty for this free software. For both users' and authors' sake, the GPL requires that modified versions be marked as changed, so that their problems will not be attributed erroneously to authors of previous versions.

Some devices are designed to deny users access to install or run modified versions of the software inside them, although the manufacturer can do so. This is fundamentally incompatible with the aim of protecting users' freedom to change the software. The systematic pattern of such abuse occurs in the area of products for individuals to use, which is precisely where it is most unacceptable. Therefore, we have designed this version of the GPL to prohibit the practice for those products. If such problems arise substantially in other domains, we stand ready to extend this provision to those domains in future versions of the GPL, as needed to protect the freedom of users.

Finally, every program is threatened constantly by software patents. States should not allow patents to restrict development and use of software on general-purpose computers, but in those that do, we wish to avoid the special danger that patents applied to a free program could make it effectively proprietary. To prevent this, the GPL assures that patents cannot be used to render the program non-free.

The precise terms and conditions for copying, distribution and modification follow.

TERMS AND CONDITIONS

0. Definitions.

"This License" refers to version 3 of the GNU General Public License.

"Copyright" also means copyright-like laws that apply to other kinds of works, such as semiconductor masks.

"The Program" refers to any copyrightable work licensed under this License. Each licensee is addressed as "you". "Licensees" and "recipients" may be individuals or organizations.

To "modify" a work means to copy from or adapt all or part of the work in a fashion requiring copyright permission, other than the making of an exact copy. The resulting work is called a "modified version" of the earlier work or a work "based on" the earlier work.

A "covered work" means either the unmodified Program or a work based on the Program.

To "propagate" a work means to do anything with it that, without permission, would make you directly or secondarily liable for infringement under applicable copyright law, except executing it on a computer or modifying a private copy. Propagation includes copying, distribution (with or without modification), making available to the public, and in some countries other activities as well.

To "convey" a work means any kind of propagation that enables other parties to make or receive copies. Mere interaction with a user through a computer network, with no transfer of a copy, is not conveying.

An interactive user interface displays "Appropriate Legal Notices" to the extent that it includes a convenient and prominently visible feature that (1) displays an appropriate copyright notice, and (2) tells the user that there is no warranty for the work (except to the extent that warranties are provided), that licensees may convey the work under this License, and how to view a copy of this License. If the interface presents a list of user commands or options, such as a menu, a prominent item in the list meets this criterion.

1. Source Code.

The "source code" for a work means the preferred form of the work for making modifications to it. "Object code" means any non-source form of a work.

A "Standard Interface" means an interface that either is an official standard defined by a recognized standards body, or, in the case of interfaces specified for a particular programming language, one that is widely used among developers working in that language.

The "System Libraries" of an executable work include anything, other than the work as a whole, that (a) is included in the normal form of packaging a Major Component, but which is not part of that Major Component, and (b) serves only to enable use of the work with that Major Component, or to implement a Standard Interface for which an implementation is available to the public in source code form. A "Major Component", in this context, means a major essential component (kernel, window system, and so on) of the specific operating system (if any) on which the executable work runs, or a compiler used to produce the work, or an object code interpreter used to run it.

The "Corresponding Source" for a work in object code form means all the source code needed to generate, install, and (for an executable work) run the object code and to modify the work, including scripts to control those activities. However, it does not include the work's System Libraries, or general-purpose tools or generally available free programs which are used unmodified in performing those activities but which are not part of the work. For example, Corresponding Source includes interface definition files associated with source files for the work, and the source code for shared libraries and dynamically linked subprograms that the work is specifically designed to require,

such as by intimate data communication or control flow between those subprograms and other parts of the work.

The Corresponding Source need not include anything that users can regenerate automatically from other parts of the Corresponding Source.

The Corresponding Source for a work in source code form is that same work.

2. Basic Permissions.

All rights granted under this License are granted for the term of copyright on the Program, and are irrevocable provided the stated conditions are met. This License explicitly affirms your unlimited permission to run the unmodified Program. The output from running a covered work is covered by this License only if the output, given its content, constitutes a covered work. This License acknowledges your rights of fair use or other equivalent, as provided by copyright law.

You may make, run and propagate covered works that you do not convey, without conditions so long as your license otherwise remains in force. You may convey covered works to others for the sole purpose of having them make modifications exclusively for you, or provide you with facilities for running those works, provided that you comply with the terms of this License in conveying all material for which you do not control copyright. Those thus making or running the covered works for you must do so exclusively on your behalf, under your direction and control, on terms that prohibit them from making any copies of your copyrighted material outside their relationship with you.

Conveying under any other circumstances is permitted solely under the conditions stated below. Sublicensing is not allowed; section 10 makes it unnecessary.

3. Protecting Users' Legal Rights From Anti-Circumvention Law.

No covered work shall be deemed part of an effective technological measure under any applicable law fulfilling obligations under article 11 of the WIPO copyright treaty adopted on 20 December 1996, or similar laws prohibiting or restricting circumvention of such measures.

When you convey a covered work, you waive any legal power to forbid circumvention of technological measures to the extent such circumvention is effected by exercising rights under this License with respect to the covered work, and you disclaim any intention to limit operation or modification of the work as a means of enforcing, against the work's users, your or third parties' legal rights to forbid circumvention of technological measures.

4. Conveying Verbatim Copies.

You may convey verbatim copies of the Program's source code as you receive it, in any medium, provided that you conspicuously and appropriately publish on each copy an appropriate copyright notice; keep intact all notices stating that this License and any non-permissive terms added in accord with section 7 apply to the code; keep intact all notices of the absence of any warranty; and give all recipients a copy of this License along with the Program.

You may charge any price or no price for each copy that you convey, and you may offer support or warranty protection for a fee.

5. Conveying Modified Source Versions.

You may convey a work based on the Program, or the modifications to produce it from the Program, in the form of source code under the terms of section 4, provided that you also meet all of these conditions:

a) The work must carry prominent notices stating that you modified it, and giving a relevant date.

b) The work must carry prominent notices stating that it is released under this License and any conditions added under section 7. This requirement modifies the requirement in section 4 to "keep intact all notices".

c) You must license the entire work, as a whole, under this License to anyone who comes into possession of a copy. This License will therefore apply, along with any applicable section 7 additional terms, to the whole of the work, and all its parts, regardless of how they are packaged. This License gives no permission to license the work in any other way, but it does not invalidate such permission if you have separately received it.

d) If the work has interactive user interfaces, each must display Appropriate Legal Notices; however, if the Program has interactive interfaces that do not display Appropriate Legal Notices, your work need not make them do so.

A compilation of a covered work with other separate and independent works, which are not by their nature extensions of the covered work, and which are not combined with it such as to form a larger program, in or on a volume of a storage or distribution medium, is called an "aggregate" if the compilation and its resulting copyright are not used to limit the access or legal rights of the compilation's users beyond what the individual works permit. Inclusion of a covered work in an aggregate does not cause this License to apply to the other parts of the aggregate.

6. Conveying Non-Source Forms.

You may convey a covered work in object code form under the terms of sections 4 and 5, provided that you also convey the machine-readable Corresponding Source under the terms of this License, in one of these ways:

a) Convey the object code in, or embodied in, a physical product (including a physical distribution medium), accompanied by the Corresponding Source fixed on a durable physical medium customarily used for software interchange.

b) Convey the object code in, or embodied in, a physical product (including a physical distribution medium), accompanied by a written offer, valid for at least three years and valid for as long as you offer spare parts or customer support for that product model, to give anyone who possesses the object code either (1) a copy of the Corresponding Source for all the software in the product that is covered by this License, on a durable physical medium customarily used for software interchange, for a price no more than your reasonable cost of physically performing this conveying of source, or (2) access to copy the Corresponding Source from a network server at no charge.

c) Convey individual copies of the object code with a copy of the written offer to provide the Corresponding Source. This alternative is allowed only occasionally and noncommercially, and only if you received the object code with such an offer, in accord with subsection 6b.

d) Convey the object code by offering access from a designated place (gratis or for a charge), and offer equivalent access to the Corresponding Source in the same way through the same place at no further charge. You need not require recipients to copy the Corresponding Source along with the object code. If the place to copy the object code is a network server, the Corresponding Source may be on a different server (operated by you or a third party) that supports equivalent copying facilities, provided you maintain clear directions next to the object code saying where to find the Corresponding Source. Regardless of what server hosts the Corresponding Source, you remain obligated to ensure that it is available for as long as needed to satisfy these requirements.

e) Convey the object code using peer-to-peer transmission, provided you inform other peers where the object code and Corresponding

Source of the work are being offered to the general public at no charge under subsection 6d.

A separable portion of the object code, whose source code is excluded from the Corresponding Source as a System Library, need not be included in conveying the object code work.

A "User Product" is either (1) a "consumer product", which means any tangible personal property which is normally used for personal, family, or household purposes, or (2) anything designed or sold for incorporation into a dwelling. In determining whether a product is a consumer product, doubtful cases shall be resolved in favor of coverage. For a particular product received by a particular user, "normally used" refers to a typical or common use of that class of product, regardless of the status of the particular user or of the way in which the particular user actually uses, or expects or is expected to use, the product. A product is a consumer product regardless of whether the product has substantial commercial, industrial or non-consumer uses, unless such uses represent the only significant mode of use of the product.

"Installation Information" for a User Product means any methods, procedures, authorization keys, or other information required to install and execute modified versions of a covered work in that User Product from a modified version of its Corresponding Source. The information must suffice to ensure that the continued functioning of the modified object code is in no case prevented or interfered with solely because modification has been made.

If you convey an object code work under this section in, or with, or specifically for use in, a User Product, and the conveying occurs as part of a transaction in which the right of possession and use of the User Product is transferred to the recipient in perpetuity or for a fixed term (regardless of how the transaction is characterized), the Corresponding Source conveyed under this section must be accompanied by the Installation Information. But this requirement does not apply if neither you nor any third party retains the ability to install modified object code on the User Product (for example, the work has been installed in ROM).

The requirement to provide Installation Information does not include a requirement to continue to provide support service, warranty, or updates for a work that has been modified or installed by the recipient, or for the User Product in which it has been modified or installed. Access to a network may be denied when the modification itself materially and adversely affects the operation of the network or violates the rules and protocols for communication across the network.

Corresponding Source conveyed, and Installation Information provided, in accord with this section must be in a format that is publicly documented (and with an implementation available to the public in source code form), and must require no special password or key for unpacking, reading or copying.

7. Additional Terms.

"Additional permissions" are terms that supplement the terms of this License by making exceptions from one or more of its conditions. Additional permissions that are applicable to the entire Program shall be treated as though they were included in this License, to the extent that they are valid under applicable law. If additional permissions apply only to part of the Program, that part may be used separately under those permissions, but the entire Program remains governed by this License without regard to the additional permissions.

When you convey a copy of a covered work, you may at your option remove any additional permissions from that copy, or from any part of it. (Additional permissions may be written to require their own removal in certain cases when you modify the work.) You may place additional permissions on material, added by you to a covered work, for which you have or can give appropriate copyright permission.

Notwithstanding any other provision of this License, for material you add to a covered work, you may (if authorized by the copyright holders of

that material) supplement the terms of this License with terms:

a) Disclaiming warranty or limiting liability differently from the terms of sections 15 and 16 of this License; or

b) Requiring preservation of specified reasonable legal notices or author attributions in that material or in the Appropriate Legal Notices displayed by works containing it; or

c) Prohibiting misrepresentation of the origin of that material, or requiring that modified versions of such material be marked in reasonable ways as different from the original version; or

d) Limiting the use for publicity purposes of names of licensors or authors of the material; or

e) Declining to grant rights under trademark law for use of some trade names, trademarks, or service marks; or

f) Requiring indemnification of licensors and authors of that material by anyone who conveys the material (or modified versions of it) with contractual assumptions of liability to the recipient, for any liability that these contractual assumptions directly impose on those licensors and authors.

All other non-permissive additional terms are considered "further restrictions" within the meaning of section 10. If the Program as you received it, or any part of it, contains a notice stating that it is governed by this License along with a term that is a further restriction, you may remove that term. If a license document contains a further restriction but permits relicensing or conveying under this License, you may add to a covered work material governed by the terms of that license document, provided that the further restriction does not survive such relicensing or conveying.

If you add terms to a covered work in accord with this section, you must place, in the relevant source files, a statement of the additional terms that apply to those files, or a notice indicating where to find the applicable terms.

Additional terms, permissive or non-permissive, may be stated in the form of a separately written license, or stated as exceptions; the above requirements apply either way.

8. Termination.

You may not propagate or modify a covered work except as expressly provided under this License. Any attempt otherwise to propagate or modify it is void, and will automatically terminate your rights under this License (including any patent licenses granted under the third paragraph of section 11).

However, if you cease all violation of this License, then your license from a particular copyright holder is reinstated (a) provisionally, unless and until the copyright holder explicitly and finally terminates your license, and (b) permanently, if the copyright holder fails to notify you of the violation by some reasonable means prior to 60 days after the cessation.

Moreover, your license from a particular copyright holder is reinstated permanently if the copyright holder notifies you of the violation by some reasonable means, this is the first time you have received notice of violation of this License (for any work) from that copyright holder, and you cure the violation prior to 30 days after your receipt of the notice.

Termination of your rights under this section does not terminate the licenses of parties who have received copies or rights from you under this License. If your rights have been terminated and not permanently reinstated, you do not qualify to receive new licenses for the same material under section 10.

9. Acceptance Not Required for Having Copies.

You are not required to accept this License in order to receive or run a copy of the Program. Ancillary propagation of a covered work occurring solely as a consequence of using peer-to-peer transmission to receive a copy likewise does not require acceptance. However, nothing other than this License grants you permission to propagate or modify any covered work. These actions infringe copyright if you do not accept this License. Therefore, by modifying or propagating a covered work, you indicate your acceptance of this License to do so.

10. Automatic Licensing of Downstream Recipients.

Each time you convey a covered work, the recipient automatically receives a license from the original licensors, to run, modify and propagate that work, subject to this License. You are not responsible for enforcing compliance by third parties with this License.

An "entity transaction" is a transaction transferring control of an organization, or substantially all assets of one, or subdividing an organization, or merging organizations. If propagation of a covered work results from an entity transaction, each party to that transaction who receives a copy of the work also receives whatever licenses to the work the party's predecessor in interest had or could give under the previous paragraph, plus a right to possession of the Corresponding Source of the work from the predecessor in interest, if the predecessor has it or can get it with reasonable efforts.

You may not impose any further restrictions on the exercise of the rights granted or affirmed under this License. For example, you may not impose a license fee, royalty, or other charge for exercise of rights granted under this License, and you may not initiate litigation (including a cross-claim or counterclaim in a lawsuit) alleging that any patent claim is infringed by making, using, selling, offering for sale, or importing the Program or any portion of it.

11. Patents.

A "contributor" is a copyright holder who authorizes use under this License of the Program or a work on which the Program is based. The work thus licensed is called the contributor's "contributor version".

A contributor's "essential patent claims" are all patent claims owned or controlled by the contributor, whether already acquired or hereafter acquired, that would be infringed by some manner, permitted by this License, of making, using, or selling its contributor version, but do not include claims that would be infringed only as a consequence of further modification of the contributor version. For purposes of this definition, "control" includes the right to grant patent sublicenses in a manner consistent with the requirements of this License.

Each contributor grants you a non-exclusive, worldwide, royalty-free patent license under the contributor's essential patent claims, to make, use, sell, offer for sale, import and otherwise run, modify and propagate the contents of its contributor version.

In the following three paragraphs, a "patent license" is any express agreement or commitment, however denominated, not to enforce a patent (such as an express permission to practice a patent or covenant not to sue for patent infringement). To "grant" such a patent license to a party means to make such an agreement or commitment not to enforce a patent against the party.

If you convey a covered work, knowingly relying on a patent license, and the Corresponding Source of the work is not available for anyone to copy, free of charge and under the terms of this License, through a publicly available network server or other readily accessible means, then you must either (1) cause the Corresponding Source to be so available, or (2) arrange to deprive yourself of the benefit of the patent license for this particular work, or (3) arrange, in a manner consistent with the requirements of this License, to extend the patent license to downstream recipients. "Knowingly relying" means you have actual knowledge that, but for the patent license, your conveying the

covered work in a country, or your recipient's use of the covered work in a country, would infringe one or more identifiable patents in that country that you have reason to believe are valid.

If, pursuant to or in connection with a single transaction or arrangement, you convey, or propagate by procuring conveyance of, a covered work, and grant a patent license to some of the parties receiving the covered work authorizing them to use, propagate, modify or convey a specific copy of the covered work, then the patent license you grant is automatically extended to all recipients of the covered work and works based on it.

A patent license is "discriminatory" if it does not include within the scope of its coverage, prohibits the exercise of, or is conditioned on the non-exercise of one or more of the rights that are specifically granted under this License. You may not convey a covered work if you are a party to an arrangement with a third party that is in the business of distributing software, under which you make payment to the third party based on the extent of your activity of conveying the work, and under which the third party grants, to any of the parties who would receive the covered work from you, a discriminatory patent license (a) in connection with copies of the covered work conveyed by you (or copies made from those copies), or (b) primarily for and in connection with specific products or compilations that contain the covered work, unless you entered into that arrangement, or that patent license was granted, prior to 28 March 2007.

Nothing in this License shall be construed as excluding or limiting any implied license or other defenses to infringement that may otherwise be available to you under applicable patent law.

12. No Surrender of Others' Freedom.

If conditions are imposed on you (whether by court order, agreement or otherwise) that contradict the conditions of this License, they do not excuse you from the conditions of this License. If you cannot convey a covered work so as to satisfy simultaneously your obligations under this License and any other pertinent obligations, then as a consequence you may not convey it at all. For example, if you agree to terms that obligate you to collect a royalty for further conveying from those to whom you convey the Program, the only way you could satisfy both those terms and this License would be to refrain entirely from conveying the Program.

13. Use with the GNU Affero General Public License.

Notwithstanding any other provision of this License, you have permission to link or combine any covered work with a work licensed under version 3 of the GNU Affero General Public License into a single combined work, and to convey the resulting work. The terms of this License will continue to apply to the part which is the covered work, but the special requirements of the GNU Affero General Public License, section 13, concerning interaction through a network will apply to the combination as such.

14. Revised Versions of this License.

The Free Software Foundation may publish revised and/or new versions of the GNU General Public License from time to time. Such new versions will be similar in spirit to the present version, but may differ in detail to address new problems or concerns.

Each version is given a distinguishing version number. If the Program specifies that a certain numbered version of the GNU General Public License "or any later version" applies to it, you have the option of following the terms and conditions either of that numbered version or of any later version published by the Free Software Foundation. If the Program does not specify a version number of the GNU General Public License, you may choose any version ever published by the Free Software Foundation.

If the Program specifies that a proxy can decide which future versions of the GNU General Public License can be used, that proxy's public statement of acceptance of a version permanently authorizes you

to choose that version for the Program.

Later license versions may give you additional or different permissions. However, no additional obligations are imposed on any author or copyright holder as a result of your choosing to follow a later version.

15. Disclaimer of Warranty.

THERE IS NO WARRANTY FOR THE PROGRAM, TO THE EXTENT PERMITTED BY APPLICABLE LAW. EXCEPT WHEN OTHERWISE STATED IN WRITING THE COPYRIGHT HOLDERS AND/OR OTHER PARTIES PROVIDE THE PROGRAM "AS IS" WITHOUT WARRANTY OF ANY KIND, EITHER EXPRESSED OR IMPLIED, INCLUDING, BUT NOT LIMITED TO, THE IMPLIED WARRANTIES OF MERCHANTABILITY AND FITNESS FOR A PARTICULAR PURPOSE. THE ENTIRE RISK AS TO THE QUALITY AND PERFORMANCE OF THE PROGRAM IS WITH YOU. SHOULD THE PROGRAM PROVE DEFECTIVE, YOU ASSUME THE COST OF ALL NECESSARY SERVICING, REPAIR OR CORRECTION.

16. Limitation of Liability.

IN NO EVENT UNLESS REQUIRED BY APPLICABLE LAW OR AGREED TO IN WRITING WILL ANY COPYRIGHT HOLDER, OR ANY OTHER PARTY WHO MODIFIES AND/OR CONVEYS THE PROGRAM AS PERMITTED ABOVE, BE LIABLE TO YOU FOR DAMAGES, INCLUDING ANY GENERAL, SPECIAL, INCIDENTAL OR CONSEQUENTIAL DAMAGES ARISING OUT OF THE USE OR INABILITY TO USE THE PROGRAM (INCLUDING BUT NOT LIMITED TO LOSS OF DATA OR DATA BEING RENDERED INACCURATE OR LOSSES SUSTAINED BY YOU OR THIRD PARTIES OR A FAILURE OF THE PROGRAM TO OPERATE WITH ANY OTHER PROGRAMS), EVEN IF SUCH HOLDER OR OTHER PARTY HAS BEEN ADVISED OF THE POSSIBILITY OF SUCH DAMAGES.

17. Interpretation of Sections 15 and 16.

If the disclaimer of warranty and limitation of liability provided above cannot be given local legal effect according to their terms, reviewing courts shall apply local law that most closely approximates an absolute waiver of all civil liability in connection with the Program, unless a warranty or assumption of liability accompanies a copy of the Program in return for a fee.

END OF TERMS AND CONDITIONS

C.4 LGPLv2.1

GNU LESSER GENERAL PUBLIC LICENSE
Version 2.1, February 1999

Copyright (C) 1991, 1999 Free Software Foundation, Inc.
51 Franklin Street, Fifth Floor, Boston, MA 02110-1301 USA
Everyone is permitted to copy and distribute verbatim copies
of this license document, but changing it is not allowed.

[This is the first released version of the Lesser GPL. It also counts as the successor of the GNU Library Public License, version 2, hence the version number 2.1.]

Preamble

The licenses for most software are designed to take away your freedom to share and change it. By contrast, the GNU General Public Licenses are intended to guarantee your freedom to share and change free software--to make sure the software is free for all its users.

This license, the Lesser General Public License, applies to some specially designated software packages--typically libraries--of the Free Software Foundation and other authors who decide to use it. You can use it too, but we suggest you first think carefully about whether this license or the ordinary General Public License is the better strategy to use in any particular case, based on the explanations below.

When we speak of free software, we are referring to freedom of use, not price. Our General Public Licenses are designed to make sure that you have the freedom to distribute copies of free software (and charge for this service if you wish); that you receive source code or can get it if you want it; that you can change the software and use pieces of it in new free programs; and that you are informed that you can do these things.

To protect your rights, we need to make restrictions that forbid distributors to deny you these rights or to ask you to surrender these rights. These restrictions translate to certain responsibilities for you if you distribute copies of the library or if you modify it.

For example, if you distribute copies of the library, whether gratis or for a fee, you must give the recipients all the rights that we gave you. You must make sure that they, too, receive or can get the source code. If you link other code with the library, you must provide complete object files to the recipients, so that they can relink them with the library after making changes to the library and recompiling it. And you must show them these terms so they know their rights.

We protect your rights with a two-step method: (1) we copyright the library, and (2) we offer you this license, which gives you legal permission to copy, distribute and/or modify the library.

To protect each distributor, we want to make it very clear that there is no warranty for the free library. Also, if the library is modified by someone else and passed on, the recipients should know that what they have is not the original version, so that the original author's reputation will not be affected by problems that might be introduced by others.

Finally, software patents pose a constant threat to the existence of any free program. We wish to make sure that a company cannot effectively restrict the users of a free program by obtaining a restrictive license from a patent holder. Therefore, we insist that any patent license obtained for a version of the library must be consistent with the full freedom of use specified in this license.

Most GNU software, including some libraries, is covered by the ordinary GNU General Public License. This license, the GNU Lesser General Public License, applies to certain designated libraries, and is quite different from the ordinary General Public License. We use this license for certain libraries in order to permit linking those

libraries into non-free programs.

When a program is linked with a library, whether statically or using a shared library, the combination of the two is legally speaking a combined work, a derivative of the original library. The ordinary General Public License therefore permits such linking only if the entire combination fits its criteria of freedom. The Lesser General Public License permits more lax criteria for linking other code with the library.

We call this license the "Lesser" General Public License because it does Less to protect the user's freedom than the ordinary General Public License. It also provides other free software developers Less of an advantage over competing non-free programs. These disadvantages are the reason we use the ordinary General Public License for many libraries. However, the Lesser license provides advantages in certain special circumstances.

For example, on rare occasions, there may be a special need to encourage the widest possible use of a certain library, so that it becomes a de-facto standard. To achieve this, non-free programs must be allowed to use the library. A more frequent case is that a free library does the same job as widely used non-free libraries. In this case, there is little to gain by limiting the free library to free software only, so we use the Lesser General Public License.

In other cases, permission to use a particular library in non-free programs enables a greater number of people to use a large body of free software. For example, permission to use the GNU C Library in non-free programs enables many more people to use the whole GNU operating system, as well as its variant, the GNU/Linux operating system.

Although the Lesser General Public License is Less protective of the users' freedom, it does ensure that the user of a program that is linked with the Library has the freedom and the wherewithal to run that program using a modified version of the Library.

The precise terms and conditions for copying, distribution and modification follow. Pay close attention to the difference between a "work based on the library" and a "work that uses the library". The former contains code derived from the library, whereas the latter must be combined with the library in order to run.

GNU LESSER GENERAL PUBLIC LICENSE
TERMS AND CONDITIONS FOR COPYING, DISTRIBUTION AND MODIFICATION

0. This License Agreement applies to any software library or other program which contains a notice placed by the copyright holder or other authorized party saying it may be distributed under the terms of this Lesser General Public License (also called "this License"). Each licensee is addressed as "you".

A "library" means a collection of software functions and/or data prepared so as to be conveniently linked with application programs (which use some of those functions and data) to form executables.

The "Library", below, refers to any such software library or work which has been distributed under these terms. A "work based on the Library" means either the Library or any derivative work under copyright law: that is to say, a work containing the Library or a portion of it, either verbatim or with modifications and/or translated straightforwardly into another language. (Hereinafter, translation is included without limitation in the term "modification".)

"Source code" for a work means the preferred form of the work for making modifications to it. For a library, complete source code means all the source code for all modules it contains, plus any associated interface definition files, plus the scripts used to control compilation and installation of the library.

Activities other than copying, distribution and modification are not covered by this License; they are outside its scope. The act of

running a program using the Library is not restricted, and output from such a program is covered only if its contents constitute a work based on the Library (independent of the use of the Library in a tool for writing it). Whether that is true depends on what the Library does and what the program that uses the Library does.

1. You may copy and distribute verbatim copies of the Library's complete source code as you receive it, in any medium, provided that you conspicuously and appropriately publish on each copy an appropriate copyright notice and disclaimer of warranty; keep intact all the notices that refer to this License and to the absence of any warranty; and distribute a copy of this License along with the Library.

You may charge a fee for the physical act of transferring a copy, and you may at your option offer warranty protection in exchange for a fee.

2. You may modify your copy or copies of the Library or any portion of it, thus forming a work based on the Library, and copy and distribute such modifications or work under the terms of Section 1 above, provided that you also meet all of these conditions:

a) The modified work must itself be a software library.

b) You must cause the files modified to carry prominent notices stating that you changed the files and the date of any change.

c) You must cause the whole of the work to be licensed at no charge to all third parties under the terms of this License.

d) If a facility in the modified Library refers to a function or a table of data to be supplied by an application program that uses the facility, other than as an argument passed when the facility is invoked, then you must make a good faith effort to ensure that, in the event an application does not supply such function or table, the facility still operates, and performs whatever part of its purpose remains meaningful.

(For example, a function in a library to compute square roots has a purpose that is entirely well-defined independent of the application. Therefore, Subsection 2d requires that any application-supplied function or table used by this function must be optional: if the application does not supply it, the square root function must still compute square roots.)

These requirements apply to the modified work as a whole. If identifiable sections of that work are not derived from the Library, and can be reasonably considered independent and separate works in themselves, then this License, and its terms, do not apply to those sections when you distribute them as separate works. But when you distribute the same sections as part of a whole which is a work based on the Library, the distribution of the whole must be on the terms of this License, whose permissions for other licensees extend to the entire whole, and thus to each and every part regardless of who wrote it.

Thus, it is not the intent of this section to claim rights or contest your rights to work written entirely by you; rather, the intent is to exercise the right to control the distribution of derivative or collective works based on the Library.

In addition, mere aggregation of another work not based on the Library with the Library (or with a work based on the Library) on a volume of a storage or distribution medium does not bring the other work under the scope of this License.

3. You may opt to apply the terms of the ordinary GNU General Public License instead of this License to a given copy of the Library. To do this, you must alter all the notices that refer to this License, so that they refer to the ordinary GNU General Public License, version 2, instead of to this License. (If a newer version than version 2 of the ordinary GNU General Public License has appeared, then you can specify

that version instead if you wish.) Do not make any other change in these notices.

Once this change is made in a given copy, it is irreversible for that copy, so the ordinary GNU General Public License applies to all subsequent copies and derivative works made from that copy.

This option is useful when you wish to copy part of the code of the Library into a program that is not a library.

4. You may copy and distribute the Library (or a portion or derivative of it, under Section 2) in object code or executable form under the terms of Sections 1 and 2 above provided that you accompany it with the complete corresponding machine-readable source code, which must be distributed under the terms of Sections 1 and 2 above on a medium customarily used for software interchange.

If distribution of object code is made by offering access to copy from a designated place, then offering equivalent access to copy the source code from the same place satisfies the requirement to distribute the source code, even though third parties are not compelled to copy the source along with the object code.

5. A program that contains no derivative of any portion of the Library, but is designed to work with the Library by being compiled or linked with it, is called a "work that uses the Library". Such a work, in isolation, is not a derivative work of the Library, and therefore falls outside the scope of this License.

However, linking a "work that uses the Library" with the Library creates an executable that is a derivative of the Library (because it contains portions of the Library), rather than a "work that uses the library". The executable is therefore covered by this License. Section 6 states terms for distribution of such executables.

When a "work that uses the Library" uses material from a header file that is part of the Library, the object code for the work may be a derivative work of the Library even though the source code is not. Whether this is true is especially significant if the work can be linked without the Library, or if the work is itself a library. The threshold for this to be true is not precisely defined by law.

If such an object file uses only numerical parameters, data structure layouts and accessors, and small macros and small inline functions (ten lines or less in length), then the use of the object file is unrestricted, regardless of whether it is legally a derivative work. (Executables containing this object code plus portions of the Library will still fall under Section 6.)

Otherwise, if the work is a derivative of the Library, you may distribute the object code for the work under the terms of Section 6. Any executables containing that work also fall under Section 6, whether or not they are linked directly with the Library itself.

6. As an exception to the Sections above, you may also combine or link a "work that uses the Library" with the Library to produce a work containing portions of the Library, and distribute that work under terms of your choice, provided that the terms permit modification of the work for the customer's own use and reverse engineering for debugging such modifications.

You must give prominent notice with each copy of the work that the Library is used in it and that the Library and its use are covered by this License. You must supply a copy of this License. If the work during execution displays copyright notices, you must include the copyright notice for the Library among them, as well as a reference directing the user to the copy of this License. Also, you must do one of these things:

a) Accompany the work with the complete corresponding machine-readable source code for the Library including whatever changes were used in the work (which must be distributed under Sections 1 and 2 above); and, if the work is an executable linked

with the Library, with the complete machine-readable "work that uses the Library", as object code and/or source code, so that the user can modify the Library and then relink to produce a modified executable containing the modified Library. (It is understood that the user who changes the contents of definitions files in the Library will not necessarily be able to recompile the application to use the modified definitions.)

b) Use a suitable shared library mechanism for linking with the Library. A suitable mechanism is one that (1) uses at run time a copy of the library already present on the user's computer system, rather than copying library functions into the executable, and (2) will operate properly with a modified version of the library, if the user installs one, as long as the modified version is interface-compatible with the version that the work was made with.

c) Accompany the work with a written offer, valid for at least three years, to give the same user the materials specified in Subsection 6a, above, for a charge no more than the cost of performing this distribution.

d) If distribution of the work is made by offering access to copy from a designated place, offer equivalent access to copy the above specified materials from the same place.

e) Verify that the user has already received a copy of these materials or that you have already sent this user a copy.

For an executable, the required form of the "work that uses the Library" must include any data and utility programs needed for reproducing the executable from it. However, as a special exception, the materials to be distributed need not include anything that is normally distributed (in either source or binary form) with the major components (compiler, kernel, and so on) of the operating system on which the executable runs, unless that component itself accompanies the executable.

It may happen that this requirement contradicts the license restrictions of other proprietary libraries that do not normally accompany the operating system. Such a contradiction means you cannot use both them and the Library together in an executable that you distribute.

7. You may place library facilities that are a work based on the Library side-by-side in a single library together with other library facilities not covered by this License, and distribute such a combined library, provided that the separate distribution of the work based on the Library and of the other library facilities is otherwise permitted, and provided that you do these two things:

a) Accompany the combined library with a copy of the same work based on the Library, uncombined with any other library facilities. This must be distributed under the terms of the Sections above.

b) Give prominent notice with the combined library of the fact that part of it is a work based on the Library, and explaining where to find the accompanying uncombined form of the same work.

8. You may not copy, modify, sublicense, link with, or distribute the Library except as expressly provided under this License. Any attempt otherwise to copy, modify, sublicense, link with, or distribute the Library is void, and will automatically terminate your rights under this License. However, parties who have received copies, or rights, from you under this License will not have their licenses terminated so long as such parties remain in full compliance.

9. You are not required to accept this License, since you have not signed it. However, nothing else grants you permission to modify or distribute the Library or its derivative works. These actions are prohibited by law if you do not accept this License. Therefore, by modifying or distributing the Library (or any work based on the Library), you indicate your acceptance of this License to do so, and

all its terms and conditions for copying, distributing or modifying the Library or works based on it.

10. Each time you redistribute the Library (or any work based on the Library), the recipient automatically receives a license from the original licensor to copy, distribute, link with or modify the Library subject to these terms and conditions. You may not impose any further restrictions on the recipients' exercise of the rights granted herein. You are not responsible for enforcing compliance by third parties with this License.

11. If, as a consequence of a court judgment or allegation of patent infringement or for any other reason (not limited to patent issues), conditions are imposed on you (whether by court order, agreement or otherwise) that contradict the conditions of this License, they do not excuse you from the conditions of this License. If you cannot distribute so as to satisfy simultaneously your obligations under this License and any other pertinent obligations, then as a consequence you may not distribute the Library at all. For example, if a patent license would not permit royalty-free redistribution of the Library by all those who receive copies directly or indirectly through you, then the only way you could satisfy both it and this License would be to refrain entirely from distribution of the Library.

If any portion of this section is held invalid or unenforceable under any particular circumstance, the balance of the section is intended to apply, and the section as a whole is intended to apply in other circumstances.

It is not the purpose of this section to induce you to infringe any patents or other property right claims or to contest validity of any such claims; this section has the sole purpose of protecting the integrity of the free software distribution system which is implemented by public license practices. Many people have made generous contributions to the wide range of software distributed through that system in reliance on consistent application of that system; it is up to the author/donor to decide if he or she is willing to distribute software through any other system and a licensee cannot impose that choice.

This section is intended to make thoroughly clear what is believed to be a consequence of the rest of this License.

12. If the distribution and/or use of the Library is restricted in certain countries either by patents or by copyrighted interfaces, the original copyright holder who places the Library under this License may add an explicit geographical distribution limitation excluding those countries, so that distribution is permitted only in or among countries not thus excluded. In such case, this License incorporates the limitation as if written in the body of this License.

13. The Free Software Foundation may publish revised and/or new versions of the Lesser General Public License from time to time. Such new versions will be similar in spirit to the present version, but may differ in detail to address new problems or concerns.

Each version is given a distinguishing version number. If the Library specifies a version number of this License which applies to it and "any later version", you have the option of following the terms and conditions either of that version or of any later version published by the Free Software Foundation. If the Library does not specify a license version number, you may choose any version ever published by the Free Software Foundation.

14. If you wish to incorporate parts of the Library into other free programs whose distribution conditions are incompatible with these, write to the author to ask for permission. For software which is copyrighted by the Free Software Foundation, write to the Free Software Foundation; we sometimes make exceptions for this. Our decision will be guided by the two goals of preserving the free status of all derivatives of our free software and of promoting the sharing and reuse of software generally.

NO WARRANTY

15. BECAUSE THE LIBRARY IS LICENSED FREE OF CHARGE, THERE IS NO WARRANTY FOR THE LIBRARY, TO THE EXTENT PERMITTED BY APPLICABLE LAW. EXCEPT WHEN OTHERWISE STATED IN WRITING THE COPYRIGHT HOLDERS AND/OR OTHER PARTIES PROVIDE THE LIBRARY "AS IS" WITHOUT WARRANTY OF ANY KIND, EITHER EXPRESSED OR IMPLIED, INCLUDING, BUT NOT LIMITED TO, THE IMPLIED WARRANTIES OF MERCHANTABILITY AND FITNESS FOR A PARTICULAR PURPOSE. THE ENTIRE RISK AS TO THE QUALITY AND PERFORMANCE OF THE LIBRARY IS WITH YOU. SHOULD THE LIBRARY PROVE DEFECTIVE, YOU ASSUME THE COST OF ALL NECESSARY SERVICING, REPAIR OR CORRECTION.

16. IN NO EVENT UNLESS REQUIRED BY APPLICABLE LAW OR AGREED TO IN WRITING WILL ANY COPYRIGHT HOLDER, OR ANY OTHER PARTY WHO MAY MODIFY AND/OR REDISTRIBUTE THE LIBRARY AS PERMITTED ABOVE, BE LIABLE TO YOU FOR DAMAGES, INCLUDING ANY GENERAL, SPECIAL, INCIDENTAL OR CONSEQUENTIAL DAMAGES ARISING OUT OF THE USE OR INABILITY TO USE THE LIBRARY (INCLUDING BUT NOT LIMITED TO LOSS OF DATA OR DATA BEING RENDERED INACCURATE OR LOSSES SUSTAINED BY YOU OR THIRD PARTIES OR A FAILURE OF THE LIBRARY TO OPERATE WITH ANY OTHER SOFTWARE), EVEN IF SUCH HOLDER OR OTHER PARTY HAS BEEN ADVISED OF THE POSSIBILITY OF SUCH DAMAGES.

END OF TERMS AND CONDITIONS

C.5 iputils

Copyright (c) 1989 The Regents of the University of California.
All rights reserved.

This code is derived from software contributed to Berkeley by
Mike Muuss.

Redistribution and use in source and binary forms, with or without
modification, are permitted provided that the following conditions
are met:
1. Redistributions of source code must retain the above copyright
notice, this list of conditions and the following disclaimer.
2. Redistributions in binary form must reproduce the above copyright
notice, this list of conditions and the following disclaimer in the
documentation and/or other materials provided with the distribution.
3. All advertising materials mentioning features or use of this software
must display the following acknowledgement:
This product includes software developed by the University of
California, Berkeley and its contributors.
4. Neither the name of the University nor the names of its contributors
may be used to endorse or promote products derived from this software
without specific prior written permission.

THIS SOFTWARE IS PROVIDED BY THE REGENTS AND CONTRIBUTORS ``AS IS'' AND
ANY EXPRESS OR IMPLIED WARRANTIES, INCLUDING, BUT NOT LIMITED TO, THE
IMPLIED WARRANTIES OF MERCHANTABILITY AND FITNESS FOR A PARTICULAR PURPOSE
ARE DISCLAIMED. IN NO EVENT SHALL THE REGENTS OR CONTRIBUTORS BE LIABLE
FOR ANY DIRECT, INDIRECT, INCIDENTAL, SPECIAL, EXEMPLARY, OR CONSEQUENTIAL
DAMAGES (INCLUDING, BUT NOT LIMITED TO, PROCUREMENT OF SUBSTITUTE GOODS
OR SERVICES; LOSS OF USE, DATA, OR PROFITS; OR BUSINESS INTERRUPTION)
HOWEVER CAUSED AND ON ANY THEORY OF LIABILITY, WHETHER IN CONTRACT, STRICT
LIABILITY, OR TORT (INCLUDING NEGLIGENCE OR OTHERWISE) ARISING IN ANY WAY
OUT OF THE USE OF THIS SOFTWARE, EVEN IF ADVISED OF THE POSSIBILITY OF
SUCH DAMAGE.

C.6 ntpd

(Copyright (c) University of Delaware 1992-2011

Permission to use, copy, modify, and distribute this software and its documentation for any purpose with or without fee is hereby granted, provided that the above copyright notice appears in all copies and that both the copyright notice and this permission notice appear in supporting documentation, and that the name University of Delaware not be used in advertising or publicity pertaining to distribution of the software without specific, written prior permission. The University of Delaware makes no representations about the suitability this software for any purpose. It is provided "as is" without express or implied

warranty.

C.7 libuuid

Copyright (C) 1996, 1997, 1998, 1999, 2007 Theodore Ts'o.

Redistribution and use in source and binary forms, with or without modification, are permitted provided that the following conditions are met:
1. Redistributions of source code must retain the above copyright notice, and the entire permission notice in its entirety, including the disclaimer of warranties.
2. Redistributions in binary form must reproduce the above copyright notice, this list of conditions and the following disclaimer in the documentation and/or other materials provided with the distribution.
3. The name of the author may not be used to endorse or promote products derived from this software without specific prior written permission.

THIS SOFTWARE IS PROVIDED ``AS IS'' AND ANY EXPRESS OR IMPLIED WARRANTIES, INCLUDING, BUT NOT LIMITED TO, THE IMPLIED WARRANTIES OF MERCHANTABILITY AND FITNESS FOR A PARTICULAR PURPOSE, ALL OF WHICH ARE HEREBY DISCLAIMED. IN NO EVENT SHALL THE AUTHOR BE LIABLE FOR ANY DIRECT, INDIRECT, INCIDENTAL, SPECIAL, EXEMPLARY, OR CONSEQUENTIAL DAMAGES (INCLUDING, BUT NOT LIMITED TO, PROCUREMENT OF SUBSTITUTE GOODS OR SERVICES; LOSS OF USE, DATA, OR PROFITS; OR BUSINESS INTERRUPTION) HOWEVER CAUSED AND ON ANY THEORY OF LIABILITY, WHETHER IN CONTRACT, STRICT LIABILITY, OR TORT (INCLUDING NEGLIGENCE OR OTHERWISE) ARISING IN ANY WAY OUT OF THE USE OF THIS SOFTWARE, EVEN IF NOT ADVISED OF THE POSSIBILITY OF SUCH DAMAGE.

C.8 sudo

Sudo is distributed under the following license:

Copyright (c) 1994-1996, 1998-2013
Todd C. Miller <Todd.Miller@courtesan.com>

Permission to use, copy, modify, and distribute this software for any purpose with or without fee is hereby granted, provided that the above copyright notice and this permission notice appear in all copies.

THE SOFTWARE IS PROVIDED "AS IS" AND THE AUTHOR DISCLAIMS ALL WARRANTIES WITH REGARD TO THIS SOFTWARE INCLUDING ALL IMPLIED WARRANTIES OF MERCHANTABILITY AND FITNESS. IN NO EVENT SHALL THE AUTHOR BE LIABLE FOR ANY SPECIAL, DIRECT, INDIRECT, OR CONSEQUENTIAL DAMAGES OR ANY DAMAGES WHATSOEVER RESULTING FROM LOSS OF USE, DATA OR PROFITS, WHETHER IN AN ACTION OF CONTRACT, NEGLIGENCE OR OTHER TORTIOUS ACTION, ARISING OUT OF OR IN CONNECTION WITH THE USE OR PERFORMANCE OF THIS SOFTWARE.

Sponsored in part by the Defense Advanced Research Projects Agency (DARPA) and Air Force Research Laboratory, Air Force Materiel Command, USAF, under agreement number F39502-99-1-0512.

The file redblack.c bears the following license:

Copyright (c) 2001 Emin Martinian

Redistribution and use in source and binary forms, with or without modification, are permitted provided that neither the name of Emin Martinian nor the names of any contributors are be used to endorse or promote products derived from this software without specific prior written permission.

THIS SOFTWARE IS PROVIDED BY THE COPYRIGHT HOLDERS AND CONTRIBUTORS "AS IS" AND ANY EXPRESS OR IMPLIED WARRANTIES, INCLUDING, BUT NOT LIMITED TO, THE IMPLIED WARRANTIES OF MERCHANTABILITY AND FITNESS FOR A PARTICULAR PURPOSE ARE DISCLAIMED. IN NO EVENT SHALL THE COPYRIGHT OWNER OR CONTRIBUTORS BE LIABLE FOR ANY DIRECT, INDIRECT, INCIDENTAL, SPECIAL, EXEMPLARY, OR CONSEQUENTIAL DAMAGES (INCLUDING, BUT NOT LIMITED TO, PROCUREMENT OF SUBSTITUTE GOODS OR SERVICES; LOSS OF USE, DATA, OR PROFITS; OR BUSINESS INTERRUPTION) HOWEVER CAUSED AND ON ANY THEORY OF LIABILITY, WHETHER IN CONTRACT, STRICT LIABILITY, OR TORT (INCLUDING NEGLIGENCE OR OTHERWISE) ARISING IN ANY WAY OUT OF THE USE OF THIS SOFTWARE, EVEN IF ADVISED OF THE POSSIBILITY OF SUCH DAMAGE.

The files getcwd.c, glob.c, glob.h and snprintf.c bear the following license:

Copyright (c) 1989, 1990, 1991, 1993
The Regents of the University of California. All rights reserved.

Redistribution and use in source and binary forms, with or without modification, are permitted provided that the following conditions are met:
1. Redistributions of source code must retain the above copyright notice, this list of conditions and the following disclaimer.
2. Redistributions in binary form must reproduce the above copyright notice, this list of conditions and the following disclaimer in the documentation and/or other materials provided with the distribution.
3. Neither the name of the University nor the names of its contributors may be used to endorse or promote products derived from this software without specific prior written permission.

THIS SOFTWARE IS PROVIDED BY THE REGENTS AND CONTRIBUTORS ``AS IS'' AND ANY EXPRESS OR IMPLIED WARRANTIES, INCLUDING, BUT NOT LIMITED TO, THE IMPLIED WARRANTIES OF MERCHANTABILITY AND FITNESS FOR A PARTICULAR PURPOSE ARE DISCLAIMED. IN NO EVENT SHALL THE REGENTS OR CONTRIBUTORS BE LIABLE FOR ANY DIRECT, INDIRECT, INCIDENTAL, SPECIAL, EXEMPLARY, OR CONSEQUENTIAL DAMAGES (INCLUDING, BUT NOT LIMITED TO, PROCUREMENT OF SUBSTITUTE GOODS OR SERVICES; LOSS OF USE, DATA, OR PROFITS; OR BUSINESS INTERRUPTION) HOWEVER CAUSED AND ON ANY THEORY OF LIABILITY, WHETHER IN CONTRACT, STRICT LIABILITY, OR TORT (INCLUDING NEGLIGENCE OR OTHERWISE) ARISING IN ANY WAY OUT OF THE USE OF THIS SOFTWARE, EVEN IF ADVISED OF THE POSSIBILITY OF

SUCH DAMAGE.

The file fnmatch.c bears the following license:

Copyright (c) 2011, VMware, Inc.
All rights reserved.

Redistribution and use in source and binary forms, with or without modification, are permitted provided that the following conditions are met:
* Redistributions of source code must retain the above copyright notice, this list of conditions and the following disclaimer.
* Redistributions in binary form must reproduce the above copyright notice, this list of conditions and the following disclaimer in the documentation and/or other materials provided with the distribution.
* Neither the name of the VMware, Inc. nor the names of its contributors may be used to endorse or promote products derived from this software without specific prior written permission.

THIS SOFTWARE IS PROVIDED BY THE COPYRIGHT HOLDERS AND CONTRIBUTORS "AS IS" AND ANY EXPRESS OR IMPLIED WARRANTIES, INCLUDING, BUT NOT LIMITED TO, THE IMPLIED WARRANTIES OF MERCHANTABILITY AND FITNESS FOR A PARTICULAR PURPOSE ARE DISCLAIMED. IN NO EVENT SHALL VMWARE, INC. OR CONTRIBUTORS BE LIABLE FOR ANY DIRECT, INDIRECT, INCIDENTAL, SPECIAL, EXEMPLARY, OR CONSEQUENTIAL DAMAGE
S
(INCLUDING, BUT NOT LIMITED TO, PROCUREMENT OF SUBSTITUTE GOODS OR SERVICES; LOSS OF USE, DATA, OR PROFITS; OR BUSINESS INTERRUPTION) HOWEVER CAUSED AND ON ANY THEORY OF LIABILITY, WHETHER IN CONTRACT, STRICT LIABILITY, OR TORT (INCLUDING NEGLIGENCE OR OTHERWISE) ARISING IN ANY WAY OUT OF THE USE OF THIS SOFTWARE, EVEN IF ADVISED OF THE POSSIBILITY OF SUCH DAMAGE.

The embedded copy of zlib bears the following license:

Copyright (C) 1995-2012 Jean-loup Gailly and Mark Adler

This software is provided 'as-is', without any express or implied warranty. In no event will the authors be held liable for any damages arising from the use of this software.

Permission is granted to anyone to use this software for any purpose, including commercial applications, and to alter it and redistribute it freely, subject to the following restrictions:

1. The origin of this software must not be misrepresented; you must not claim that you wrote the original software. If you use this software in a product, an acknowledgment in the product documentation would be appreciated but is not required.
2. Altered source versions must be plainly marked as such, and must not be misrepresented as being the original software.
3. This notice may not be removed or altered from any source distribution.

Jean-loup Gailly Mark Adler
jloup@gzip.org madler@alumni.caltech.edu

C.9 openssh

This file is part of the OpenSSH software.

The licences which components of this software fall under are as follows. First, we will summarize and say that all components are under a BSD licence, or a licence more free than that.

OpenSSH contains no GPL code.

1)
Copyright (c) 1995 Tatu Ylonen <ylo@cs.hut.fi>, Espoo, Finland
All rights reserved

As far as I am concerned, the code I have written for this software can be used freely for any purpose. Any derived versions of this software must be clearly marked as such, and if the derived work is incompatible with the protocol description in the RFC file, it must be called by a name other than "ssh" or "Secure Shell".

[Tatu continues]
However, I am not implying to give any licenses to any patents or copyrights held by third parties, and the software includes parts that are not under my direct control. As far as I know, all included source code is used in accordance with the relevant license agreements and can be used freely for any purpose (the GNU license being the most restrictive); see below for details.

[However, none of that term is relevant at this point in time. All of these restrictively licenced software components which he talks about have been removed from OpenSSH, i.e.,

- RSA is no longer included, found in the OpenSSL library
- IDEA is no longer included, its use is deprecated
- DES is now external, in the OpenSSL library
- GMP is no longer used, and instead we call BN code from OpenSSL
- Zlib is now external, in a library
- The make-ssh-known-hosts script is no longer included
- TSS has been removed
- MD5 is now external, in the OpenSSL library
- RC4 support has been replaced with ARC4 support from OpenSSL
- Blowfish is now external, in the OpenSSL library

[The licence continues]

Note that any information and cryptographic algorithms used in this software are publicly available on the Internet and at any major bookstore, scientific library, and patent office worldwide. More information can be found e.g. at "http://www.cs.hut.fi/crypto".

The legal status of this program is some combination of all these permissions and restrictions. Use only at your own responsibility. You will be responsible for any legal consequences yourself; I am not making any claims whether possessing or using this is legal or not in your country, and I am not taking any responsibility on your behalf.

NO WARRANTY

BECAUSE THE PROGRAM IS LICENSED FREE OF CHARGE, THERE IS NO WARRANTY FOR THE PROGRAM, TO THE EXTENT PERMITTED BY APPLICABLE LAW. EXCEPT WHEN OTHERWISE STATED IN WRITING THE COPYRIGHT HOLDERS AND/OR OTHER PARTIES PROVIDE THE PROGRAM "AS IS" WITHOUT WARRANTY OF ANY KIND, EITHER EXPRESSED OR IMPLIED, INCLUDING, BUT NOT LIMITED TO, THE IMPLIED WARRANTIES OF MERCHANTABILITY AND FITNESS FOR A PARTICULAR PURPOSE. THE ENTIRE RISK AS TO THE QUALITY AND PERFORMANCE OF THE PROGRAM IS WITH YOU. SHOULD THE PROGRAM PROVE DEFECTIVE, YOU ASSUME THE COST OF ALL NECESSARY SERVICING, REPAIR OR CORRECTION.

IN NO EVENT UNLESS REQUIRED BY APPLICABLE LAW OR AGREED TO IN WRITING WILL ANY COPYRIGHT HOLDER, OR ANY OTHER PARTY WHO MAY MODIFY AND/OR REDISTRIBUTE THE PROGRAM AS PERMITTED ABOVE, BE LIABLE TO YOU FOR DAMAGES,

INCLUDING ANY GENERAL, SPECIAL, INCIDENTAL OR CONSEQUENTIAL DAMAGES ARISING OUT OF THE USE OR INABILITY TO USE THE PROGRAM (INCLUDING BUT NOT LIMITED TO LOSS OF DATA OR DATA BEING RENDERED INACCURATE OR LOSSES SUSTAINED BY YOU OR THIRD PARTIES OR A FAILURE OF THE PROGRAM TO OPERATE WITH ANY OTHER PROGRAMS), EVEN IF SUCH HOLDER OR OTHER PARTY HAS BEEN ADVISED OF THE POSSIBILITY OF SUCH DAMAGES.

2)
The 32-bit CRC compensation attack detector in deattack.c was contributed by CORE SDI S.A. under a BSD-style license.

Cryptographic attack detector for ssh - source code

Copyright (c) 1998 CORE SDI S.A., Buenos Aires, Argentina.

All rights reserved. Redistribution and use in source and binary forms, with or without modification, are permitted provided that this copyright notice is retained.

THIS SOFTWARE IS PROVIDED ``AS IS'' AND ANY EXPRESS OR IMPLIED WARRANTIES ARE DISCLAIMED. IN NO EVENT SHALL CORE SDI S.A. BE LIABLE FOR ANY DIRECT, INDIRECT, INCIDENTAL, SPECIAL, EXEMPLARY OR CONSEQUENTIAL DAMAGES RESULTING FROM THE USE OR MISUSE OF THIS SOFTWARE.

Ariel Futoransky <futo@core-sdi.com>
<http://www.core-sdi.com>

3)
ssh-keyscan was contributed by David Mazieres under a BSD-style license.

Copyright 1995, 1996 by David Mazieres <dm@lcs.mit.edu>.

Modification and redistribution in source and binary forms is permitted provided that due credit is given to the author and the OpenBSD project by leaving this copyright notice intact.

4)
The Rijndael implementation by Vincent Rijmen, Antoon Bosselaers and Paulo Barreto is in the public domain and distributed with the following license:

@version 3.0 (December 2000)

Optimised ANSI C code for the Rijndael cipher (now AES)

@author Vincent Rijmen <vincent.rijmen@esat.kuleuven.ac.be>
@author Antoon Bosselaers <antoon.bosselaers@esat.kuleuven.ac.be>
@author Paulo Barreto <paulo.barreto@terra.com.br>

This code is hereby placed in the public domain.

THIS SOFTWARE IS PROVIDED BY THE AUTHORS ''AS IS'' AND ANY EXPRESS OR IMPLIED WARRANTIES, INCLUDING, BUT NOT LIMITED TO, THE IMPLIED WARRANTIES OF MERCHANTABILITY AND FITNESS FOR A PARTICULAR PURPOSE ARE DISCLAIMED. IN NO EVENT SHALL THE AUTHORS OR CONTRIBUTORS BE LIABLE FOR ANY DIRECT, INDIRECT, INCIDENTAL, SPECIAL, EXEMPLARY, OR CONSEQUENTIAL DAMAGES (INCLUDING, BUT NOT LIMITED TO, PROCUREMENT OF SUBSTITUTE GOODS OR SERVICES; LOSS OF USE, DATA, OR PROFITS; OR BUSINESS INTERRUPTION) HOWEVER CAUSED AND ON ANY THEORY OF LIABILITY, WHETHER IN CONTRACT, STRICT LIABILITY, OR TORT (INCLUDING NEGLIGENCE OR OTHERWISE) ARISING IN ANY WAY OUT OF THE USE OF THIS SOFTWARE, EVEN IF ADVISED OF THE POSSIBILITY OF SUCH DAMAGE.

5)
One component of the ssh source code is under a 3-clause BSD license, held by the University of California, since we pulled these parts from original Berkeley code.
Copyright (c) 1983, 1990, 1992, 1993, 1995
The Regents of the University of California. All rights reserved.

Redistribution and use in source and binary forms, with or without

modification, are permitted provided that the following conditions
are met:
1. Redistributions of source code must retain the above copyright
notice, this list of conditions and the following disclaimer.
2. Redistributions in binary form must reproduce the above copyright
notice, this list of conditions and the following disclaimer in the
documentation and/or other materials provided with the distribution.
3. Neither the name of the University nor the names of its contributors
may be used to endorse or promote products derived from this software
without specific prior written permission.

THIS SOFTWARE IS PROVIDED BY THE REGENTS AND CONTRIBUTORS ``AS IS'' AND
ANY EXPRESS OR IMPLIED WARRANTIES, INCLUDING, BUT NOT LIMITED TO, THE
IMPLIED WARRANTIES OF MERCHANTABILITY AND FITNESS FOR A PARTICULAR PURPOSE
ARE DISCLAIMED. IN NO EVENT SHALL THE REGENTS OR CONTRIBUTORS BE LIABLE
FOR ANY DIRECT, INDIRECT, INCIDENTAL, SPECIAL, EXEMPLARY, OR CONSEQUENTIAL
DAMAGES (INCLUDING, BUT NOT LIMITED TO, PROCUREMENT OF SUBSTITUTE GOODS
OR SERVICES; LOSS OF USE, DATA, OR PROFITS; OR BUSINESS INTERRUPTION)
HOWEVER CAUSED AND ON ANY THEORY OF LIABILITY, WHETHER IN CONTRACT, STRICT
LIABILITY, OR TORT (INCLUDING NEGLIGENCE OR OTHERWISE) ARISING IN ANY WAY
OUT OF THE USE OF THIS SOFTWARE, EVEN IF ADVISED OF THE POSSIBILITY OF
SUCH DAMAGE.

6)
Remaining components of the software are provided under a standard
2-term BSD licence with the following names as copyright holders:

Markus Friedl
Theo de Raadt
Niels Provos
Dug Song
Aaron Campbell
Damien Miller
Kevin Steves
Daniel Kouril
Wesley Griffin
Per Allansson
Nils Nordman
Simon Wilkinson

Portable OpenSSH additionally includes code from the following copyright
holders, also under the 2-term BSD license:

Ben Lindstrom
Tim Rice
Andre Lucas
Chris Adams
Corinna Vinschen
Cray Inc.
Denis Parker
Gert Doering
Jakob Schlyter
Jason Downs
Juha Yrj
Michael Stone
Networks Associates Technology, Inc.
Solar Designer
Todd C. Miller
Wayne Schroeder
William Jones
Darren Tucker
Sun Microsystems
The SCO Group
Daniel Walsh
Red Hat, Inc
Simon Vallet / Genoscope

Redistribution and use in source and binary forms, with or without
modification, are permitted provided that the following conditions
are met:
1. Redistributions of source code must retain the above copyright
notice, this list of conditions and the following disclaimer.
2. Redistributions in binary form must reproduce the above copyright

notice, this list of conditions and the following disclaimer in the
documentation and/or other materials provided with the distribution.

THIS SOFTWARE IS PROVIDED BY THE AUTHOR ``AS IS'' AND ANY EXPRESS OR
IMPLIED WARRANTIES, INCLUDING, BUT NOT LIMITED TO, THE IMPLIED WARRANTIES
OF MERCHANTABILITY AND FITNESS FOR A PARTICULAR PURPOSE ARE DISCLAIMED.
IN NO EVENT SHALL THE AUTHOR BE LIABLE FOR ANY DIRECT, INDIRECT,
INCIDENTAL, SPECIAL, EXEMPLARY, OR CONSEQUENTIAL DAMAGES (INCLUDING, BUT
NOT LIMITED TO, PROCUREMENT OF SUBSTITUTE GOODS OR SERVICES; LOSS OF USE,
DATA, OR PROFITS; OR BUSINESS INTERRUPTION) HOWEVER CAUSED AND ON ANY
THEORY OF LIABILITY, WHETHER IN CONTRACT, STRICT LIABILITY, OR TORT
(INCLUDING NEGLIGENCE OR OTHERWISE) ARISING IN ANY WAY OUT OF THE USE OF
THIS SOFTWARE, EVEN IF ADVISED OF THE POSSIBILITY OF SUCH DAMAGE.

8) Portable OpenSSH contains the following additional licenses:

a) md5crypt.c, md5crypt.h

"THE BEER-WARE LICENSE" (Revision 42):
<phk@login.dknet.dk> wrote this file. As long as you retain this
notice you can do whatever you want with this stuff. If we meet
some day, and you think this stuff is worth it, you can buy me a
beer in return. Poul-Henning Kamp

b) snprintf replacement

Copyright Patrick Powell 1995
This code is based on code written by Patrick Powell
(papowell@astart.com) It may be used for any purpose as long as this
notice remains intact on all source code distributions

c) Compatibility code (openbsd-compat)

Apart from the previously mentioned licenses, various pieces of code
in the openbsd-compat/ subdirectory are licensed as follows:

Some code is licensed under a 3-term BSD license, to the following
copyright holders:

Todd C. Miller
Theo de Raadt
Damien Miller
Eric P. Allman
The Regents of the University of California
Constantin S. Svintsoff

Redistribution and use in source and binary forms, with or without
modification, are permitted provided that the following conditions
are met:
1. Redistributions of source code must retain the above copyright
notice, this list of conditions and the following disclaimer.
2. Redistributions in binary form must reproduce the above copyright
notice, this list of conditions and the following disclaimer in the
documentation and/or other materials provided with the distribution
.
3. Neither the name of the University nor the names of its contributors
may be used to endorse or promote products derived from this software
without specific prior written permission.

THIS SOFTWARE IS PROVIDED BY THE REGENTS AND CONTRIBUTORS ``AS IS'' AND
ANY EXPRESS OR IMPLIED WARRANTIES, INCLUDING, BUT NOT LIMITED TO, THE
IMPLIED WARRANTIES OF MERCHANTABILITY AND FITNESS FOR A PARTICULAR PURPOSE
ARE DISCLAIMED. IN NO EVENT SHALL THE REGENTS OR CONTRIBUTORS BE LIABLE
FOR ANY DIRECT, INDIRECT, INCIDENTAL, SPECIAL, EXEMPLARY, OR CONSEQUENTIAL
DAMAGES (INCLUDING, BUT NOT LIMITED TO, PROCUREMENT OF SUBSTITUTE GOODS
OR SERVICES; LOSS OF USE, DATA, OR PROFITS; OR BUSINESS INTERRUPTION)
HOWEVER CAUSED AND ON ANY THEORY OF LIABILITY, WHETHER IN CONTRACT, STRICT
LIABILITY, OR TORT (INCLUDING NEGLIGENCE OR OTHERWISE) ARISING IN ANY WAY
OUT OF THE USE OF THIS SOFTWARE, EVEN IF ADVISED OF THE POSSIBILITY OF
SUCH DAMAGE.

Some code is licensed under an ISC-style license, to the following
copyright holders:

Internet Software Consortium.
Todd C. Miller
Reyk Floeter
Chad Mynhier

Permission to use, copy, modify, and distribute this software for any purpose with or without fee is hereby granted, provided that the above copyright notice and this permission notice appear in all copies.

THE SOFTWARE IS PROVIDED "AS IS" AND TODD C. MILLER DISCLAIMS ALL WARRANTIES WITH REGARD TO THIS SOFTWARE INCLUDING ALL IMPLIED WARRANTIES OF MERCHANTABILITY AND FITNESS. IN NO EVENT SHALL TODD C. MILLER BE LIABLE FOR ANY SPECIAL, DIRECT, INDIRECT, OR CONSEQUENTIAL DAMAGES OR ANY DAMAGES WHATSOEVER RESULTING FROM LOSS OF USE, DATA OR PROFITS, WHETHER IN AN ACTION OF CONTRACT, NEGLIGENCE OR OTHER TORTIOUS ACTION, ARISING OUT OF OR IN CONNECTION WITH THE USE OR PERFORMANCE OF THIS SOFTWARE.

Some code is licensed under a MIT-style license to the following copyright holders:

Free Software Foundation, Inc.

Permission is hereby granted, free of charge, to any person obtaining a copy of this software and associated documentation files (the "Software"), to deal in the Software without restriction, including without limitation the rights to use, copy, modify, merge, publish, distribute, distribute with modifications, sublicense, and/or sell copies of the Software, and to permit persons to whom the Software is furnished to do so, subject to the following conditions:
The above copyright notice and this permission notice shall be included in all copies or substantial portions of the Software.

THE SOFTWARE IS PROVIDED "AS IS", WITHOUT WARRANTY OF ANY KIND, EXPRESS OR IMPLIED, INCLUDING BUT NOT LIMITED TO THE WARRANTIES OF MERCHANTABILITY, FITNESS FOR A PARTICULAR PURPOSE AND NONINFRINGEMENT. IN NO EVENT SHALL THE ABOVE COPYRIGHT HOLDERS BE LIABLE FOR ANY CLAIM, DAMAGES OR OTHER LIABILITY, WHETHER IN AN ACTION OF CONTRACT, TORT OR OTHERWISE, ARISING FROM, OUT OF OR IN CONNECTION WITH THE SOFTWARE OR THE USE OR OTHER DEALINGS IN THE SOFTWARE.

Except as contained in this notice, the name(s) of the above copyright holders shall not be used in advertising or otherwise to promote the sale, use or other dealings in this Software without prior written authorization.

C.10 openssl

OpenSSL License

Copyright (c) 1998-2011 The OpenSSL Project. All rights reserved.

Redistribution and use in source and binary forms, with or without modification, are permitted provided that the following conditions are met:

1. Redistributions of source code must retain the above copyright notice, this list of conditions and the following disclaimer.

2. Redistributions in binary form must reproduce the above copyright notice, this list of conditions and the following disclaimer in the documentation and/or other materials provided with the distribution.

3. All advertising materials mentioning features or use of this software must display the following acknowledgment:
"This product includes software developed by the OpenSSL Project for use in the OpenSSL Toolkit. (http://www.openssl.org/)"

4. The names "OpenSSL Toolkit" and "OpenSSL Project" must not be used to endorse or promote products derived from this software without prior written permission. For written permission, please contact openssl-core@openssl.org.

5. Products derived from this software may not be called "OpenSSL" nor may "OpenSSL" appear in their names without prior written permission of the OpenSSL Project.

6. Redistributions of any form whatsoever must retain the following acknowledgment:
"This product includes software developed by the OpenSSL Project for use in the OpenSSL Toolkit (http://www.openssl.org/)"

THIS SOFTWARE IS PROVIDED BY THE OpenSSL PROJECT ``AS IS'' AND ANY EXPRESSED OR IMPLIED WARRANTIES, INCLUDING, BUT NOT LIMITED TO, THE IMPLIED WARRANTIES OF MERCHANTABILITY AND FITNESS FOR A PARTICULAR PURPOSE ARE DISCLAIMED. IN NO EVENT SHALL THE OpenSSL PROJECT OR ITS CONTRIBUTORS BE LIABLE FOR ANY DIRECT, INDIRECT, INCIDENTAL, SPECIAL, EXEMPLARY, OR CONSEQUENTIAL DAMAGES (INCLUDING, BUT NOT LIMITED TO, PROCUREMENT OF SUBSTITUTE GOODS OR SERVICES; LOSS OF USE, DATA, OR PROFITS; OR BUSINESS INTERRUPTION) HOWEVER CAUSED AND ON ANY THEORY OF LIABILITY, WHETHER IN CONTRACT, STRICT LIABILITY, OR TORT (INCLUDING NEGLIGENCE OR OTHERWISE) ARISING IN ANY WAY OUT OF THE USE OF THIS SOFTWARE, EVEN IF ADVISED OF THE POSSIBILITY OF SUCH DAMAGE.

This product includes cryptographic software written by Eric Young (eay@cryptsoft.com). This product includes software written by Tim Hudson (tjh@cryptsoft.com).

Original SSLeay License

Copyright (C) 1995-1998 Eric Young (eay@cryptsoft.com)
All rights reserved.

This package is an SSL implementation written by Eric Young (eay@cryptsoft.com).
The implementation was written so as to conform with Netscapes SSL.

This library is free for commercial and non-commercial use as long as the following conditions are aheared to. The following conditions apply to all code found in this distribution, be it the RC4, RSA, lhash, DES, etc., code; not just the SSL code. The SSL documentation included with this distribution is covered by the same copyright terms except that the holder is Tim Hudson (tjh@cryptsoft.com).

Copyright remains Eric Young's, and as such any Copyright notices in
the code are not to be removed.
If this package is used in a product, Eric Young should be given attribution
as the author of the parts of the library used.
This can be in the form of a textual message at program startup or
in documentation (online or textual) provided with the package.

Redistribution and use in source and binary forms, with or without
modification, are permitted provided that the following conditions
are met:
1. Redistributions of source code must retain the copyright
notice, this list of conditions and the following disclaimer.
2. Redistributions in binary form must reproduce the above copyright
notice, this list of conditions and the following disclaimer in the
documentation and/or other materials provided with the distribution.
3. All advertising materials mentioning features or use of this software
must display the following acknowledgement:
"This product includes cryptographic software written by
Eric Young (eay@cryptsoft.com)"
The word 'cryptographic' can be left out if the rouines from the library
being used are not cryptographic related :-).
4. If you include any Windows specific code (or a derivative thereof) from
the apps directory (application code) you must include an acknowledgement:
"This product includes software written by Tim Hudson (tjh@cryptsoft.com)"

THIS SOFTWARE IS PROVIDED BY ERIC YOUNG ``AS IS'' AND
ANY EXPRESS OR IMPLIED WARRANTIES, INCLUDING, BUT NOT LIMITED TO, THE
IMPLIED WARRANTIES OF MERCHANTABILITY AND FITNESS FOR A PARTICULAR PURPOSE
ARE DISCLAIMED. IN NO EVENT SHALL THE AUTHOR OR CONTRIBUTORS BE LIABLE
FOR ANY DIRECT, INDIRECT, INCIDENTAL, SPECIAL, EXEMPLARY, OR CONSEQUENTIAL
DAMAGES (INCLUDING, BUT NOT LIMITED TO, PROCUREMENT OF SUBSTITUTE GOODS
OR SERVICES; LOSS OF USE, DATA, OR PROFITS; OR BUSINESS INTERRUPTION)
HOWEVER CAUSED AND ON ANY THEORY OF LIABILITY, WHETHER IN CONTRACT, STRICT
LIABILITY, OR TORT (INCLUDING NEGLIGENCE OR OTHERWISE) ARISING IN ANY WAY
OUT OF THE USE OF THIS SOFTWARE, EVEN IF ADVISED OF THE POSSIBILITY OF
SUCH DAMAGE.

The licence and distribution terms for any publically available version or
derivative of this code cannot be changed. i.e. this code cannot simply be
copied and put under another distribution licence
[including the GNU Public Licence.]

C.11 zlib

Copyright (C) 1995-2013 Jean-loup Gailly and Mark Adler

This software is provided 'as-is', without any express or implied warranty. In no event will the authors be held liable for any damages arising from the use of this software.

Permission is granted to anyone to use this software for any purpose, including commercial applications, and to alter it and redistribute it freely, subject to the following restrictions:

1. The origin of this software must not be misrepresented; you must not claim that you wrote the original software. If you use this software in a product, an acknowledgment in the product documentation would be appreciated but is not required.
2. Altered source versions must be plainly marked as such, and must not be misrepresented as being the original software.
3. This notice may not be removed or altered from any source distribution.

Jean-loup Gailly Mark Adler

jloup@gzip.org madler@alumni.caltech.edu

C.12 radiusclient-ng

Copyright (c) 1998 The NetBSD Foundation, Inc.
All rights reserved.

This code is derived from software contributed to The NetBSD Foundation
by Christos Zoulas.

Redistribution and use in source and binary forms, with or without
modification, are permitted provided that the following conditions
are met:
1. Redistributions of source code must retain the above copyright
notice, this list of conditions and the following disclaimer.
2. Redistributions in binary form must reproduce the above copyright
notice, this list of conditions and the following disclaimer in the
documentation and/or other materials provided with the distribution.
3. All advertising materials mentioning features or use of this software
must display the following acknowledgement:
This product includes software developed by the NetBSD
Foundation, Inc. and its contributors.
4. Neither the name of The NetBSD Foundation nor the names of its
contributors may be used to endorse or promote products derived
from this software without specific prior written permission.

THIS SOFTWARE IS PROVIDED BY THE NETBSD FOUNDATION, INC. AND CONTRIBUTORS
``AS IS'' AND ANY EXPRESS OR IMPLIED WARRANTIES, INCLUDING, BUT NOT LIMITED
TO, THE IMPLIED WARRANTIES OF MERCHANTABILITY AND FITNESS FOR A PARTICULAR
PURPOSE ARE DISCLAIMED. IN NO EVENT SHALL THE FOUNDATION OR CONTRIBUTORS
BE LIABLE FOR ANY DIRECT, INDIRECT, INCIDENTAL, SPECIAL, EXEMPLARY, OR
CONSEQUENTIAL DAMAGES (INCLUDING, BUT NOT LIMITED TO, PROCUREMENT OF
SUBSTITUTE GOODS OR SERVICES; LOSS OF USE, DATA, OR PROFITS; OR BUSINESS
INTERRUPTION) HOWEVER CAUSED AND ON ANY THEORY OF LIABILITY, WHETHER IN
CONTRACT, STRICT LIABILITY, OR TORT (INCLUDING NEGLIGENCE OR OTHERWISE)
ARISING IN ANY WAY OUT OF THE USE OF THIS SOFTWARE, EVEN IF ADVISED OF THE
POSSIBILITY OF SUCH DAMAGE.

Copyright (c) 2003 Maxim Sobolev <sobomax@FreeBSD.org>
All rights reserved.

Redistribution and use in source and binary forms, with or without
modification, are permitted provided that the following conditions
are met:
1. Redistributions of source code must retain the above copyright
notice, this list of conditions and the following disclaimer.
2. Redistributions in binary form must reproduce the above copyright
notice, this list of conditions and the following disclaimer in the
documentation and/or other materials provided with the distribution.

THIS SOFTWARE IS PROVIDED BY THE AUTHOR AND CONTRIBUTORS ``AS IS'' AND
ANY EXPRESS OR IMPLIED WARRANTIES, INCLUDING, BUT NOT LIMITED TO, THE
IMPLIED WARRANTIES OF MERCHANTABILITY AND FITNESS FOR A PARTICULAR PURPOSE
ARE DISCLAIMED. IN NO EVENT SHALL THE AUTHOR OR CONTRIBUTORS BE LIABLE
FOR ANY DIRECT, INDIRECT, INCIDENTAL, SPECIAL, EXEMPLARY, OR CONSEQUENTIAL
DAMAGES (INCLUDING, BUT NOT LIMITED TO, PROCUREMENT OF SUBSTITUTE GOODS
OR SERVICES; LOSS OF USE, DATA, OR PROFITS; OR BUSINESS INTERRUPTION)
HOWEVER CAUSED AND ON ANY THEORY OF LIABILITY, WHETHER IN CONTRACT, STRICT
LIABILITY, OR TORT (INCLUDING NEGLIGENCE OR OTHERWISE) ARISING IN ANY WAY
OUT OF THE USE OF THIS SOFTWARE, EVEN IF ADVISED OF THE POSSIBILITY OF
SUCH DAMAGE.

Copyright (C) 1995,1996,1997,1998 Lars Fenneberg <lf@elemental.net>

Permission to use, copy, modify, and distribute this software for any
purpose and without fee is hereby granted, provided that this copyright and
permission notice appear on all copies and supporting documentation, the
name of Lars Fenneberg not be used in advertising or publicity pertaining to
distribution of the program without specific prior permission, and notice be
given in supporting documentation that copying and distribution is by

permission of Lars Fenneberg.

Lars Fenneberg makes no representations about the suitability of this software for any purpose. It is provided "as is" without express or implied warranty.

Copyright 1992 Livingston Enterprises, Inc.
Livingston Enterprises, Inc. 6920 Koll Center Parkway Pleasanton, CA 94566

Permission to use, copy, modify, and distribute this software for any purpose and without fee is hereby granted, provided that this copyright and permission notice appear on all copies and supporting documentation, the name of Livingston Enterprises, Inc. not be used in advertising or publicity pertaining to distribution of the program without specific prior permission, and notice be given in supporting documentation that copying and distribution is by permission of Livingston Enterprises, Inc.

Livingston Enterprises, Inc. makes no representations about the suitability of this software for any purpose. It is provided "as is" without express or implied warranty.

[C] The Regents of the University of Michigan and Merit Network, Inc. 1992, 1993, 1994, 1995 All Rights Reserved

Permission to use, copy, modify, and distribute this software and its documentation for any purpose and without fee is hereby granted, provided that the above copyright notice and this permission notice appear in all copies of the software and derivative works or modified versions thereof, and that both the copyright notice and this permission and disclaimer notice appear in supporting documentation.

THIS SOFTWARE IS PROVIDED "AS IS" WITHOUT WARRANTY OF ANY KIND, EITHER EXPRESS OR IMPLIED, INCLUDING WITHOUT LIMITATION WARRANTIES OF MERCHANTABILITY AND FITNESS FOR A PARTICULAR PURPOSE. THE REGENTS OF THE UNIVERSITY OF MICHIGAN AND MERIT NETWORK, INC. DO NOT WARRANT THAT THE FUNCTIONS CONTAINED IN THE SOFTWARE WILL MEET LICENSEE'S REQUIREMENTS OR THAT OPERATION WILL BE UNINTERRUPTED OR ERROR FREE. The Regents of the University of Michigan and Merit Network, Inc. shall not be liable for any special, indirect, incidental or consequential damages with respect to any claim by Licensee or any third party arising from use of the software.

Copyright (C) 1991-2, RSA Data Security, Inc. Created 1991.
All rights reserved.

License to copy and use this software is granted provided that it is identified as the "RSA Data Security, Inc. MD5 Message-Digest Algorithm" in all material mentioning or referencing this software or this function.

License is also granted to make and use derivative works provided that such works are identified as "derived from the RSA Data Security, Inc. MD5 Message-Digest Algorithm" in all material mentioning or referencing the derived work.

RSA Data Security, Inc. makes no representations concerning either the merchantability of this software or the suitability of this software for any particular purpose. It is provided "as is" without express or implied warranty of any kind.

These notices must be retained in any copies of any part of this documentation and/or software.

C.13 apache

Apache License
Version 2.0, January 2004
http://www.apache.org/licenses/

TERMS AND CONDITIONS FOR USE, REPRODUCTION, AND DISTRIBUTION

1. Definitions.

"License" shall mean the terms and conditions for use, reproduction, and distribution as defined by Sections 1 through 9 of this document.

"Licensor" shall mean the copyright owner or entity authorized by the copyright owner that is granting the License.

"Legal Entity" shall mean the union of the acting entity and all other entities that control, are controlled by, or are under common control with that entity. For the purposes of this definition, "control" means (i) the power, direct or indirect, to cause the direction or management of such entity, whether by contract or otherwise, or (ii) ownership of fifty percent (50%) or more of the outstanding shares, or (iii) beneficial ownership of such entity.

"You" (or "Your") shall mean an individual or Legal Entity exercising permissions granted by this License.

"Source" form shall mean the preferred form for making modifications, including but not limited to software source code, documentation source, and configuration files.

"Object" form shall mean any form resulting from mechanical transformation or translation of a Source form, including but not limited to compiled object code, generated documentation, and conversions to other media types.

"Work" shall mean the work of authorship, whether in Source or Object form, made available under the License, as indicated by a copyright notice that is included in or attached to the work (an example is provided in the Appendix below).

"Derivative Works" shall mean any work, whether in Source or Object form, that is based on (or derived from) the Work and for which the editorial revisions, annotations, elaborations, or other modifications represent, as a whole, an original work of authorship. For the purposes of this License, Derivative Works shall not include works that remain separable from, or merely link (or bind by name) to the interfaces of, the Work and Derivative Works thereof.

"Contribution" shall mean any work of authorship, including the original version of the Work and any modifications or additions to that Work or Derivative Works thereof, that is intentionally submitted to Licensor for inclusion in the Work by the copyright owner or by an individual or Legal Entity authorized to submit on behalf of the copyright owner. For the purposes of this definition, "submitted" means any form of electronic, verbal, or written communication sent to the Licensor or its representatives, including but not limited to communication on electronic mailing lists, source code control systems, and issue tracking systems that are managed by, or on behalf of, the Licensor for the purpose of discussing and improving the Work, but excluding communication that is conspicuously marked or otherwise designated in writing by the copyright owner as "Not a Contribution."

"Contributor" shall mean Licensor and any individual or Legal Entity on behalf of whom a Contribution has been received by Licensor and subsequently incorporated within the Work.

2. Grant of Copyright License. Subject to the terms and conditions of this License, each Contributor hereby grants to You a perpetual, worldwide, non-exclusive, no-charge, royalty-free, irrevocable copyright license to reproduce, prepare Derivative Works of, publicly display, publicly perform, sublicense, and distribute the

Work and such Derivative Works in Source or Object form.

3. Grant of Patent License. Subject to the terms and conditions of this License, each Contributor hereby grants to You a perpetual, worldwide, non-exclusive, no-charge, royalty-free, irrevocable (except as stated in this section) patent license to make, have made, use, offer to sell, sell, import, and otherwise transfer the Work, where such license applies only to those patent claims licensable by such Contributor that are necessarily infringed by their Contribution(s) alone or by combination of their Contribution(s) with the Work to which such Contribution(s) was submitted. If You institute patent litigation against any entity (including a cross-claim or counterclaim in a lawsuit) alleging that the Work or a Contribution incorporated within the Work constitutes direct or contributory patent infringement, then any patent licenses granted to You under this License for that Work shall terminate as of the date such litigation is filed.

4. Redistribution. You may reproduce and distribute copies of the Work or Derivative Works thereof in any medium, with or without modifications, and in Source or Object form, provided that You meet the following conditions:

(a) You must give any other recipients of the Work or Derivative Works a copy of this License; and

(b) You must cause any modified files to carry prominent notices stating that You changed the files; and

(c) You must retain, in the Source form of any Derivative Works that You distribute, all copyright, patent, trademark, and attribution notices from the Source form of the Work, excluding those notices that do not pertain to any part of the Derivative Works; and

(d) If the Work includes a "NOTICE" text file as part of its distribution, then any Derivative Works that You distribute must include a readable copy of the attribution notices contained within such NOTICE file, excluding those notices that do not pertain to any part of the Derivative Works, in at least one of the following places: within a NOTICE text file distributed as part of the Derivative Works; within the Source form or documentation, if provided along with the Derivative Works; or, within a display generated by the Derivative Works, if and wherever such third-party notices normally appear. The contents of the NOTICE file are for informational purposes only and do not modify the License. You may add Your own attribution notices within Derivative Works that You distribute, alongside or as an addendum to the NOTICE text from the Work, provided that such additional attribution notices cannot be construed as modifying the License.

You may add Your own copyright statement to Your modifications and may provide additional or different license terms and conditions for use, reproduction, or distribution of Your modifications, or for any such Derivative Works as a whole, provided Your use, reproduction, and distribution of the Work otherwise complies with the conditions stated in this License.

5. Submission of Contributions. Unless You explicitly state otherwise, any Contribution intentionally submitted for inclusion in the Work by You to the Licensor shall be under the terms and conditions of this License, without any additional terms or conditions. Notwithstanding the above, nothing herein shall supersede or modify the terms of any separate license agreement you may have executed with Licensor regarding such Contributions.

6. Trademarks. This License does not grant permission to use the trade names, trademarks, service marks, or product names of the Licensor, except as required for reasonable and customary use in describing the origin of the Work and reproducing the content of the NOTICE file.

7. Disclaimer of Warranty. Unless required by applicable law or agreed to in writing, Licensor provides the Work (and each

Contributor provides its Contributions) on an "AS IS" BASIS,
WITHOUT WARRANTIES OR CONDITIONS OF ANY KIND, either express or
implied, including, without limitation, any warranties or conditions
of TITLE, NON-INFRINGEMENT, MERCHANTABILITY, or FITNESS FOR A
PARTICULAR PURPOSE. You are solely responsible for determining the
appropriateness of using or redistributing the Work and assume any
risks associated with Your exercise of permissions under this License.

8. Limitation of Liability. In no event and under no legal theory,
whether in tort (including negligence), contract, or otherwise,
unless required by applicable law (such as deliberate and grossly
negligent acts) or agreed to in writing, shall any Contributor be
liable to You for damages, including any direct, indirect, special,
incidental, or consequential damages of any character arising as a
result of this License or out of the use or inability to use the
Work (including but not limited to damages for loss of goodwill,
work stoppage, computer failure or malfunction, or any and all
other commercial damages or losses), even if such Contributor
has been advised of the possibility of such damages.

9. Accepting Warranty or Additional Liability. While redistributing
the Work or Derivative Works thereof, You may choose to offer,
and charge a fee for, acceptance of support, warranty, indemnity,
or other liability obligations and/or rights consistent with this
License. However, in accepting such obligations, You may act only
on Your own behalf and on Your sole responsibility, not on behalf
of any other Contributor, and only if You agree to indemnify,
defend, and hold each Contributor harmless for any liability
incurred by, or claims asserted against, such Contributor by reason
of your accepting any such warranty or additional liability.
END OF TERMS AND CONDITIONS

C.14 json-c

Copyright (c) 2004, 2005 Metaparadigm Pte Ltd

Permission is hereby granted, free of charge, to any person obtaining a copy of this software and associated documentation files (the "Software"), to deal in the Software without restriction, including without limitation the rights to use, copy, modify, merge, publish, distribute, sublicense, and/or sell copies of the Software, and to permit persons to whom the Software is furnished to do so, subject to the following conditions:

The above copyright notice and this permission notice shall be included in all copies or substantial portions of the Software.

THE SOFTWARE IS PROVIDED "AS IS", WITHOUT WARRANTY OF ANY KIND, EXPRESS OR IMPLIED, INCLUDING BUT NOT LIMITED TO THE WARRANTIES OF MERCHANTABILITY, FITNESS FOR A PARTICULAR PURPOSE AND NONINFRINGEMENT. IN NO EVENT SHALL THE AUTHORS OR COPYRIGHT HOLDERS BE LIABLE FOR ANY CLAIM, DAMAGES OR OTHER LIABILITY, WHETHER IN AN ACTION OF CONTRACT, TORT OR OTHERWISE, ARISING FROM, OUT OF OR IN CONNECTION WITH THE SOFTWARE OR THE USE OR OTHER DEALINGS IN THE SOFTWARE.

(Blank page)