Anritsu Advancing beyond

Network Master™ Series

Network Master Pro MT1040A

400G (QSFP-DD) Multirate Module MU104014B
400G (OSFP) Multirate Module MU104015A
100G Multirate Module MU104011A

Network Master Pro

Network Master Pro MT1040A Overview

Redefining Transport Testing

Key I&M Merits, Including Future Expandability and High Operation Efficiency

The Network Master Pro MT1040A for 400G networks is a handheld portable instrument for evaluating the communications quality of various networks operating at speeds between 10 Mbps and 400 Gbps.
400G Ethernet uses Forward Error Correction (FEC), which requires FEC evaluation. With a built-in FEC analysis function for 400G Ethernet, the MT1040A is ideal for quality evaluation of QSFP-DD and OSFP optical modules and devices, as well as for network performance evaluation.

- One unit supports all transport-network field tests
- Easy-to-use portable semi-B5 size case with easy-to-read 9-inch touch screen
- Measurement automation-support tools for efficient one-button execution of difficult tests
- For evaluating both 400 GbE dual-port and 100 GbE 4-port equipment*1
- Supports 100ZR, 400ZR and OpenZR+ (Also supports OpenROADM QSFP-DD)
- WLAN*2/*Bluetooth*®*3/LAN connectivity

*1: Requires MT1040A-020 and two MU104014B modules or two MU104011A modules.
*2: WLAN is available for certified countries and regions including USA, Japan and EU countries. Please visit the Anritsu web site for updated information.
*3: The Bluetooth® mark and logs are owned by Bluetooth SIG, Inc. and are used by Anritsu under license.

Panel Overview

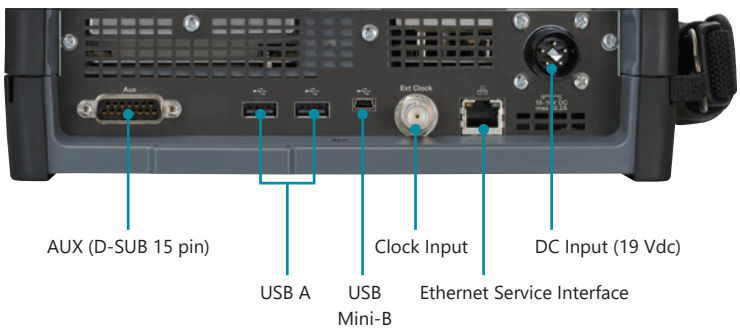

MT1040A + MU104014B

MT1040A + MU104014B + MU104014B

Network Master Pro MT1040A Mainframe Specifications

User Interfaces	
Display	9-inch active TFT display (800 × 480 pixels) and touch screen
Supported Languages	English, Chinese, Japanese, French, Russian, Spanish, Finnish, Korean, German

Service Interfaces	
USB Data Interface	MT1040A operates as host: USB 2.0 type A (2 Ports) MT1040A operates as device: USB 2.0 type Mini-B (1 port)
Ethernet Interface	Ethernet 10M/100M/1000M, RJ45 Connector: 1 port
WLAN Interface*	IEEE802.11a/b/g/n (2.4 GHz/5 GHz)
Bluetooth® Interface	Bluetooth 2.1 +EDR

*: Available for certified countries and regions including USA, Japan and EU countries. Please visit the Anritsu web site for updated information.

Other Interfaces	
AUX Connector	For connection of G0325A GPS receiver
Internal Clock	Accuracy: ±4.6 ppm or less, STRATUM3 compliant
Ext. Clock Input	For connection of external clock signals: SETS (E1: 2.048 Mbps), BITS (DS1: 1.544 Mbps) or 2.048 MHz TTL signal in accordance with ITU-T G.703, 10 MHz Connector: BNC (50Ω)

Miscellaneous			
Storage Capacity		7 Gbyte	
Battery		11.25 V rechargeable and replaceable intelligent Li-ion battery × 2 Operating time: 1 hours (typ., in case of 400 GbE) Charging time: 9 hours (Max.) (2 pcs) Remaining capacity indication: %	
Mains Adapter		G0418A (MT1040A Standard Accessory)	G0419A (MT1040A-020 Accessory)
		Input: 110 VAC to 240 VAC, 50 Hz/60 Hz Rated output: 19 VDC, 13.2 A max. Power consumption: 250 W max.	Input: 110 VAC to 240 VAC, 50 Hz/60 Hz Rated output 18 VDC, 22.2 A max. Power consumption: 420 W max.
Dimensions and Mass		262 (W) × 167 (H) × 68 (D) mm (Exclude Projection, MT1040A) 262 (W) × 167 (H) × 134 (D) mm (Exclude Projection, MT1040A + MU104014B) 262 (W) × 167 (H) × 154 (D) mm (Exclude Projection, MT1040A + MU104014B + MU100020A) 262 (W) × 167 (H) × 187 (D) mm (Exclude Projection, MT1040A + MU104014B + MU104014B) ≤4.7 kg (including MT1040A, MU104014B and battery) ≤5.5 kg (including MT1040A, MU104014B, MU100020A and battery) ≤6.5 kg (including MT1040A, MU104014B, MU104014B and battery)	
Environmental		Operating Temperature: 0°C to +50°C, Humidity: ≤85% RH (non-condensing) Charging Temperature: 0°C to +40°C, Humidity: ≤85% RH (non-condensing) Storage Temperature: –30°C to +60°C, Humidity: ≤90% RH (non-condensing, without battery and AC adapter) –20°C to +40°C, Humidity: ≤90% RH (non-condensing, with battery and AC adapter)	
CE	EMC	2014/30/EU, EN61326-1, EN61000-3-2	
	LVD	2014/35/EU, EN61010-1	
	RoHS	2011/65/EU, (EU) 2015/863, EN IEC 63000: 2018	
UKCA	EMC	S.I. 2016 No.1091, EN 61326-1, EN61000-3-2	
	LVD	S.I. 2016 No.1101, EN 61010-1	
	RoHS	S.I. 2012 No.3032, EN IEC 63000: 2018	

400G (QSFP-DD) Multirate Module MU104014B Specifications

Test Interface	
Test Port	QSFP-DD/QSFP56/QSFP28/QSFP+: 1 slot QSFP-DD Hardware Specification for QSFP Double Density 8X Pluggable Transceiver – Rev 4.0 compliant QSFP-DD Common Management Interface Specification – Rev 5.0 compliant SFF-8436, SFF-8636, SFF-8665 compliant, IEEE 802 .3 ba-2010 compliant, OIF-CEI-56G-VSR compliant, OIF-C-CMIS-01.1 compliant QSFP28/QSFP+: 1 slot SFF-8436, SFF-8636, SFF-8665 compliant, IEEE 802.3ba-2010 compliant SFP28/SFP+/SFP: 2 slot SFF-8402, SFF-8431, SFF-8472 compliant, IEEE 802.3ae-2002, IEEE 802.3-2008, IEEE 802.3by compliant RJ45: 2 sockets IEEE802.3-2008 10BASE-T, 100BASE-TX, 1000BASE-T compliant Auto MDI-X 10 Mbps/100 Mbps Full/Half Duplex, 1000 Mbps Full Duplex
Bit Rate*1	

Standard	Bit Rate	Interfaces
10BASE-T	12.5 Mbit/s	RJ45
100BASE-TX	125 Mbit/s	RJ45
1000BASE-T	1.25 Gbit/s	RJ45
100BASE-X	125 Mbit/s	SFP
1000BASE-X	1.25 Gbit/s	SFP
10GBASE-X	10.3125 Gbit/s	SFP+ (Electrical, Optics)
25GBASE-XX	25.781250000 Gbit/s × 1 Lane	SFP28
40GBASE-XX4	10.312500000 Gbit/s × 4 Lane	QSFP+
100GBASE-XX4	25.781250000 Gbit/s × 4 Lane	QSFP28
200GBASE-XX4	53.125000000 Gbit/s × 4 Lane (26.5625 Gbd PAM4 × 4 Lane)	QSFP56
400GBASE-XX4	53.125000000 Gbit/s × 8 Lane (26.5625 GBd PAM4 × 8 Lane)	QSFP-DD
OTU1	2.666057143 Gbit/s	SFP
OTU2	10.709225319 Gbit/s	SFP+
OTU1e	11.049 107143Gbit/s	SFP+
OTU2e	11.095727848 Gbit/s	SFP+
OTU1f	11.270089286 Gbit/s	SFP+
OTU2f	11.317642405 Gbit/s	SFP+
OTU3e1	11.142743644 Gbit/s × 4 Lane	SFP+
OTU3e2	11.145838894 Gbit/s × 4 Lane	SFP+
OTU3	10.754603390 Gbit/s × 4 Lane	QSFP+
OTU4	27.952493392 Gbit/s × 4 Lane	QSFP28

Standard	Bit Rate	Interfaces
STM-1/OC-3	155.52 Mbit/s	SFP
STM-4/OC-12	622.08 Mbit/s	SFP
STM-16/OC-48	2488.32 Mbit/s	SFP
STM-64/OC-192	9953.28 Mbit/s	SFP+
CPRI1	614.4 Mbit/s	SFP
CPRI2	1228.8 Mbit/s	SFP
CPRI3	2457.6 Mbit/s	SFP
CPRI4	3072.0 Mbit/s	SFP
CPRI5	4915.2 Mbit/s	SFP+
CPRI6	6144.0 Mbit/s	SFP+
CPRI7	9830.4 Mbit/s	SFP+
CPRI8	10137.6 Mbit/s	SFP+
CPRI9	12165.12 Mbit/s	SFP+
CPRI10	24330.24 Mbit/s	SFP28
OBSAI 1x	768 Mbit/s	SFP
OBSAI 2x	1536 Mbit/s	SFP
OBSAI 4x	3072 Mbit/s	SFP
OBSAI 8x	6144 Mbit/s	SFP+
1GFC	1.0625 Gbit/s	SFP
2GFC	2.125 Gbit/s	SFP
4GFC	4.25 Gbit/s	SFP
8GFC	8.5 Gbit/s	SFP
10GFC	10.51875 Gbit/s	SFP+
16GFC	14.025 Gbit/s	SFP+

Sync Clock Output (Port 1 only)	Frequency Select 1/8 or 1/16 against the bit rate of the one data lane. 400GBASE-XX4: Baudrate, 200GBASE-XX4: Baudrate, 100GBASE-XX4: CAUI4, 40GBASE-XX4: XLAUI, 25GBASE-XX: 25GAUI, OTU4: OTL 4.4, OTU3/OTU3 1/OTU3e2: OTL3.4 Level: 350 mVp-p (min.), 900 mVp-p (max.) Termination: 50Ω/AC (Single ended) Connector: SMA Female

Miscellaneous		
Dimensions and Mass		262 (W) × 164 (H) × 53 (D) mm (Exclude Projection) ≤2.0 kg (without optical modules)
Temperature and Humidity		Operating: 0°C to +40°C, ≤85% RH (non-condensing) Storage: –30°C to +60°C, ≤90% RH (non-condensing)
CE	EMC	2014/30/EU, EN61326-1, EN61000-3-2
	LVD	2014/35/EU, EN61010-1
	RoHS	2011/65/EU, (EU) 2015/863, EN INC 63000: 2018
UKCA	EMC	S.I. 2016 No.1091, EN 61326-1, EN61000-3-2
	LVD	S.I. 2016 No.1101, EN 61010-1
	RoHS	S.I. 2012 No.3032, EN IEC 63000: 2018
Laser Safety*2		IEC 60825-1: 2014 CLASS 1 21CFR1040.10 and 1040.11*3

*1: The frequency accuracy depends on the accuracy of the MT1040A internal clock or the external clock of MT1040A.
Refer to the external interfaces in MT1040A specifications.
*2: Safety measures for laser products
This product complies with optical safety standards in 21CFR1040.10, 1040.11 and IEC 60825-1; the following descriptive labels are affixed to the product.
*3: Excludes deviations caused by conformance to Laser Notice No. 56 dated MAY 8, 2019.

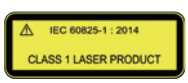

THIS PRODUCT COMPLIES WITH 21 CFR 1040.10 AND 1040.11 EXCEPT FOR DAVIATIONS PURSUANT TO LASER NOTICE NO. 56 DATED MAY 8, 2019

400G (QSFP-DD) Multirate Module MU104014B

400G (OSFP) Multirate Module MU104015A Specifications

Test Interface	
Test Port	OSFP: 1 slot Rev2.0: Specification for OSFP Octal Small Form Factor Plugable Module compliant OIF-CEI-56G-VSR compliant QSFP28/QSFP+: 1 slot SFF-8436, SFF-8636, SFF-8665 compliant, IEEE 802.3ba-2010 compliant SFP28/SFP+/SFP: 2 slot SFF-8402, SFF-8431, SFF-8472 compliant, IEEE 802.3ae-2002, IEEE 802.3-2008, IEEE 802.3by compliant RJ45: 2 sockets IEEE 802.3-2008 10BASE-T, 100BASE-TX, 1000BASE-T compliant Auto MDI-X 10 Mbps/100 Mbps Full/Half duplex, 1000 Mbps Full duplex
Bit Rate*2	

Standard	Bit Rate	Interfaces
10BASE-T	12.5 Mbps	RJ45
100BASE-TX	125.0 Mbps	RJ45
1000BASE-T	1.25 Gbps	RJ45
100BASE-XX	125.0 Mbps	SFP
1000BASE-XX	1.25 Gbps	SFP
10GBASE-XX	10.31250 Gbps	SFP+ (Electronic, Optics)
25GBASE-XX	25.78125 Gbps	SFP28
40GBASE-XX4	10.31250 Gbps × 4 Lane	QSFP+
100GBASE-XX4	25.78125 Gbps × 4 Lane	QSFP28
400GBASE-XX4	53.125000000 Gbit/s × 8 lane (26.5625 GBd PAM4 × 8 Lane)	OSFP
OTU1	2.666057143 Gbps	SFP
OTU2	10.70922532 Gbps	SFP+
OTU1e	11.04910714 Gbps	SFP+
OTU2e	11.09572785 Gbps	SFP+
OTU1f	11.27008929 Gbps	SFP+
OTU2f	11.31764241 Gbps	SFP+
OTU3	10.75460339 Gbps × 4 Lane	QSFP+
OTU3e1	11.14274364 Gbps × 4 Lane	QSFP+
OTU3e2	11.14583889 Gbps × 4 Lane	QSFP+
OTU4	27.95249339 Gbps × 4 Lane	QSFP28

Standard	Bit Rate	Interfaces
STM-1/OC-3	155.52 Mbps	SFP
STM-4/OC-12	622.08 Mbps	SFP
STM-16/OC-48	2.48832 Gbps	SFP
STM-64/OC-192	9.95328 Gbps	SFP+
1GFC	1.0625 Gbps	SFP
2GFC	2.125 Gbps	SFP
4GFC	4.25 Gbps	SFP
8GFC	8.5 Gbps	SFP
10GFC	10.51875 Gbps	SFP+
16GFC	14.025 Gbps	SFP+
CPRI1	614.4 Mbps	SFP
CPRI2	1228.8 Mbps	SFP
CPRI3	2457.6 Mbps	SFP
CPRI4	3072.0 Mbps	SFP
CPRI5	4915.2 Mbps	SFP+
CPRI6	6144.0 Mbps	SFP+
CPRI7	9830.4 Mbps	SFP+
CPRI8	10137.6 Mbps	SFP+
CPRI9	12165.12 Mbps	SFP+
CPRI10	24330.24 Mbps	SFP28
OBSAI 1x	768 Mbps	SFP
OBSAI 2x	1536 Mbps	SFP
OBSAI 4x	3,072 Mbps	SFP
OBSAI 8x	6,144 Mbps	SFP+

Sync Clock Output (Port 1 only)	Frequency Select 1/8 or 1/16 against the bit rate of the one data lane. 400GBASE-XX4: Baudrate, 25GBASE-XX: 25GAUI Level: 350 mVp-p (min.), 900 mVp-p (max.) Termination: 50Ω/AC (Single ended) Connector: SMA Female

Miscellaneous		
Dimensions and Mass		262 (W) × 164 (H) × 53 (D) mm (Exclude Projection) ≤2.0 kg (without optical modules)
Temperature and Humidity		Operating: 0°C to +40°C, ≤85% RH (non-condensing) Storage: –30°C to +60°C, ≤90% RH (non-condensing)
CE	EMC	2014/30/EU, EN61326-1, EN61000-3-2
	LVD	2014/35/EU, EN61010-1
	RoHS	2011/65/EU, (EU) 2015/863, EN INC 63000: 2018
UKCA	EMC	S.I. 2016 No.1091, EN 61326-1, EN61000-3-2
	LVD	S.I. 2016 No.1101, EN 61010-1
	RoHS	S.I. 2012 No.3032, EN IEC 63000: 2018
Laser Safety*2		IEC 60825-1: 2014 CLASS 1 21CFR1040.10 and 1040.11*3

*1: The frequency accuracy depends on the accuracy of the MT1040A internal clock or the external clock of MT1040A.
Refer to the external interfaces in MT1040A specifications.
*2: Safety measures for laser products
This product complies with optical safety standards in 21CFR1040.10, 1040.11 and IEC 60825-1; the following descriptive labels are affixed to the product.
*3: Excludes deviations caused by conformance to Laser Notice No. 56 dated MAY 8, 2019.

THIS PRODUCT COMPLIES WITH 21 CFR 1040.10 AND 1040.11 EXCEPT FOR DAVIATIONS PURSUANT TO LASER NOTICE NO. 56 DATED MAY 8, 2019

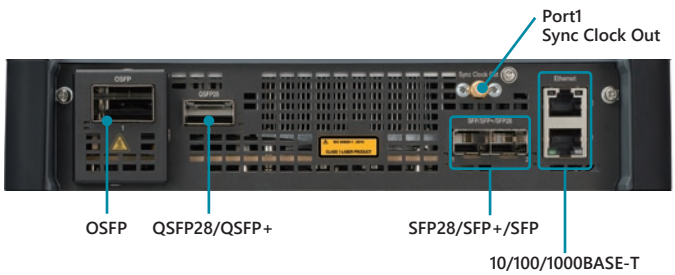

400G (OSFP) Multirate Module MU104015A

100G Multirate Module MU104011A Specifications

Test Interface	
Test Port	QSFP28/QSFP+: 2 slot SFF-8436, SFF-8636, SFF-8665 compliant, IEEE 802.3ba-2010 compliant SFP28/SFP+/SFP: 2 slot SFF-8402, SFF-8431, SFF-8472 compliant, IEEE 802.3ae-2002, IEEE 802.3-2008, IEEE 802.3by compliant RJ45: 2 sockets IEEE 802.3-2008 10BASE-T, 100BASE-TX, 1000BASE-T compliant Auto MDI-X 10 Mbps/100 Mbps Full/Half duplex, 1000 Mbps Full duplex
Bit Rate*1	

Standard	Bit Rate	Interfaces
10BASE-T	12.5 Mbps	RJ45
100BASE-TX	125 Mbps	RJ45
1000BASE-T	1.25 Gbps	RJ45
100BASE-XX	125 Mbps	SFP
1000BASE-XX	1.25 Gbps	SFP
10GBASE-XX	10.3125 Gbps	SFP+ (Electronic, Optics)
25GBASE-XX	25.78125 Gbps	SFP28
40GBASE-XX4	10.31250 Gbps × 4 Lane	QSFP+
100GBASE-XX4	25.78125 Gbps × 4 Lane	QSFP28
OTU1	2.666057143 Gbps	SFP
OTU2	10.70922532 Gbps	SFP+
OTU1e	11.04910714 Gbps	SFP+
OTU2e	11.09572785 Gbps	SFP+
OTU1f	11.27008929 Gbps	SFP+
OTU2f	11.31764241 Gbps	SFP+
OTU3	10.75460339 Gbps × 4 Lane	QSFP+
OTU3e1	11.14274364 Gbps × 4 Lane	QSFP+
OTU3e2	11.14583889 Gbps × 4 Lane	QSFP+
OTU4	27.95249339 Gbps × 4 Lane	QSFP28
STM-1/OC-3	155.52 Mbps	SFP
STM-4/OC-12	622.08 Mbps	SFP

Standard	Bit Rate	Interfaces
STM-16/OC-48	2.48832 Mbps	SFP
STM-64/OC-192	9.95328 Mbps	SFP+
1GFC	1.0625 Gbps	SFP
2GFC	2.125 Gbps	SFP
4GFC	4.25 Gbps	SFP
8GFC	8.5 Gbps	SFP+
10GFC	10.51875 Gbps	SFP+
16GFC	14.025 Gbps	SFP+
CPRI1	614.4 Mbps	SFP
CPRI2	1228.8 Mbps	SFP
CPRI3	2457.6 Mbps	SFP
CPRI4	3072.0 Mbps	SFP
CPRI5	4915.2 Mbps	SFP+
CPRI6	6144.0 Mbps	SFP+
CPRI7	9830.4 Mbps	SFP+
CPRI8	10137.6 Mbps	SFP+
CPRI9	12165.12 Mbps	SFP+
CPRI10	24330.24 Mbps	SFP28
OBSAI 1x	768 Mbps	SFP
OBSAI 2x	1536 Mbit/s	SFP
OBSAI 4x	3072 Mbps	SFP
OBSAI 8x	6144 Mbps	SFP+

Sync Clock Output (Port 1 only)	Frequency Select 1/8 or 1/16 against the bit rate of the one data lane. 100GBASE-XX4: CAUI4, 40GBASE-XX4: XLAUI, 25GBASE-XX: 25GAUI, OTU4: OTL 4.4, OTU3/OTU3e1/OTU3e2: OTL3.4 Level: 350 mVp-p (min.), 900 mVp-p (max.) Termination: 50Ω/AC (Single ended) Connector: SMA Female

Miscellaneous		
Dimensions and Mass		262 (W) × 164 (H) × 53 (D) mm (Exclude Projection) ≤2.0 kg (without optical modules)
Temperature and Humidity		Operating: 0°C to +40°C, ≤85% RH (non-condensing) Storage: −30°C to +60°C, ≤90% RH (non-condensing)
CE	EMC	2014/30/EU, EN61326-1, EN61000-3-2
	LVD	2014/35/EU, EN61010-1
	RoHS	2011/65/EU, (EU) 2015/863, EN INC 63000: 2018
UKCA	EMC	S.I. 2016 No.1091, EN 61326-1, EN61000-3-2
	LVD	S.I. 2016 No.1101, EN 61010-1
	RoHS	S.I. 2012 No.3032, EN IEC 63000: 2018
Laser Safety*2		IEC 60825-1: 2014 CLASS 1 21CFR1040.10 and 1040.11*3

*1: The frequency accuracy depends on the accuracy of the MT1040A internal clock or the external clock of MT1040A.
Refer to the external interfaces in MT1040A specifications.

*2: Safety measures for laser products
This product complies with optical safety standards in 21CFR1040.10, 1040.11 and IEC 60825-1; the following descriptive labels are affixed to the product.

*3: Excludes deviations caused by conformance to Laser Notice No. 56 dated MAY 8, 2019.

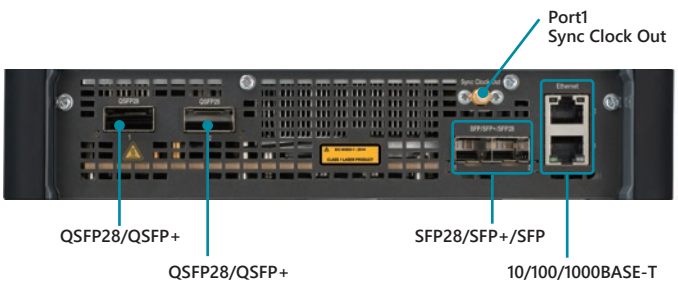

100G Multirate Module MU104011A

Ethernet Testing Specifications

Test Interface			
Model	MU104014B	MU104015A	MU104011A
Bit Rate Option	MU104014B-012 (Up to 25G) MU104014B-013/014 (40G) MU104014B-015/016 (100G) MU104014B-031 (200G) MU104014B-033 (400G) MU104014B-034 4×100G N Port BERT MU104014B-036 OpenZR+ Multi client BERT	MU104015A-012 (Up to 25G) MU104015A-013 (40G) MU104015A-015 (100G) MU104015A-033 (400G) MU104015A-035 2×200G N Port BERT	MU104011A-012 (Up to 25G) MU104011A-013/014 (40G) MU104011A-015/016 (100G)
Application Option	MU104014B-006 (100G Pluggable Coherent) MU104014B-020 (TCP Throughput)	MU104015A-006 (100G Pluggable Coherent) MU104015A-020 (TCP Throughput)	MU104011A-006 (100G Pluggable Coherent) MU104011A-020 (TCP Throughput)
Bit Rate	10 Mbps (RJ45), 100 Mbps (RJ45/SFP), 1 Gbps (RJ45/SFP), 10 Gbps (RJ45/SFP+), 25 Gbps (SFP28), 40 Gbps (QSFP+), 100 Gbps (QSFP28), 200 Gbps (QSFP56), 400 Gbps (QSFP-DD), 100 Gbps×4 (QSFP-DD), 100 Gbps×2 (QSFP-DD), 100 Gbps×1 (QSFP-DD)	10 Mbps (RJ45), 100 Mbps (RJ45/SFP), 1 Gbps (RJ45/SFP), 10 Gbps (RJ45/SFP+), 25 Gbps (SFP28), 40 Gbps (QSFP+), 100 Gbps (QSFP28), 400 Gbps (OSFP), 200 Gbps×2 (OSFP)	10 Mbps (RJ45), 100 Mbps (RJ45/SFP), 1 Gbps (RJ45/SFP), 10 Gbps (RJ45/SFP+), 25 Gbps (SFP28), 40 Gbps (QSFP+), 100 Gbps (QSFP28)
Test Application	RFC 2544, RFC 6349, Y.1564, BERT, Monitor/Generator, Pass-through, Reflector, Channel Stat., Ping, Traceroute, Cable Test		
Auto MDI-X	On/Off		
Frame	Ether Type II (DIX v.2), IEEE 802.3 with 802.2 (LLC1)		Ether Type II (DIX v.2), IEEE 802.3 with 802.2 (LLC1), IEEE 802.3 with SNAP
100ZR Setting	• Tx power: dBm • Laser: On/Off • Frequency Setting: Grid, Channel/Frequency/Wavelength • APPSEL Custom Setting		
400ZR/OpenZR+ Setting	• Tx power: dBm • Laser: On/Off • Frequency Setting: Grid, Channel/Frequency/Wavelength • APPSEL Custom Setting • Mode Setting: 4×100G, 2×100G, 3×100G, 1×100G (with MU104014B-036)	—	
400 GbE/200 GbE FEC	FEC: On Fix FEC Code: RS (544, 514, 15, 10) FEC status & counter Loss of FEC alignment, Corrected CW, Uncorrectable CW, FEC Symbol error (Per lane) FEC Error Injection Bit error per PAM4 encoded FEC (Timing: Single, Burst) FEC Symbol error (CW) Distribution Corrected Symbol Error (Graph, Table)		—
100 GbE, 25 GbE FEC	FEC enable : On/Off FEC Code: RS (528, 514, 7, 10), RS (554, 514) FEC status & counter Loss of FEC alignment, Corrected CW, Uncorrectable CW, FEC Symbol error (Per lane) FEC related Error Injection Bit error per CAUI4 lane or 25G CAUI encoded RS-FEC (Timing: Single, Burst) FEC distribution Corrected Symbol Error (Table, Graph Display)		

Ethernet Testing Specifications

Configuration, Monitor/Generate			
Model	MU104014B	MU104015A	MU104011A
Traffic Generation	400 Gbps/200 Gbps • Frame Size: Constant, Random • IPv4 identifier: Fixed • Test Pattern: PRBS31, User 32 bit pattern • MAC Address: Fixed/Random • IP Destination Address: Fixed/Random • IP Source Address: Fixed/Random	200 Gbps • Frame Size: Constant, Random • IPv4 identifier: Fixed • Test Pattern: PRBS31, User 32 bit pattern • MAC Address: Fixed/Random • IP Destination Address: Fixed/Random • IP Source Address: Fixed/Random	—
	4×100 Gbps • Frame Size: Constant, Random • IPv4 identifier: Fixed • Test Pattern: PRBS31 • MAC Address: Fixed • IP Destination Address: Fixed • IP Source Address: Fixed	2×100 Gbps • Frame Size: Constant, Random • IPv4 identifier: Fixed • Test Pattern: PRBS31 • MAC Address: Fixed • IP Destination Address: Fixed • IP Source Address: Fixed	—
	Up to 100G • Transmitting mode: Normal, Burst • Frame Size: Constant, Step, Random • IPv4 identifier: Fixed, incremented • Test Pattern: PRBS9/11/15/20/23/29/31, Cross pattern • MAC Address: Fixed, Increment, Decrement, Random • IP Destination Address: Fixed, Increment, Decrement, Random, DNS(IPv4) • IP Source Address: Fixed, Increment, Decrement, Random, DHCP(IPv4), NDP(IPv6) • IGMP: Join/Leave (Support version: IGMPv1, IGMPv2, IGMPv3) • MLD: Join/Leave (Support version: MLDv1, MLDv2)		
	Both • Variable line rate traffic generation, up to full line rate • Line load profile: Constant, Ramp • Traffic duration: Continuous, Programmable number of seconds or frames • Adjustable frame size: 60 bytes to 16000 bytes • Payload profiles: Data, Video, Voice • User-defined traffic mix of unicast and broadcast frames • User programmable DSCP/TOS byte • User programmable UDP/TCP address • Automatic TCP connect (user selectable) • UDP check sum: Automatic, Fixed (null); TCP check sum: Automatic • Generate pause frames, Respond to pause frames • Answer incoming ARP, Ping requests (On/Off) • Link Fault Signaling (LFS) Emulation (10 Gbps, 25 Gbps, 40 Gbps, 100 Gbps, 400 Gbps)		
Stacked VLAN	User-settable VLAN tags 400G/200G 2×100G/4×100G: Up to 4 Up to 100G: Up to 8 Parameters per VLAN tag: • Ether-type 0x8100 (802.1Q), 0x88a8 (802.1ad), 0x9100 or 0x9200 • User-defined VLAN ID, CFI, VLAN priority Only one VLAN level supported at traceroute and RFC 2544 router latency tests. Only two VLAN level supported at ping.		
Multistream	Number of streams: Up to 16 streams per port can be activated		
Latency Resolution	5 ns (10M/100M/1000M, 10G, 25G, 40G, 100G, 200G, 400G), 100 ns (10M/100M/1000M, 10G, 25G, 40G, 100G)		
Timing Source	Internal clock, Received clock, External clock (2-MHz signal, SETS (E1: 2.048 Mbps), BITS (DS1: 1.544 Mbps)), GPS receiver (with G0325A)		
Frequency Offset	±200 ppm, 0.1 ppm step		
Receive Setting	• User-defined expected preamble length: 3 bytes to 15 bytes • User-defined IFG lower threshold: 8 bytes to 15 bytes (RJ45 port only) • User-defined Jumbo frame size upper limit: 1519 bytes to 16000 bytes		
Error Generation	• LAN error IFG for Ethernet (RJ45 port only), FCS, Preamble, Error symbol/block, Wrong IP check sum, Fragmented IP, Wrong layer 4 check sum, PRBS bit error, BER test sequence error • PCS error 200G/400G: 66B error 40G, 100G: Invalid block type (0x00, 0x2d, 0x33, 0x66), Invalid sync header (00, 11), Invalid alignment marker, BIP error 10G, 25G: Invalid block type (0x00), Invalid sync header (00, 11), Invalid alignment marker, BIP error • FEC error 200G/400G: FEC Symbol error (each lane), Symbol error (CW), Invalid alignment marker 100G: FEC Symbol error (each lane) 25G: FEC Symbol error (each lane)		

Ethernet Testing Specifications

Alarm Generation	• No link • RS (10 Gbps, 40 Gbps, 100 Gbps, 200 Gbps, 400 Gbps): Remote fault, Local fault • PCS (10 Gbps, 40 Gbps, 100 Gbps): High BER • PCS (400 Gbps): LOA, High SER, Local degrade, Remote degrade
PCS Skew	40 Gbps, 100 Gbps, 200 Gbps, 400 Gbps • Insertion 400 Gbps Tx lane: 0 to 8000 bits 200 Gbps Tx lane: 0 to 8000 bits 100 Gbps Tx lane: 0 to 4224 bits 40 Gbps physical lane: 0 to 8448 bits • Detection Relative skew, Marker map

Result, Monitor/Generate	
Bit Rate	10 Mbps, 100 Mbps, 1 Gbps, 10 Gbps, 25 Gbps, 40 Gbps, 100 Gbps, 200 Gbps, 400 Gbps
Status	• Link status, Interface type, Jabber detected, Frames present, MPLS/EoMPLS/VLAN, Speed, Full or half duplex, Local clock (Electrical 1000 Mbps), LFS LF/RF (10 Gbps), Signal present, Bit rate of incoming Ethernet signal, Auto negotiation complete • Link partner abilities: Pause capable and Asymmetric pause request (not Ethernet 10 Gbps and more), Remote fault, Speed/Duplex • Indicators for Utilization, Throughput and Errored frames • Signal level indication for optical Ethernet interfaces • LFS local fault, LFS remote fault, High BER, LOA (10 Gbps, 25 Gbps, 40 Gbps, 100 Gbps, 400 Gbps) • Invalid sync header, Invalid alignment marker, BIP error, Invalid block (10 Gbps, 25 Gbps, 40 Gbps, 100 Gbps)
Resolution	User-defined resolution for statistical measurements: 1, 2, 5, 10, 15, 30 s, 1, 5, 10, 15, 30 min, 1, 2, 4, 6, 12 h Event log: Major measurement events incl. errors and alarms are logged with 1-second resolution.
Performance Statistics	• Utilization (Max./Min./Avg.), Throughput (Max./Min./Avg.), Frame rate (Max./Min./Avg.)
Frame Statistics	• Total frames, Total valid frames, Unicast/Multicast/Broadcast frames, Number of pause frames • Number of VLAN tagged frames, Max. number of VLAN layers detected, Last received VLAN ID, Last received VLAN priority • Number of MPLS frames and MPLS-TP frames. Max. number of MPLS layers detected. Last received MPLS Label, MPLS Priority and MPLS TTL. • Number of PBB frames. Last received B/I-tag ID and B/I-tag priority. • Total errored frames, Fragmented frames, Number of oversized and undersized (runts) frames, Number of FCS errored frames, Error symbol frames (not 10 Gbps)/Code violation frames (10 Gbps), Number of collisions (10 Mbps, 100 Mbps half duplex), Preamble violations, IFG violations (RJ45 port only), False carrier, LFS LF (local fault), LFS RF (remote fault)
Burst Statistics	• Total frames, Total valid frames, Number of burst, Total frames in bursts, Burst size (Max./Min./Avg.)
Frame Distribution Statistics	• Total valid/ frames, 64 to 127, 128 to 255, 256 to 511, 512 to 1023, 1024 to 1518 byte frames, Total number of jumbo frames • Frame size (Max./Min./Avg.)
Multistream Statistics	Available information per stream: • Frame loss count/rate, Throughput, Latency, Packet jitter, Frames and bytes received and transmitted
Transmit Statistics	Total frames, Total valid frames, Unicast/Multicast/Broadcast frames, FCS errors, Total errors 64 to 127, 128 to 255, 256 to 511, 512 to 1023, 1024 to 1518 byte frames, Total number of jumbo frames Total number of frames (Tx (own port) – Rx (selectable port))
PCS Statistics	LFS Local Fault (Detected/Received), LFS Remote Fault, LOBL, Invalid sync header (10G-100G), BIP error (25G-100G), High SER (200G/400G), High BER (10G-100G), Invalid Block (25G-100G), 64B/66B Code violation (200G/400G), Local degrade, Remote degrade
CSV Output	Output the results of each counter in Statistics and Total
Filter	200G/400G: Up to 4 filter conditions can be defined. Up to 100G: Up to 8 filter conditions can be defined. Each condition can be applied as filter: IP or MAC source address, IP or MAC destination address, Broadcast address, IEEE OUI value, Encapsulation type, VLAN ID and VLAN tag priority, MPLS, PBB source and destination MAC address, PBB B/I-tag, MPLS-TP source and destination MAC address, TPC/UDP source and destination port, User-defined pattern at defined offset
Adjustable Threshold	Utilization, Throughput, Errored frames, Collision rate, Unicast frames, Multicast frames, Broadcast frames, Pause frames, Fragmented frames, Undersized frames (runts), Oversized frames, FCS errored frames, IFG violations (RJ45 port only), Preamble violations, BER test pattern errors, Sequence errors, Diff.Tx-Rx, Symbol Error (25G/100G/200G/400G), CodeWord distribution (25G/100G/200G/400G)
DHCP	• Display source IPv4 address assigned by DHCP • Display current lease expire time • Display IPv4 addresses of primary and secondary DNS server when obtained by DHCP
NDP	• Apply and show source IPv6 address assigned by NDP

Ethernet Testing Specifications

BER Test, Service Disruption Measurement	
Bit Rate	10 Mbps, 100 Mbps, 1 Gbps, 10 Gbps, 25 Gbps, 40 Gbps, 100 Gbps, 200 Gbps, 400 Gbps
BER Test	Generation and detection of test patterns, Count of errors in received test pattern, Pattern generation: Unframed (Layer 1), Framed Ethernet (MAC) header (Layer 2), Framed Ethernet (MAC) header with IP header (Layer 3) or Framed Ethernet (MAC) header, Framed with IP header and TCP/UDP header (Layer 4), User-defined header pattern (14 byte to 256 byte), Detection of sequence errors, loss of sequence synchronization, Frame loss count and frame loss seconds Throughput measurement results are calculated for: • Utilization layer, Physical layer, Physical layer excluding preamble, Link layer, Network layer and Data layer • Min./Max./Avg. values Performance (M.2100 type) parameters: ES, SES, ALS, UAT, AVT, EFS Test patterns: (Up to 100G) PRBS 9, PRBS 11, PRBS 15, PRBS 20, PRBS 23, PRBS 29, PRBS 31, HF test pattern, CRPAT, JTPAT, SPAT, 55 Hex, Fox, 32-bit user programmable (200G/400G) PRBS 31, 32-bit user programmable User-defined resolution: 1, 2, 5, 10, 15, 30 s, 1, 5, 10, 15, 30 min, 1, 2, 4, 6, 12 h Event log: Major measurement events incl. errors and alarms are logged with 1-second resolution.
Error Generation	FCS, Preamble, Error symbol, IFG for Ethernet (RJ45 port only), Wrong IP check sum, Fragmented IP, Wrong layer 4 check sum, PRBS bit error, BER test sequence error(10M ~ 100G), Sequence skip error (200G/400G)
Alarm Generation	No link, Remote fault
Service Disruption Measurement	Service disruption measurement activated as part of BER test • Disruption Type: Packet, LOS • Max./Avg. service disruption time 5 ns (10M/100M/1000M, 10G, 25G, 40G, 100G, 200G, 400G) 100 ns (10M/100M/1000M, 10G, 25G, 40G, 100G) • Number of service disruptions

RFC 2544 Testing	
Bit Rate	10 Mbps, 100 Mbps, 1 Gbps, 10 Gbps, 25 Gbps, 40 Gbps, 100 Gbps, 200 Gbps, 400 Gbps
RFC 2544 Testing	End-to-end network test mode (two MT1040A units in manual operation): • Throughput, Frame loss, Latency or Packet jitter, Back-to-back frames (burstability) End-to-end network test mode (two MT1040A units in Local-remote setup): • Throughput, Frame loss, Back-to-back frames (burstability) Router latency test mode: IP ping based latency test or packet jitter (up to 100G) • VLAN support: 1

Service Activation Test (Y.1564)	
Bit Rate	10 Mbps, 100 Mbps, 1 Gbps, 10 Gbps, 25 Gbps, 40 Gbps, 100 Gbps, 400 Gbps
Functions	• Up to 8 services per port • Color-aware and non-color-aware in combinations (IP DSCP or VLAN PCP) • Test modes: One-way (uni- or bi-directional, symmetrical or asymmetrical), Round-trip • Verification against service acceptance criteria: Information rate, Frame transfer delay, Frame delay variation, Frame loss rate, Availability Optional GPS timing synchronization
Service Configuration Test	• Subtests up to 100 Gbps: CIR, EIR, Traffic Policing, CBS, EBS 200 Gbps, 400 Gbps: CIR, EIR, Traffic Policing • Step duration: 1 s to 60 s (user programmable) • Number of steps: 1 to 10 (user programmable) • Slope: Rising/Falling • Results: Pass/Fail indication, IR (Min./Avg./Max.), FL (Count/FLR), FTD, FDV (Min./Avg./Max./Current (during measurement))
Service Performance Test	• All services tested simultaneously at CIR • Duration 15 min, 2 h, 24 h, user programmable • Results: Pass/Fail indication, IR (Min./Avg./Max.), FL (Count/FLR), FTD, FDV (Min./Avg./Max./Current (during measurement)), AVAIL (%)

Ethernet Testing Specifications

RFC 6349 TCP Throughput Test	
Bit Rate	10 Mbps, 100 Mbps, 1 Gbps, 10 Gbps
Function	Test Direction Setup • Local → Remote • Remote → Local • Simultaneous in both directions For RFC 6349 test sequence, user can choose to measure for: • Path MTU • Baseline RTT • Window Scan and Throughput • Multi-Service Multi-Service: DSCP or TOS can be set to each TCP connections Measurement results include: • Auto-calculation of Bandwidth Delay Product (BDP) • Transmitted and Retransmitted Bytes • TCP Transfer Time Ratio • TCP Efficiency • Retransmitted Percentage • Buffer Delay Percentage Supports connecting to iPerf server

Ethernet Network Synchronization Test	
Bit Rate	10 Mbps, 100 Mbps, 1 Gbps, 10 Gbps, 25 Gbps
SyncE Protocol Emulation	• Signal generation for Quality Level (QL) specified by SyncE function • Analysis of QL indicated in received Ethernet signal with alarm at missing QL indications. • SyncE results: SSM Rx count and rate, SSM Tx count, Indicated QL statistics, SSF seconds • ESMC messages captured and exported in Wireshark format.
IEEE 1588 v2 Protocol Emulation	• Each port of the Ethernet interface can act as a timing master or a timing slave independently. • Supported profiles: G.8265.1, G.8275.1, G.8275.2, SMPTE 2059-2, User Defined • When acting as master in Unicast (G.8265.1) mode, one slave is accepted at a time. • Setting the profile to SMPTE 2059-2 sets IGMP/MLD join/leave. • If the slave requires 32, 64, or 128 Sync messages per second, IEEE 1588-2008 paragraph 7.7.2.1 specifying 90% confidence interval is not supported. • Configurable parameters Domain: 0 to 255 Step Mode: One-step, Two-step Delay Mechanism: Delay request/response, Peer delay Negotiation: On/Off (Unicast only) Clock Source: Internal or UTC locked with GPS Clock Identify Priority#1, #2, Class, Time Source, Accuracy Index: 0 to 255 Announce Interval: 1/8 to 32 s Announce Timeout: 2 to 255 s Sync Interval: 1/128 to 32 s Minimum Delay Request Interval: 1/128 to 32 s Unicast Duration: 60 s to 1,000 s • Protocol Stack Layer2: Ethernet, Ethernet/VLAN, Ethernet/MPLS Layer3: None, IPv4, IPv6 • PTP Protocol Analysis Statistics of IEEE 1588 messages and message rate. Logged IEEE 1588 events: Clock state transitions, State transition events, Faults and Changes in grand-master clock IEEE 1588 messages captured and exported in Wireshark format

IP Channel Statistics	
Bit Rate	10 Mbps, 100 Mbps, 1 Gbps, 10 Gbps
Statistics	Statistics for up to 230 channels, identified by user-defined combinations of: • IPv4, IPv6 or MAC address • VLAN ID or MPLS label • Protocol information • IP next header (protocol) • TCP/UDP ports Traffic capacity: • 10 Mbps, 100 Mbps, 1 Gbps, 10 Gbps, line speeds: 100% line load Available Information per channel: • Frame count/rate, Throughput, Byte count, MPLS frames, IP frame/packet size distribution, IP header bytes, IP fragments, TTL threshold violations, IP packet count/rate, IP bytes, IP throughput, IP header errors, TCP/UDP bytes, TCP/UDP packet count/rate, Throughput, TCP/UDP errored packets, Undersize frames, Oversize frames

Ethernet Testing Specifications

Ethernet Frame Capture	
Bit Rate	10 Mbps, 100 Mbps, 1 Gbps, 10 Gbps, 25 Gbps, 40 Gbps, 100 Gbps, 200 Gbps, 400 Gbps
Capture Buffer Size	1024 kbyte When capture buffer full: Stop or Wrap
Capture Frame Slicing	If activated capture frame is first 64 bytes or 128 bytes of each frame (ignores rest of the frame)
Timestamp Resolution	100 ns
Include Tx Frame	On/Off
Capture Trigger	Manual, On error, Field match Trigger position: Top, Middle
Error Trigger	Fragmented frames, Oversize frames, Undersized frames, Undersized and oversized frames, FCS errored frames, Any type
Trigger Field Pattern Data	Enabled when capture trigger setting is "Field match" • Offset: 0 to 15999 bytes • Length: 1 bytes to 16 bytes
Capture Data	Pcap format for display in Wireshark

Wireshark® is a registered trademark of the Wireshark Foundation.

Discovery	
Bit Rate	10 Mbps, 100 Mbps, 1 Gbps, 10 Gbps, 25 Gbps, 40 Gbps, 100 Gbps, 200 Gbps, 400 Gbps
Function	The Auto Discovery feature allows a local Network Master Pro user to discover other remote Network Master Pro units on the network to complete testing. The local user can manage multiple testers remotely without a dedicated network connection. Support IP version: IPv4
Setting	Network: Src MAC Address, Src IP Address, Network Mask, Gateway, DHCP Connection Security: Password VLAN: OFF, 1, 2 Frame Capture: On/Off

MPLS/MPLS-TP	
Bit Rate	10 Mbps, 100 Mbps, 1 Gbps, 10 Gbps, 25 Gbps, 40 Gbps, 100 Gbps
Number of MPLS Header	Up to 8 MPLS headers set by user
Parameters per MPLS Header	User-defined label, Exp and TTL fields in each MPLS header • Address increment, Decrement and Random generation An EoMPLS (Ethernet over MPLS) or PWE3 (Pseudo-wire emulation edge-to-edge) label (RFC 4448 control word) can be added. MPLS can only transport VLAN if EoMPLS activated.
Statistics	• Number of labels (Max./Min.) • Number of MPLS-TP frames • Last received MPLS-TP label/priority/TTL
OAM (MPLS-TP)	ITU-T G.8113.1 comply Supported OAM messages • ITU-T Y.1731: CCM, LBM, LBR, LTM, LTR, AIS, LCK, TST, MCC, LMM, LMR, 1DM, DMM, DMR, EXM, EXR, VSM, VSR, SLM, SLR • IEEE 802.1ag: CCM, LBM, LBR, LTM, LTR

PBB (Mac-in-Mac MiM)	
Bit Rate	10 Mbps, 100 Mbps, 1 Gbps, 10 Gbps, 25 Gbps, 40 Gbps, 100 Gbps
Programmable Field	B-tag, I-tag, MAC destination and source addresses
Result	Number of PBB frames, Last received B-tag VLAN ID, Last received B-tag priority, Last received I-tag priority, Last received I-tag service ID
OAM	Supported OAM messages • ITU-T Y.1731: CCM, LBM, LBR, LTM, LTR, AIS, LCK, TST, MCC, LMM, LMR, 1DM, DMM, DMR, EXM, EXR, VSM, VSR, SLM, SLR • IEEE 802.1ag: CCM, LBM, LBR, LTM, LTR

Ethernet Testing Specifications

Ethernet OAM	
Bit Rate	10 Mbps, 100 Mbps, 1 Gbps, 10 Gbps, 25 Gbps, 40 Gbps, 100 Gbps
OAM Standards Supported	• ITU-T Y.1731 (Service layer OAM) • IEEE 802.1ag (Connectivity layer OAM) • IEEE 802.3 (formerly IEEE 802.3ah) (Access link OAM)
Messages Supported	Generates and receives following OAM messages. Supported OAM messages • ITU-T Y.1731: CCM, LBM, LBR, LTM, LTR, AIS, LCK, TST, MCC, LMM, LMR, 1DM, DMM, DMR, EXM, EXR, VSM, VSR, SLM, SLR • IEEE 802.1ag: CCM, LBM, LBR, LTM, LTR • IEEE 802.3ah: Information, Variable Request, Variable Response, Loopback Control
IEEE 802.3ah Function	• Discovery • Loopback activate
Statistics	• Number of each message generated/received

Ping Test	
Bit Rate	10 Mbps, 100 Mbps, 1 Gbps, 10 Gbps, 25 Gbps, 40 Gbps, 100 Gbps, 200 Gbps, 400 Gbps
Function	For Connectivity and Configuration check • Round Trip Time (RTT) • Supports IPv4 and IPv6 addressing • Answer incoming ping requests (On/Off) • VLAN Support: Off, 1, 2

Reflector	
Bit Rate	10 Mbps, 100 Mbps, 1 Gbps, 10 Gbps, 25 Gbps, 40 Gbps, 100 Gbps, 200 Gbps, 400 Gbps
Function	The following parameters are user selectable: • Reflector MAC/IPv4 address • Swap all MAC addresses or one specific MAC address • Swap IPv4/IPv6 addresses • Swap port numbers on UDP/TCP frames • Force ACK on TCP frames • Answer incoming ARP, Ping requests

Traceroute	
Bit Rate	10 Mbps, 100 Mbps, 1 Gbps, 10 Gbps, 25 Gbps, 40 Gbps, 100 Gbps, 200 Gbps, 400 Gbps
Function	Trace IP route over IP network • User-defined Max. number of hops (1 to 255) Information per hop: Ping time (Min./Max./Avg.), Number of ping timeouts

Cable Test	
Bit Rate	10 Mbps, 100 Mbps, 1 Gbps
Function	Identifies cable faults like short circuits, or breaks in wire pair, and displays distance from instrument to fault Support Cable: category 5/5e, 6/6a

10G WAN-PHY	
WAN Mode	10 Gbps Ethernet (normal), WAN-PHY (Mixed-frequency test pattern, Square wave pattern, PRBS31 pattern)
Terminology	SDH or SONET
Error Generation	SDH: A1A2, B1, B2, MS-REI, B3, HP-REI SONET: A1A2, B1, B2, REI-L, B3, REI-P
Alarm Generation	SDH: LOF, OOF, MS-AIS, MS-RDI, MS-TIM, AU-AIS, AU-LOP, HP-PLM, HP-UNEQ, HP-TIM, HP-RDI, LCD SONET: LOF, SEF, TIM-S, AIS-L, RDI-L, AIS-P, LOP-P, TIM-P, PLM-P, UNEQ-P, RDI-P
Error Measurement	SDH: A1A2, B1, B2, MS-REI, B3, HP-REI SONET: A1A2, B1, B2, REI-L, B3, REI-P G.826, G.828+G.829 or M.2101.1 (M.2100) error performance parameters are calculated
Alarm Detection	SDH: LOS, LOF, OOF, MS-AIS, MS-RDI, MS-TIM, AU-AIS, AU-LOP, HP-PLM, HP-UNEQ, HP-TIM, HP-RDI, LCD, LSS SONET: LOS, LOF, SEF, TIM-S, AIS-L, RDI-L, AIS-P, LOP-P, TIM-P, PLM-P, UNEQ-P, RDI-P, LCD-P, LSS
Overhead Byte Functionality	Generation of user-defined overhead bytes Capture and display of current overhead bytes

OTN Testing Specifications

Test Interface			
Model	MU104014B	MU104015A	MU104011A
Option	MU104014B-052 (Up to 10G) MU104014B-053/054 (40G) MU104014B-055/056 (100G) MU104014B-063 (ODU Multiplexing/Multi Stage)	MU104015A-052 (Up to 10G) MU104015A-053 (40G) MU104015A-055 (100G) MU104015A-063 (ODU Multiplexing/Multi Stage)	MU104011A-052 (Up to 10G) MU104011A-053/054 (40G) MU104011A-055/056 (100G) MU104011A-063 (ODU Multiplexing/Multi Stage)
Application Option	MU104014B-006 (100G Pluggable Coherent)	MU104015A-006 (100G Pluggable Coherent)	MU104011A-006 (100G Pluggable Coherent)
Frame	OTU4, OTU3, OTU3e1, OTU3e2, OTU2, OTU2e, OTU1e, OTU2f, OTU1f, OTU1		
100ZR Setting	• Tx power: dBm • Laser: On/Off • Frequency Setting: Grid, Channel/Frequency/Wavelength • APPSEL Custom Setting		
Test Application	BERT, RTD, APS		
Timing Source	Internal clock, Received clock, External clock (2-MHz signal, SETS (E1: 2.048 Mbps), BITS (DS1: 1.544 Mbps)), GPS receiver (with G0325A)		
Frequency Offset	±200 ppm, 0.1 ppm Step		
Scrambling	Complies with ITU-T G.709		

Mapping

OTU1/OTU2

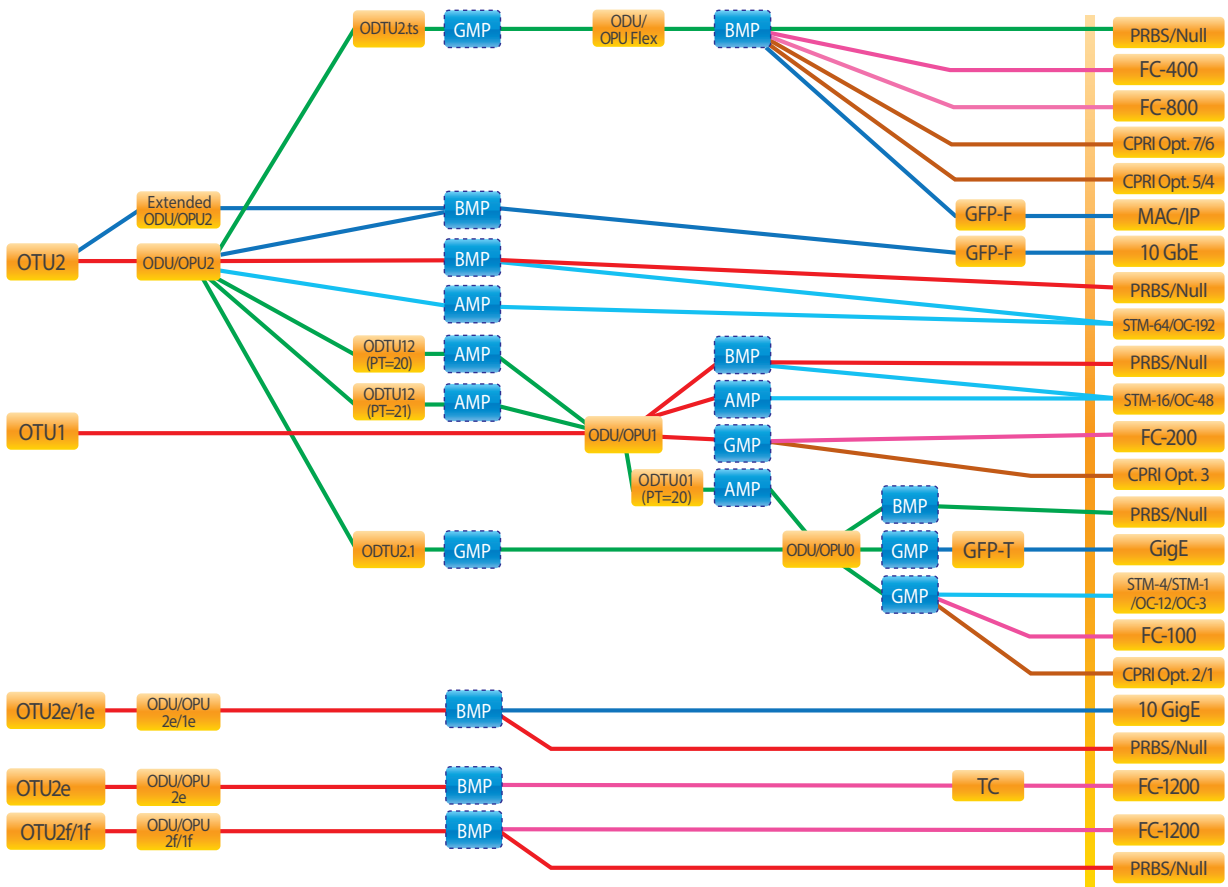

MU104014B-012 Ethernet up to 25G Dual Channel
MU104015A-012 Ethernet up to 25G Dual Channel
MU104011A-012 Ethernet up to 25G Dual Channel

MU104014B-052 OTN up to 10G Dual Channel
MU104015A-052 OTN up to 10G Dual Channel
MU104011A-052 OTN up to 10G Dual Channel

MU104014B-063 ODU Multiplexing/Multi Stage
MU104015A-063 ODU Multiplexing/Multi Stage
MU104011A-063 ODU Multiplexing/Multi Stage

MU104014B-074 CPRI/OBSAI up to 25G Dual Channel
MU104015A-074 CPRI/OBSAI up to 25G Dual Channel
MU104011A-074 CPRI/OBSAI up to 25G Dual Channel

MU104014B-082 SDH/SONET up to 10G Dual Channel
MU104015A-082 SDH/SONET up to 10G Dual Channel
MU104011A-082 SDH/SONET up to 10G Dual Channel

MU104014B-092 FC up to 16G Dual Channel
MU104015A-092 FC up to 16G Dual Channel
MU104011A-092 FC up to 16G Dual Channel

OTN Testing Specifications

OTU3

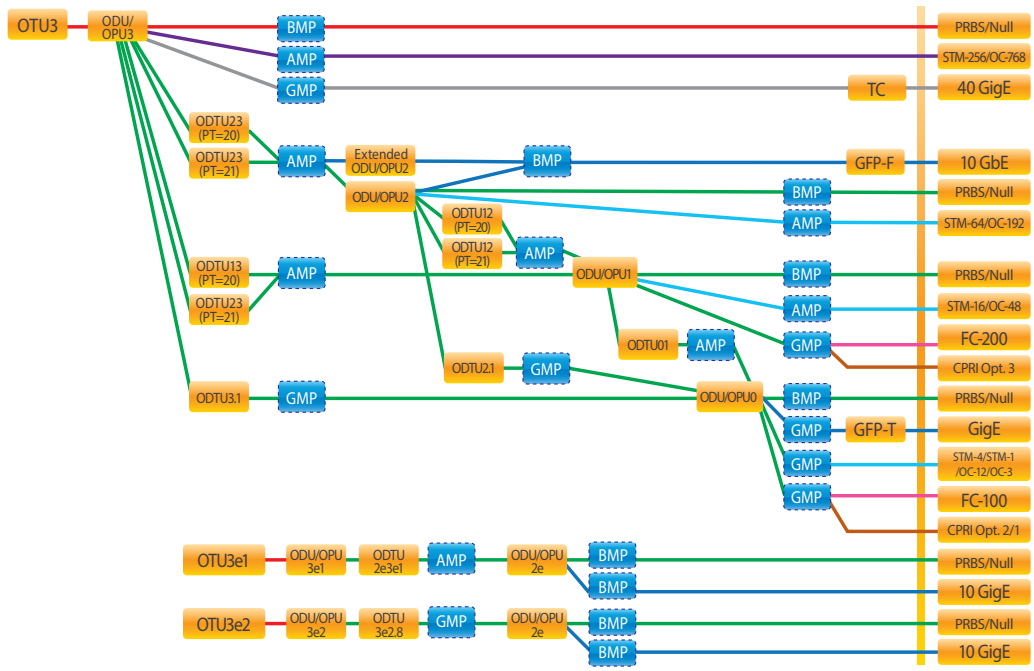

- MU104014B-012 Ethernet up to 25G Dual Channel
  MU104015A-012 Ethernet up to 25G Dual Channel
  MU104011A-012 Ethernet up to 25G Dual Channel
- MU104014B-053/054 OTN 40G Single/Dual Channel
  MU104015A-053 OTN 40G Single Channel
  MU104011A-053/054 OTN 40G Single/Dual Channel
- MU104014B-063 ODU Multiplexing/Multi Stage
  MU104015A-063 ODU Multiplexing/Multi Stage
  MU104011A-063 ODU Multiplexing/Multi Stage
- MU104014B-074 CPRI/OBSAI up to 25G Dual Channel
  MU104015A-074 CPRI/OBSAI up to 25G Dual Channel
  MU104011A-074 CPRI/OBSAI up to 25G Dual Channel
- MU104014B-082 SDH/SONET up to 10G Dual Channel
  MU104015A-082 SDH/SONET up to 10G Dual Channel
  MU104011A-082 SDH/SONET up to 10G Dual Channel
- MU104014B-092 FC up to 16G Dual Channel
  MU104015A-092 FC up to 16G Dual Channel
  MU104011A-092 FC up to 16G Dual Channel
- MU104014B-013/014 Ethernet 40G Single/Dual Channel
  MU104015A-013 Ethernet 40G Single Channel
  MU104011A-013/014 Ethernet 40G Single/Dual Channel
- MU104014B-084 STM-256/OC-768 Client Signal
  MU104015A-084 STM-256/OC-768 Client Signal
  MU104011A-084 STM-256/OC-768 Client Signal

OTU4

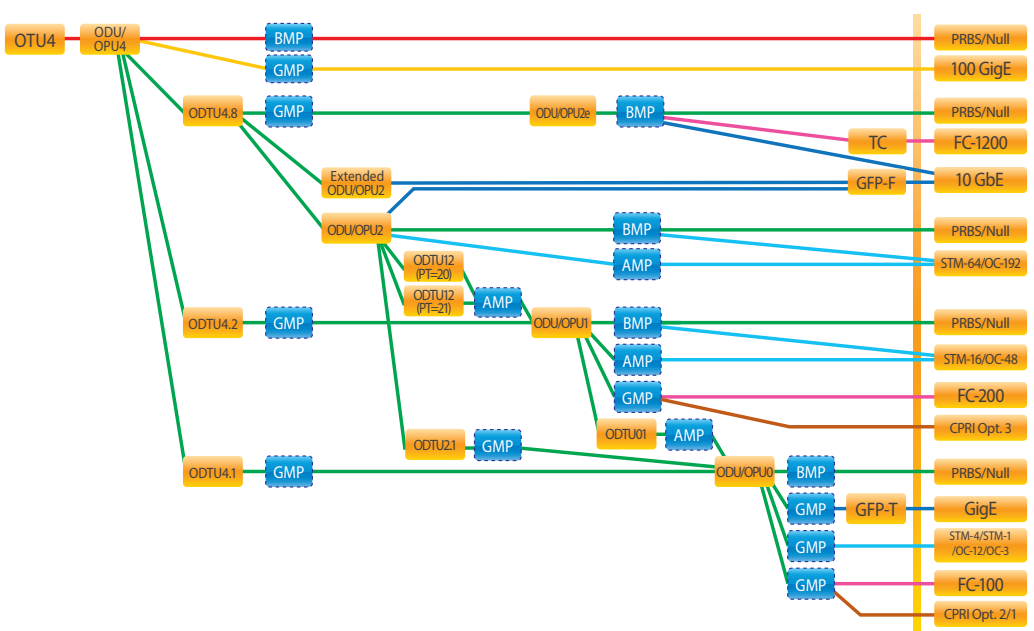

- MU104014B-012 Ethernet up to 25G Dual Channel
  MU104015A-012 Ethernet up to 25G Dual Channel
  MU104011A-012 Ethernet up to 25G Dual Channel
- MU104014B-055/056 OTN 100G Single/Dual Channel
  MU104015A-055 OTN 100G Single Channel
  MU104011A-055/056 OTN 100G Single/Dual Channel
- MU104014B-063 ODU Multiplexing/Multi Stage
  MU104015A-063 ODU Multiplexing/Multi Stage
  MU104011A-063 ODU Multiplexing/Multi Stage
- MU104014B-015/016 Ethernet 100G Single/Dual Channel
  MU104015A-015 Ethernet 100G Single Channel
  MU104011A-015/016 Ethernet 100G Single/Dual Channel
- MU104014B-074 CPRI/OBSAI up to 25G Dual Channel
  MU104015A-074 CPRI/OBSAI up to 25G Dual Channel
  MU104011A-074 CPRI/OBSAI up to 25G Dual Channel
- MU104014B-082 SDH/SONET up to 10G Dual Channel
  MU104015A-082 SDH/SONET up to 10G Dual Channel
  MU104011A-082 SDH/SONET up to 10G Dual Channel
- MU104014B-092 FC up to 16G Dual Channel
  MU104015A-092 FC up to 16G Dual Channel
  MU104011A-092 FC up to 16G Dual Channel

OTN Testing Specifications

OTN Configuration			
Model	MU104014B	MU104015A	MU104011A
OTN Alarms	Detected alarms • OTU layer: OTU-AIS, LOF, OOF, LOM, OOM, SM-TIM, SM-BIAE, SM-BDI, SM-IAE • ODU layer: LOS, ODU-AIS, ODU-OCI, ODU-LCK, PM-TIM, PM-BDI, FSF, FSD, BSF, BSD • ODU multiplexing: ODU-LOFLOM, ODU-OOF, OOM, ODU-AIS, ODU-OCI, ODU-LCK, PM-TIM, PM-BDI, MSIM • OPU layer: PLM, OPU-MSIM, Client AIS, CSF. LSS • TCM: TCMi-TIM, TCMi-BIAE, TCMi-BDI, TCMi-IAE, TCMi-LTC (i = 1 ..6) • OTL: LOF, OOF, OOR, LOR, ILA/OLA (OTU4, OTU3, OTU3e1, OTU3e2) Generated alarms • OTU layer: OTU-AIS, OTU-OOF/LOF, OOM/LOM, SM-TIM, SM-BIAE, SM-BDI, SM-IAE • ODU layer: ODU-AIS, ODU-OCI, ODU-LCK, PM-TIM, PM-BDI, FSF, FSD, BSF, BSD • ODU multiplexing: OOF/LOF, OOM/LOM, ODU-AIS, ODU-LCK, PM-TIM, PM-BDI, FSF, FSD, BSF, BSD • OPU layer: Client AIS, CSF • TCM: TCMi-TIM, TCMi-BIAE, TCMi-IAE, TCMi-BDI, TCMi-LTC (i = 1 ..6) • OTL: LOF, OOF, OOR, LOR (OTU4, OTU3, OTU3e1, OTU3e2)		
OTN Errors	Detected errors • OTU layer: FAS, MFAS, SM-BEI, SM-BIP8, FEC-Correctable, FEC-Uncorrectable • ODU layer: PM-BIP8, PM-BEI • OPU layer: Pattern error • GMP error: CRC8 error, CRC5 error • GFP errors: cHEC corrected, cHEC uncorrectable, tHEC corrected, tHEC uncorrectable, CSF Signal, CSF Sync, Invalid GFP Frame, Superblock CRC, eHEC corrected, eHEC uncorrectable, FCS, CMF Sync, CMF Signal, SSF, PTI Missmatch, UPI Mismatch • TCM: TCMi-BEI, TCMi-BIP-8 (i = 1 to 6) • OTL: MFAS, LLM (OTU4, OTU3, OTU3e1, OTU3e2) Generated errors • OTU layer: Bit all, FAS, OTU-FAS, MFAS, SM-BIP8, SM-BEI • ODU layer: PM-BIP8, PM-BEI, ODU-FAS • TCMi-BIP8, TCMi-BEI (i = 1 to 6) • Pattern error • GMP: CRC8, CRC5, Invalid JC1, Invalid JC2,Invalid JC1&JC2 • GFP: cHEC, tHEC, Superblock CRC, eHEC, FCS, CMF Inserted Error bits are editable. • OTL: MFAS, LLM (OTU4, OTU3, OTU3e1, OTU3e2)		
Error Performance	G.8201/M.2401 analysis of received signal based on detected errors and alarms: BBE, BBER, SES, SESR, UNAV		
Justification Analysis	Count • AMP: Positive (+1), Positive (+2), Negative (–1), Offset (ppm) • GMP: CRC8 Error, CRC5 Error, Inc, Inc > 1, Inc > 2, Inc Over, Dec, Dec > 1, Dec > 2, Dec Over, Offset (ppm), Cm (t) Max., Cm (t) Min.		
BER Test Pattern	Pattern generation and detection for bulk test patterns: • Test patterns: PRBS 9, PRBS 11, PRBS 15, PRBS 20, PRBS 23, PRBS 29, PRBS 31, Null PRBS patterns can be inverted. • User-defined patterns (Pattern length: 2048 bits, 32 bits)		
FEC Test	ITU-T O.182 Random error insertion		
Overhead	User-editable header bytes • OTU layer: FAS, SM, GCC0, RES • ODU layer: PM, FTFL, APS/PCC, GCC1, GCC2, RES, EXP, TCMi (i = 1 to 6) • OPU layer(s): PSI Capture and display current overhead bytes • The following signals are decoded: TTI (SM, PM, TCMi (i = 1 to 6) of high-order, FTFL, PT)		
OTL Skew	OTU4, OTU3, OTU3e1, OTU3e2 • Insertion Bits: 0 to 32000 (LLD) • Detection Relative skew, Marker map		
Client Signal	In addition to the MU104014B-063, mapping is supported by installing the interface option for the test target.	In addition to the MU104015A-063, mapping is supported by installing the interface option for the test target.	In addition to the MU104011A-063, mapping is supported by installing the interface option for the test target.
Through Mode	• Transparent mode • OH overwrite mode The OTU, ODU and OPU overhead can be changed. The FEC encoder and decoder can be set On/Off in any mode		

OTN Testing Specifications

OTN Results	
Status	Current information on: • Alarms and errors on monitored line • Input level indication for optical signals • Frequency • Frequency deviation
Statistics	User-defined measurement resolution: 1, 2, 5, 10, 15, 30 s, 1, 5, 10, 15, 30 min, 1, 2, 4, 6, 12 h Logged information: Alarms (s), Errors (count or count and ratio), Client Frequency, Deviation
APS	APS (Automatic Protection Switching) test and analysis • APS switching time is measured. A switching time exceeding the user-defined threshold is highlighted. • Start and stop triggers can be selected independently. • Trigger events can be selected from the high-order OTU and ODU, Pattern bit error, LOS (Loss of Signal). • Switching time, Switching count, Pass/Fail, Minimum, Maximum and Average can be displayed. • APS switching time measurement resolution: 0.1 ms
Round Trip Delay (Propagation Time) Measurement	Resolution: 0.1 µs Measured Max. time: 10.0 s Interval: 0.5, 1, 2, 5, 10 s
Tributary Scan	Support rate: OTU2, OTU1e, OTU2e, OTU1f, OTU2f, OTU1 Detected alarms: OTU-AIS, LOF, OOF, LOM, OOM, SM-BIAE, SM-BDI, SM-IAE, ODU-AIS, ODU-OCI, ODU-LCK, PM-BDI, LOFLOM

Mobile xHaul Testing Specifications

Test Interface			
Model	MU104014B	MU104015A	MU104011A
Option	MU104014B-074 (CPRI/OBSAI Up to 25G) MU104014B-012 (eCPRI/RoE Up to 25G) MU104014B-013/014 (eCPRI/RoE 40G) MU104014B-015/016 (eCPRI/RoE 100G)	MU104015A-074 (CPRI/OBSAI Up to 25G) MU104015A-012 (eCPRI/RoE Up to 25G) MU104015A-013 (eCPRI/RoE 40G) MU104015A-015 (eCPRI/RoE 100G)	MU104011A-074 (CPRI/OBSAI Up to 25G) MU104011A-012 (eCPRI/RoE Up to 25G) MU104011A-013/014 (eCPRI/RoE 40G) MU104011A-015/016 (eCPRI/RoE 100G)
Bit Rate	CPRI: 614.4, 1228.8, 2457.6, 3072.0, 4915.2, 6144.0, 9830.4, 10137.6, 12165.12, 24330.24 Mbps OBSAI: 768, 1536, 3072.0, 6144.0 Mbps eCPRI/RoE (IEEE1914.3): 10M/100M/1000 Mbps, 1 Gbps, 10 Gbps, 25 Gbps, 40 Gbps, 100 Gbps		
Test Application	CPRI/OBSAI BERT, CPRI Pass Through, eCPRI/RoE BERT		

CPRI/OBSAI BER Test	
Port Mode	Off, Normal, Through (CPRI Link)
Timing Source	Internal clock, Received clock, External clock (2-MHz signal, SETS (E1: 2.048 Mbps), BITS (DS1: 1.544 Mbps)), GPS receiver (with G0325A)
Frequency Offset	±200 ppm, 0.1 ppm step
Content	Unframed, CPRI Link, OBSAI Link
Pattern	PRBS 15, PRBS 20, PRBS 23, PRBS 29, PRBS 31, User 32 bits*, Off *: Option 9 and Option 10 can be set in 8-bit units
CPRI	
Bit Rate	614.4, 1228.8, 2457.6, 3072.0, 4915.2, 6144.0, 9830.4, 10137.6, 12165.12, 24330.24 Mbps
FEC	Not supported: CPRI Option 1, 2, 3, 4, 5, 6, 7, 8 Supported: CPRI Option 9, 10
CPRI Link	Start up: Enabled, Disabled Role: Master, Slave Protocol version: 1, 2 HDLC rate: no HDLC, 240, 480, 960, 1920, 2400 kbit/s, Highest possible Ethernet: On, Off; Pointer: 20 to 63
Alarm Insertion	Signal Loss, LOS, LOF, LSS, Remote-LOS, Remote-LOF, RAI, SDI, Reset
Error Insertion	Item: LCV, SHV, K30.7, Pattern error, FEC Symbol Error Insertion timing: Manual, Rate
Alarm Detection	Signal loss, LOS, LOF, LSS
Error Detection	LCV, SHV, K30.7, Pattern error, FEC Symbol Error
FEC Error Detection	LOFA, Corr. CW, Uncorr. CW, FEC Symbol Error
Remote Status	Remote LOS, Remote LOF, RAI, SDI, Reset
Link	Rx: Protocol version, HDLC rate, Pointer P Tx: Protocol version, HDLC rate, Pointer P
Statistics	Alarms: Signal loss, LOS, LOF, LSS, Remote LOS, Remote LOF, RAI, SDI, Reset Errors: LCV, SHV, K30.7, Pattern error, FEC Symbol Error Frames count: Rx hyper frame, Rx code words, Tx hyper frame, Tx code words Delay: Delay, Average Delay, Min. Delay, Max. Delay Measurement count
OBSAI	
Bit Rate	768, 1536, 3072.0, 6144.0 Mbps
OBSAI Link	Tx: Force idle, Scramble seed, RP3 address, RP3 type Rx: Forced scrambler seed, Rx Filter, Scramble seed, RP3 address, RP3 type
Alarm Insertion	Signal Loss, LOF, No message, LSS
Error Insertion	Item: LCV, K30.7, Pattern error Insertion timing: Manual, Rate
Alarm Detection	Signal Loss, LOF, No message, LSS
Error Detection	LCV, K30.7, Pattern error
Link	Rx: Sync state
Statistics	Alarms: Signal loss, LOF, LSS Errors: LCV, K30.7, Pattern error Frames count: Tx/Rx Message Groups Delay: Delay, Average Delay, Min. Delay, Max. Delay Measurement count
CPRI/OBSAI APS	APS (Automatic Protection Switching) test and analysis • APS switching time is measured. A switching time exceeding the user-defined threshold is highlighted. • Trigger events (user selectable) • Alarm: Signal Loss, LOS(CPRI), LOF • Error: LCV, SHV(CPRI), Pattern error • Remote Alarm(CPRI): Remote LOS, Remote LOF, RAI, SDI, Reset • Switching time, Switching count, Pass/Fail, Minimum, Maximum and Average can be displayed. • APS switching time measurement resolution: 1 µs

CPRI Pass Through	
Port Mode	Off, Normal
Bit Rate	614.4, 1228.8, 2457.6, 3072.0, 4915.2, 6144.0, 9830.4, 10137.6 Mbps
BER Statistics	Alarms: Signal loss, LOS, LOF, LSS, Remote LOS, Remote LOF, RAI, SDI, Reset Errors: LCV, SHV , K30.7, Pattern error

eCPRI/RoE (IEEE1914.3) BER Test (Setting)	
Bit Rate	10 Mbps, 100 Mbps, 1 Gbps, 10 Gbps, 25 Gbps, 40 Gbps, 100 Gbps
Frame Length	eCPRI: 50 byte to 16000 byte RoE: 51 byte to 16000 byte
eCPRI Frame Configuration	• Transmitting mode: Normal, Burst • Variable line rate traffic generation, up to full line rate • Line load profile: Constant, Ramp • Traffic duration: Continuous, Programmable number of seconds or frames • Frame sizes: Constant • Protocol Stack Ethernet-eCPRI, Ethernet-IPv4-UDP-eCPRI, Ethernet-IPv6-UDP-eCPRI, Ethernet-VLAN-eCPRI, Ethernet-VLAN-IPv4-UDP-eCPRI, Ethernet-VLAN-IPv6-UDP-eCPRI, • eCPRI frame parameter • Common Header: Following the Message Type can be chosen IQ Data, Bit Sequence, Real-Time Control Data, Generic Data Transfer, Remote Memory Access, One-way Delay Measurement, Remote Reset, Event Indication, User Defined, None • Message Header: Change of Message Type • Payload: PRBS31 • Increment, Decrement and Random: PC_ID, SEQ_ID, RTC_ID, RESET_ID
RoE (IEEE1914.3) Frame Configuration	• Transmitting mode: Normal, Burst • Variable line rate traffic generation, up to full line rate • Line load profile: Constant, Ramp • Traffic duration: Continuous, Programmable number of seconds or frames • Frame sizes: Constant • Protocol Stack Ethernet-RoE, Ethernet-VLAN-RoE • RoE Frame setting • Common Header: Following the Sub Type can be chosen RoE Control sub type, RoE Structure-agnostic data sub type, RoE Structure-aware CPRI data sub type, RoE Slow C&M CPRI sub type, RoE Native time domain data sub type, RoE Native frequency domain data sub type, RoE Native PRACH data sub type, User Defined, None • Flow ID: Fixed, Increment, Decrement and Random • Ordering info: Fixed, Increment, Decrement and Random • Sub Header: Choice of the Sub Type • Payload: PRBS31
VLAN, ARP, IP/UDP Address Setting	• Two VLAN tags supported • Generate pause frames, Respond to pause frames • Answer incoming ARP, Ping requests (On/Off) The following items can also be set only when eCPRI is selected. • Configurable IP and Ethernet source and destination addresses (supports IPv4 and IPv6 addressing) IPv4: Fixed, DHCP, DNS IPv6: Fixed, NDP • Address increment, Decrement and Random generation supported • User programmable UDP port number • UDP check sum: Automatic
Timing Source	Internal clock, Received clock, External clock (2-MHz signal, SETS (E1: 2.048 Mbps), BITS (DS1: 1.544 Mbps)), GPS receiver (with G0325A)
Frequency Offset	±200 ppm, 0.1 ppm step
Receive Setting	User-defined expected preamble length: 3 bytes to 15 bytes User-defined IFG lower threshold: 8 bytes to 15 bytes (RJ45 port only) User-defined Jumbo frame size upper limit: 1519 bytes to 16000 bytes
Error Generation	IFG for Ethernet (RJ45 port only), FCS, Preamble, Error symbol/block, Wrong IP check sum, Fragmented IP, Wrong layer 4 check sum, PRBS bit error, BER test sequence error
Alarm Generation	No link, Remote fault
Link Fault Signaling (LFS) Emulation	10 Gbps, 25 Gbps, 40 Gbps, 100 Gbps

SyncE Protocol Emulation	• Support Interfaces: 10 Mbps (Electric), 100 Mbps (Electric/Optical), 1 Gbps (Electric/Optical), 10 Gbps (Optical), 25 Gbps (Optical) • Signal generation for Quality Level (QL) specified by SyncE function • Analysis of QL indicated in received Ethernet signal with alarm at missing QL indications. • SyncE results: SSM Rx count and rate, SSM Tx count, Indicated QL statistics, SSF seconds • ESMC messages captured and exported in Wireshark format.
IEEE 1588 v2 Protocol Emulation	• Support Interface: 10 Mbps (Electric), 100 Mbps (Electric/Optical), 1 Gbps (Electric/Optical), 10 Gbps (Optical), 25 Gbps (Optical) • Each port of the Ethernet interface can act as a timing master or a timing slave independently. • Supported profiles: G.8265.1, G.8275.1, G.8275.2, User Defined • When acting as master in Unicast (G.8265.1) mode, one slave is accepted at a time. • If the slave requires 32, 64, or 128 Sync messages per second, IEEE 1588-2008 paragraph 7.7.2.1 specifying 90% confidence interval is not supported. Configurable parameters Domain: 0 to 255 Step Mode: One-step, Two-step Delay Mechanism: Delay request/response, Peer delay Negotiation: On/Off (Unicast only) Clock Source: Internal or UTC locked with GPS Clock Identify Priority#1, #2, Class, Time Source, Accuracy Index: 0 to 255 Announce Interval: 1/8 to 32 s Announce Timeout: 2 to 255 s Sync Interval: 1/128 to 32 s Minimum Delay Request Interval: 1/128 to 32 s Unicast Duration: 60 s to 1,000 s • Protocol Stack Layer2: Ethernet, Ethernet/VLAN, Ethernet/MPLS Layer3: None, IPv4, IPv6 • PTP Protocol Analysis Statistics of IEEE 1588 messages and message rate. Logged IEEE 1588 events: Clock state transitions, State transition events, Faults and Changes in grand-master clock IEEE 1588 messages captured and exported in Wireshark format
E-OAM	Standards Supported • ITU-T Y.1731 (Service layer OAM) • IEEE 802.1ag (Connectivity layer OAM) • IEEE 802.3 (formerly IEEE 802.3ah) (Access link OAM) Generates and receives following OAM messages. • ITU-T Y.1731: CCM, LBM, LBR, LTM, LTR, AIS, LCK, TST, MCC, LMM, LMR, 1DM, DMM, DMR, EXM, EXR, VSM, VSR, SLM, SLR • IEEE 802.1ag: CCM, LBM, LBR, LTM, LTR • IEEE 802.3ah: Information, Variable request, Variable response, Loopback control
IEEE 802.3ah Function	• Discovery • Loopback activate

eCPRI/RoE (IEEE1914.3) BER Test (Counter, Monitor)	
Bit Rate	10 Mbps, 100 Mbps, 1 Gbps, 10 Gbps, 25 Gbps, 40 Gbps, 100 Gbps
Status	• Link status, Interface type, Jabber detected, Frames present, MPLS/EoMPLS/VLAN, Speed, Full or half duplex, Local clock (Ethernet 1000 Mbps), LFS LF/RF (Ethernet 10 Gbps), Signal present, Bit rate of incoming Ethernet signal, Auto negotiation complete • Link partner abilities: Pause capable and Asymmetric pause request (not Ethernet 10 Gbps and more), Remote fault, Speed/Duplex • Indicators for Utilization, Throughput and Errored frames • Signal level indication for optical Ethernet interfaces • LFS local fault, LFS remote fault, High BER, LOA (10 Gbps, 25 Gbps) • Invalid sync header, Invalid alignment marker, BIP error, Invalid block (10 Gbps, 25 Gbps)
Resolution	• User-defined resolution for statistical measurements: 1, 2, 5, 10, 15, 30 s, 1, 5, 10, 15, 30 min, 1, 2, 4, 6, 12 h • Event log: Major measurement events incl. errors and alarms are logged with 1-second resolution.

Mobile xHaul Testing Specifications

Performance Statistics	• Utilization (Max./Min./Avg.), Throughput (Max./Min./Avg.), Frame rate (Max./Min./Avg.)
Frame Statistics	• Total frames, Total valid frames, Unicast/Multicast/Broadcast frames, Number of pause frames • Number of VLAN tagged frames, Max. number of VLAN layers detected, Last received VLAN ID, Last received VLAN priority • Number of MPLS frames and MPLS-TP frames. Max. number of MPLS layers detected. Last received MPLS Label, MPLS Priority and MPLS TTL. • Number of PBB frames. Last received B/I-tag ID and B/I-tag priority. • Total errored frames, Fragmented frames, Number of oversized and undersized (runts) frames, Number of FCS errored frames, Error symbol frames (not 10 Gbps)/Code violation frames (10 Gbps), Number of collisions (10 Mbps, 100 Mbps half duplex), Preamble violations, IFG violations (RJ45 port only), False carrier, LFS LF (local fault), LFS RF (remote fault)
Burst Statistics	• Total frames, Total valid frames, Number of burst, Total frames in bursts, Burst size (Max./Min./Avg.)
Frame Distribution Statistics	• Total valid/ frames, 64 to 127, 128 to 255, 256 to 511, 512 to 1023, 1024 to 1518 byte frames, Total number of jumbo frames • Frame size (Max./Min./Avg.)
Adjustable Threshold	Utilization, Throughput, Errored frames, Collision rate, Unicast frames, Multicast frames, Broadcast frames, Pause frames, Fragmented frames, Undersized frames (runts), Oversized frames, FCS errored frames, IFG violations (RJ45 port only), Preamble violations, BER test pattern errors, Sequence errors, Diff.Tx-Rx
BER Test	Generation and detection of test patterns, Count of errors in received test pattern, Detection of sequence errors, loss of sequence synchronization, Frame loss count and frame loss seconds Throughput measurement results are calculated for: • Utilization layer, Physical layer, Physical layer excluding preamble, Link layer, Network layer and Data layer • Min./Max./Avg. values Performance (M.2100 type) parameters: ES, SES, ALS, UAT, AVT, EFS Test patterns: PRBS31 User-defined resolution: 1, 2, 5, 10, 15, 30 s, 1, 5, 10, 15, 30 min, 1, 2, 4, 6, 12 h Event log: Major measurement events incl. errors and alarms are logged with 1-second resolution.

eCPRI/RoE (IEEE1914.3) BER Test (Frame Capture)	
Bit Rate	10 Mbps, 100 Mbps, 1 Gbps, 10 Gbps, 25 Gbps, 40 Gbps, 100 Gbps
Capture Buffer Size	1024 kbyte When capture buffer full: Stop or Wrap
Capture Frame Slicing	If activated capture frame is first 64 bytes or 128 bytes of each frame (ignores rest of the frame)
Timestamp Resolution	100 ns
Include Tx Frame	On/Off
Capture Trigger	Manual, On error, Field match Trigger position: Top, Middle
Error Trigger	Fragmented frames, Oversize frames, Undersized frames, Undersized and oversized frames, FCS errored frames, Any type
Trigger Field Pattern Data	Enabled when capture trigger setting is Field match • Offset: 0 to 15999 bytes • Length: 1 bytes to 16 bytes
Capture Data	Pcap format for display in Wireshark

Fibre Channel Testing Specifications

Test Interface			
Model	MU104014B	MU104015A	MU104011A
Option	MU104014B-092 (Up to 16G)	MU104015A-092 (Up to 16G)	MU104011A-092 (Up to 16G)
Bit Rate	1.0625 Gbps (FC-100/1GFC), 2.125 Gbps (FC-200/2GFC), 4.25 Gbps (FC-400/4GFC), 8.5 Gbps (FC-800/8GFC), 10.52 Gbps (FC-1200/10GFC), 14.025 Gbps (FC-1600/16GFC)		
Test Application	FC-Performance Test, FC-BERT, FC-Reflector		

FC-BERT	
Port mode	Off, 1GFC, 2GFC, 4GFC, 8GFC, 10GFC, 16GFC
Timing source	Internal clock, Received clock, External clock (2-MHz signal, SETS (E1: 2.048 Mbps), BITS (DS1: 1.544 Mbps)), GPS receiver (with G0325A)
Topology	Point-to-point, Fabric, E-Port
Flow Control	Credit based transmitter: On/Off Buffer-to-buffer credit configuration: 1 to 65535, Buffer-to-buffer credit and R_RDY counters, R_RDY injection
Source ID	Port WWN: User define or Default ID: 000000 to FFFFFF
Destination ID	Port WWN: User define or Default ID: 000000 to FFFFFF
Traffic Generation	• 1GFC (with SOF and EOF frame delimiters and 2GFC frames), Class-3 service frames • Traffic shaping: Constant, Ramp, Burst, 2GFC frame header configuration • Frame length configuration: 3240 bytes (max.)
BER test	• Test modes: Unframed BER test, Layer 1 BER test, Layer 2 BER test • Test patterns: PRBS 9, PRBS 11, PRBS 15, PRBS 20, PRBS 23, PRBS 29, PRBS 31, HF test pattern, CSPAT, CJPAT, CRPAT, JTPAT, SPAT, 55 Hex, Fox, 32-bit user programmable, ZERO • Error injection: Bit, CRC, Symbol • Results: Pattern loss seconds, Traffic loss seconds, Bit error count, BER
Measurement	• Alarm detection: LOS, Link down, Pattern loss • Service disruption measurement: Average/Max service disruption, Number of service disruptions • Traffic statistics: Bandwidth utilization, Data rate, Frame count, Byte count, Frame size distribution, Buffer-to-buffer credit count, R_RDY count, Frame loss count, Round trip delay, Packet jitter, Bit errors, CRC errors, Symbol errors, LR, LRR, NOS, OLS

FC-Reflector	
Port mode	Off, 1GFC, 2GFC, 4GFC, 8GFC, 10GFC, 16GFC
Timing Source	Internal clock, Received clock, External clock (2-MHz signal, SETS (E1: 2.048 Mbps), BITS (DS1: 1.544 Mbps)), GPS receiver (with G0325A)
Topology	Point-to-point, Fabric, E-Port
Flow Control	Credit based transmitter: On/Off Buffer-to-buffer credit configuration: 1 to 65535, Buffer-to-buffer credit and R_RDY counters, R_RDY injection
Source ID	Port WWN: User define or Default
Frame Setup	Framing: SOF: Data: EOF or SOF: Header: Data: CRC:EOF

FC-Performance Test	
Port mode	Off, 1GFC, 2GFC, 4GFC, 8GFC, 10GFC, 16GFC
Timing source	Internal clock, Received clock, External clock (2-MHz signal, SETS (E1: 2.048 Mbps), BITS (DS1: 1.544 Mbps)), GPS receiver (with G0325A)
Topology	Point-to-point, Fabric, E-Port
Flow Control	Credit based transmitter: On/Off Buffer-to-buffer credit configuration: 1 to 65535, Buffer-to-buffer credit and R_RDY counters, R_RDY injection
Source ID	Port WWN: User define or Default ID: 000000 to FFFFFF
Destination ID	Port WWN: User define or Default ID: 000000 to FFFFFF
Test Configuration	Test Mode: Port-to-Port Test, Loopback Test Test Items: Throughput, Traffic Profile, Latency, Burst, Credit

SDH/SONET Testing Specifications

Test Interface			
Model	MU104014B	MU104015A	MU104011A
Option	MU104014B-082 (Up to 10G)	MU104015A-082 (Up to 10G)	MU104011A-082 (Up to 10G)
Bit Rate	Optical (SFP/SFP+): STM-1/OC-3, STM-4/OC-12, STM-16/OC-48, STM-64/OC-192		
Test Application	BERT, RTD, APS		

SDH/SONET Configuration	
Framing	SDH: Complies with ITU-T G.707, SONET: Complies with Telcordia GR-253
Transmitter Clock	Internal clock, Received clock, External clock (2-MHz signal, SETS (E1: 2.048 Mbps), BITS (DS1: 1.544 Mbps)), GPS receiver (with G0325A)
Frequency Offset	±200 ppm, 0.1 ppm step
TCM Frame Format	ITU-T G.783, G.707 Annex D (TCM option 2) and Annex E, POH bytes: N1 (VC-4, VC-3), Z5 (STS-3c, STS-1), N2 (VC-12, VC-11), Z6 (VT-2, VT-1.5), TCM Access Point Identifier (Apid): 15 bytes ASCII sequence, CRC-7
Scrambling	SDH: ITU-T G.707 compliant, SONET: Telcordia GR-253 compliant

SDH Mapping

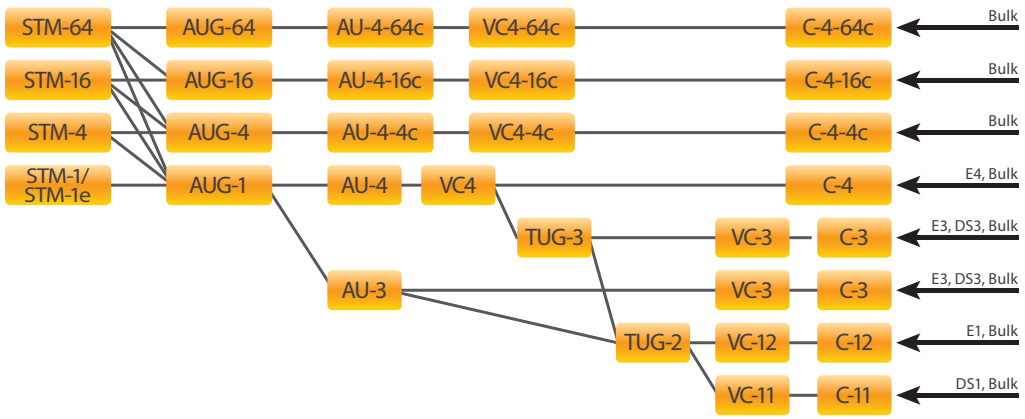

SONET Mapping

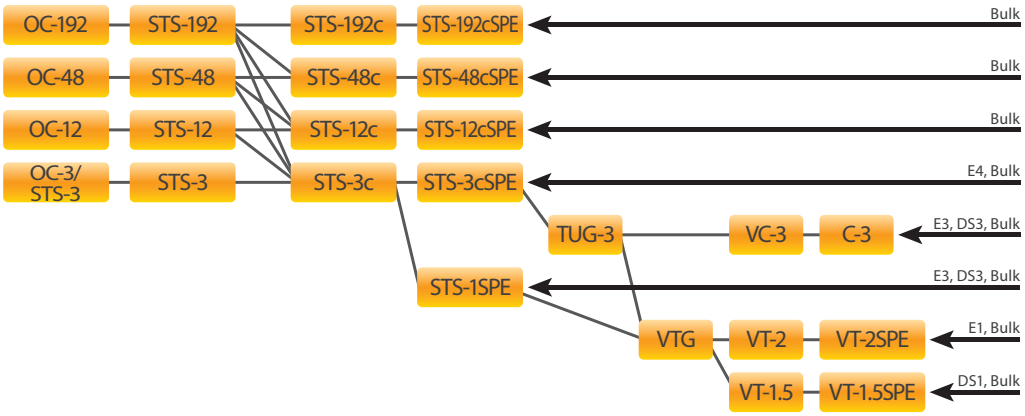

SDH/SONET Testing Specifications

SDH/SONET Testing	
Alarms	Detected and generated alarms • SDH: LOS, LOF, OOF, MS-AIS, MS-RDI, AU-AIS, AU-LOP, HP-PLM, HP-UNEQ, HP-TIM, HP-RDI, TU-LOM, TU-AIS, TU-LOP, LP-PLM, LP-UNEQ, LP-TIM, LP-RDI, LSS • SONET: LOS, LOF, OOF, AIS-L, RDI-L, AIS-P, LOP-P, TIM-P, PLM-P, UNEQ-P, RDI-P, LOM-V, AIS-V, LOP-V, PLM-V, UNEQ-V, RDI-V, TIM-V, LSS • TCM: TC-LTC, TC-TIM, TC-UNEQ, TC-AIS, TC-RDI, TC-ODI Inserted alarms • Permanent • Alternate: 1 to 8000 consecutive alarm frames, 1 to 8000 consecutive normal frames
Errors	Detected and generated errors • SDH: A1/A2, B1, B2, MS-REI, B3, HP-REI, V5/B3, LP-REI, Pattern error, ERR trans • SONET: A1/A2, B1, B2, REI-L, B3, REI-P, V5/B3, REI-V, Pattern error, ERR trans • TCM: TC-IEC, TC-BIP2, TC-REI, TC-OEI Error insertion • Manual: 1 to 8000 consecutive errors (excluding Pattern error) 1 to 4000 consecutive errors (for Pattern error) • Continuous: 10^{-3}, 10^{-4}, 10^{-5}, 10^{-6}, 10^{-7}, 10^{-8}, 10^{-9}, 10^{-10} (The available highest rate varies depending on the error item.) • Alternate: 1 to 8000 consecutive error frames, 1 to 8000 consecutive normal frames (excluding Pattern error and ERR trans) 1 to 4000 consecutive error bits, 100 to 4000 consecutive normal bits (for Pattern error)
BER Test Pattern	Pattern generation and detection for O.181 bulk test pattern • Test patterns supported: PRBS 9, PRBS 11, PRBS 15, PRBS 20, PRBS 23, PRBS 29, PRBS 31 PRBS patterns can be inverted. All 0 s, All 1 s, Alternating 1: 1, Alternating 1: 3, Alternating 1: 7, 2 in 8 User-defined patterns (Pattern length: up to 2048, Length step: 8-bit)
Pointer	• Support pointer events monitoring and generation • Pointer test sequences: None, Single alternating, Regular + Double, Regular + Missing, Double alternating • Display pointer value of receiver side • Graphical display of pointer movements
Overhead	• Generation of section/transport and path overhead bytes • Display of current section/transport and path overhead bytes All overhead can be decoded, including decoded J0, J1, J2 byte.
Through Mode	• Transparent mode • OH overwrite mode: Can be changed SOH (SDH), TOH (SONET)

SDH and SONET Results	
Status	Current information on • Alarms and errors on monitored line • Input level indication for optical signals • Input level indication for electrical signals • Actual bit rate • Frequency deviation
Statistics	User-defined measurement resolution: 1, 2, 5, 10, 15, 30 s, 1, 5, 10, 15, 30 min, 1, 2, 4, 6, 12 h Logged information: Alarms (seconds and ratio), Errors (count or count and ratio), Pointer operations Event log: Major measurement events incl. errors, alarms and pointer operations are logged with 1-second resolution.
Error Performance	G.826/G.828/G.829/M.2100 analysis of received signal based on detected errors and alarms: ES, SES, BBE (not M.2100), UNAV
APS	APS (Automatic Protection Switching) test and analysis • APS switching time is measured. A switching time exceeding the user-defined threshold is highlighted. • Trigger events (user selectable): • SDH: SDH alarms and errors, pattern bit error, APS switchover • SONET: SONET alarms and errors, pattern bit error, APS switchover • Number of switchovers indicated by APS protocol • K1/K2 bytes set and displayed Resolution of APS switching time measurement, SDH • SDH events excluding VC-12 and VC-11 events, LOS (Loss of Signal): 1 µs • VC-12 and VC-11 events: 0.5 ms Resolution of APS switching time measurement, SONET • SONET events excluding VT-1.5 and VT-2 events, LOS (Loss of Signal): 1 µs • VT-1.5 and VT-2 events: 0.5 ms
Round Trip Delay (Propagation Time) Measurement	Resolution: 0.1 µs Measured Max. time: 10.0 s Interval: 0.5, 1, 2, 5, 10 s

Device Testing Specification

Device Test			
Model	MU104014B	MU104015A	MU104011A
Options	MU104014B-012 (Up to 25 GbE) MU104014B-013/014 (40 GbE) MU104014B-015/016 (100 GbE) MU104014B-033 (400 GbE) MU104014B-053/054 (40G OTN) MU104014B-055/056 (100G OTN)	MU104015A-012 (Up to 25 GbE) MU104015A-013 (40 GbE) MU104015A-015 (100 GbE) MU104015A-033 (400 GbE) MU104015A-053 (40G OTN) MU104055A-055 (100G OTN)	MU104011A-012 (Up to 25 GbE) MU104011A-013/014 (40 GbE) MU104011A-015/016 (100 GbE) MU104011A-053/054 (40G OTN) MU104011A-055/056 (100G OTN)
Interface Type	QSFP+, SFP28, QSFP28, QSFP-DD	QSFP+, SFP28, QSFP28, OSFP	QSFP+, SFP28, QSFP28
Bit Rate	25.78 Gbps (25 GigE), 41.25 Gbps (40 GigE), 103.12 Gbps (100 GigE), 43.01 Gbps (OTU3), 44.57 Gbps (OTU3e1), 44.58 Gbps (OTU3e2), 111.80 Gbps (OTU4), 413.0 Gbps (400 GbE)		
Lane Select	1 Lane (SFP28), 4 Lane (QSFP+, QSFP28*), 8 Lane (PAM4) (QSFP-DD, OSFP), 16 Lane (NRZ) (QSFP-DD, OSFP), 20 Lane (QSFP28)		
Timing Source	Internal clock, Received clock, External clock (2-MHz signal, SETS (E1: 2.048 Mbps), BITS (DS1: 1.544 Mbps)), GPS receiver (with G0325A)		
Frequency Offset	±200 ppm, 0.1 ppm step		
Test Pattern	PAM4: PRBS13Q/PRBS31Q, Logic Inverted NRZ: PRBS 9, PRBS 15, PRBS 23, PRBS 31, Logic Inverted		
Error Insertion	Item: Bit error Insertion timing: Single		
Monitor	Signal level: dBm Frequency: Hz, ppm LOS, LSS, CDR lock, Bit error		
Measurement	Bit error, Frequency		

*: The QSFP-DD, and QSFP28 can select test patterns for each lane.

Optical Transceivers Interface List

MU104014B	MU104015A	MU104011A	MU100010A1	MU100011A	Model/ Order No.	Name	Form Factor	100M Ethernet	156M STM-1	614M CPRI	622M STM-4	768M OBSAI	1GFC	1.23G CPRI	1.25G Ethernet	1.54G OBSAI	2GFC	2.46G CPRI	2.488G STM-16	2.67G OTU1	3.07G CPRI OBSAI	4GFC	4.92G CPRI	6.14G CPRI OBSAI	8GFC	9.83G CPRI	9.95G STM-64	10.1G CPRI	10.3G Ethernet	10GFC	10.7G OTU2	11.05G OTU1e	11.09G OTU2e	11.27G OTU1f	11.3G OTU2f	16GFC	25G Ethernet	40G Ethernet	40G OTN	100G Ethernet	100G OTN	200G Ethernet	400G Ethernet
✓	✓	✓	✓	✓	G0332A	100M FX 1310 nm MM SFP	SFP	1310 nm, MM, 2 km																																			
✓	✓	✓	✓	✓	G0319A	Up to 2.7G 1310 nm 15 km SFP	SFP		1310 nm, SM, 15 km																																		
✓	✓	✓	✓	✓	G0320A	Up to 2.7G 1310 nm 40 km SFP	SFP		1310 nm, SM, 40 km																																		
✓	✓	✓	✓	✓	G0321A	Up to 2.7G 1550 nm 80 km SFP	SFP		1550 nm, SM, 80 km																																		
✓	✓	✓	✓	✓	G0328A	1G/2G/4G FC 850 nm SFP	SFP						850 nm, MM, 0.5 km																														
✓	✓	✓	✓	✓	G0322A	1G/2G/4G FC 1310 nm SFP	SFP						1310 nm, SM, 10 km																														
✓	✓	✓	✓	✓	G0323A	1G/2G/4G FC 1550 nm SFP	SFP						1550 nm, SM, 40 km																														
✓	✓	✓	✓	✓	G0315A	10G LR/LW 1310 nm SFP+	SFP+																		1310 nm, SM, 10 km																		
✓	✓	✓	✓	✓	G0316A	10G ER/EW 1550 nm 40 km SFP+	SFP+																		1550 nm, SM, 40 km																		
✓	✓	✓	✓	✓	G0318A	10G ZR/ZW 1550 nm 80 km SFP+	SFP+																		1550 nm, SM, 80 km																		
✓	✓	✓	✓	✓	G0329A	10G LR 1310 nm SFP+	SFP+								1310 nm, SM, 10 km																												
✓	✓	✓	✓	✓	G0356A	8G FC/10G SR 850 nm SFP+	SFP+																	850 nm, MM, 0.3 km																			
✓	✓	✓		✓	G0386A	16GFC SR 850 nm SFP+	SFP+																												850 nm, MM, 0.5 km								
✓	✓	✓		✓	G0387A	16GFC LR 1310 nm SFP+	SFP+																												1310 nm, SM, 10 km								
✓	✓	✓		✓	G0388A	25G SR 850 nm SFP28	SFP28																													850 nm, MM, 0.5 km							
✓	✓	✓		✓	G0389A	25G LR 1310 nm SFP28	SFP28																													1310 nm, SM, 10 km							
✓	✓	✓		✓	G0359A	40G SR4 850 nm QSFP+	QSFP+																														850 nm, MM, 0.1 km						
✓	✓	✓		✓	G0334A	40G LR4 1310 nm QSFP+	QSFP+																														1310 nm, SM, 10 km						
✓	✓	✓		✓	G0366A	100G SR4 850 nm QSFP28	QSFP28																																850 nm, MM, 0.1 km				
✓	✓	✓		✓	G0434A	100G LR4 Dual Rate 1310 nm QSFP28	QSFP28																																1310 nm, SM, 10 km				
✓	✓	✓		✓	G0426A	QSFP28 100GBASE-DR	QSFP28																																1310 nm, SM, 0.5 km				
✓	✓	✓		✓	G0427A	QSFP28 100GBASE-FR1	QSFP28																																1310 nm, SM, 2 km				
✓					G0421A	QSFP56 200GBASE-LR4	QSFP56																																		1310 nm, SM, 10 km	
✓					G0420A	QSFP56 200GBASE-FR4	QSFP56																																		1310 nm, SM, 2 km	
✓					G0402A	QSFP-DD 400GBASE-DR4	QSFP-DD																																			1310 nm, SM, 0.5 km
✓					G0403A	QSFP-DD 400GBASE-FR4	QSFP-DD																																			1310 nm, SM, 2 km
✓					G0404A	QSFP-DD 400GBASE-LR4	QSFP-DD																																			1310 nm, SM, 10 km
	✓				G0405A	OSFP 400GBASE-DR4	OSFP																																			1310 nm, SM, 0.5 km
	✓				G0406A	OSFP 400GBASE-FR4	OSFP																																			1310 nm, SM, 2 km
	✓				G0425A	QSFP 400GBASE-2FR4	OSFP																																			1310 nm, SM, 2 km
✓					G0428A	QSFP-DD 400GBASE-DR4+	QSFP-DD																																			1310 nm, SM, 0.5 km

Optical Transceivers Specification

Model/Order No.	Description (Approx. Distance)	Max. Input Power	Input Sensitivity	Input Wavelength	Output Power	Output Wavelength	Loop Back
G0332A 100M FX 1310 nm MM SFP	100BASE - FX 1310 nm multi mode (2 km)	–14 dBm	–31 dBm	1270 nm to 1600 nm	–20 to –15 dBm	1280 nm to 1380 nm	OK
G0319A Up to 2.7G 1310 nm 15 km SFP	STM-1/4/16 short haul 1310 nm single mode (15 km)	0 dBm	–18 dBm	1270 nm to 1580 nm	–5 to 0 dBm	1260 nm to 1360 nm	OK
G0320A Up to 2.7G 1310 nm 40 km SFP	STM-1/4/16 long haul 1310 nm single mode (40 km)	–9 dBm	–27 dBm	1270 nm to 1580 nm	–2 to +3 dBm	1280 nm to 1335 nm	>12 dB ATT
G0321A Up to 2.7G 1550 nm 80 km SFP	STM-1/4/16 long haul 1550 nm single mode (80 km)	–9 dBm	–28 dBm	1270 nm to 1580 nm	–2 to +3 dBm	1500 nm to 1580 nm	>12 dB ATT
G0328A 1G/2G/4G FC 850 nm SFP	1GFC, 2GFC, 4GFC 850 nm multi mode (0.5 km)	–3 dBm	–15 dBm	830 nm to 860 nm	–9 to 0 dBm	830 nm to 860 nm	>3 dB ATT
G0322A 1G/2G/4G FC 1310 nm SFP	1GFC, 2GFC, 4GFC 1310 nm single mode (10 km)	–3 dBm	–18 dBm	1260 nm to 1360 nm	–8 to 0 dBm	1260 nm to 1360 nm	>3 dB ATT
G0323A 1G/2G/4G FC 1550 nm SFP	1GFC, 2GFC, 4GFC 1550 nm single mode (40 km)	–3 dBm	–18 dBm	1470 nm to 1600 nm	0 to +5 dBm	1510 nm to 1590 nm	>8 dB ATT
G0315A 10G LR/LW 1310 nm SFP+	10GBASE - LR 1310 nm single mode (10 km)	+0.5 dBm	–14.4 dBm	1260 nm to 1565 nm	–6 to –1 dBm	1290 nm to 1330 nm	OK
G0316A 10G ER/EW 1550 nm 40 km SFP+	10GBASE - ER 1550 nm single mode (40 km)	–1 dBm	–15.8 dBm	1260 nm to 1565 nm	–3 to +3 dBm	1530 nm to 1560 nm	>4 dB ATT
G0318A 10G ZR/ZW 1550 nm 80 km SFP+	10GBASE - ER 1550 nm single mode (80 km)	–8 dBm	–22 dBm	1260 nm to 1565 nm	0 to +5 dBm	1525 nm to 1565 nm	>13 dB ATT
G0329A 10G LR 1310 nm SFP+	10GBASE - LR 1310 nm single mode (10 km)	+0.5 dBm	–14 dBm	1260 nm to 1355 nm	–8.2 to +0.5 dBm	1260 nm to 1355 nm	OK
G0356A 8G FC/10G SR 850 nm SFP+	8GFC, 10GFC, 10GBASE - SR 850 nm multi mode (0.3 km)	–1 dBm	–11.1 dBm	840 nm to 860 nm	–8.3 to –1 dBm	840 nm to 860 nm	OK
G0386A 16GFC SR 850 nm SFP+	16GFC 850 nm multi mode (0.035 km)	0 dBm	–10.5 dBm	840 nm to 860 nm	–7.8 dBm to	840 nm to 860 nm	OK
G0387A 16GFC LR 1310 nm SFP+	16GFC 1310 nm single mode (10 km)	+2 dBm	–12 dBm	1295 nm to 1325 nm	–5 to +2 dBm	1295 nm to 1325 nm	OK
G0388A 25G SR 850 nm SFP28	25GBASE - SR 850 nm multi mode (0.1 km)	+2.4 dBm	–10.3 dBm	840 nm to 860 nm	–8.4 to +2.4 dBm	840 nm to 860 nm	OK
G0389A 25G LR 1310 nm SFP28	25GBASE - LR 1310 nm single mode (0.1 km)	+2 dBm	–13.3 dBm	1260 nm to 1350 nm	–7 to +2 dBm	1295 nm to 1325 nm	OK
G0359A 40G SR4 850 nm QSFP+	40GBASE - SR4 850 nm multi mode (0.1 km)	+2.4 dBm (per Lane)	–9.9 dBm	840 nm to 860 nm	–8 to +2.4 dBm	840 nm to 860 nm	OK
G0334A 40G LR4 1310 nm QSFP+	40G Ethernet/OTN 1310 nm single mode (10 km)	+2.3 dBm (per Lane)	–11.5 dBm (per Lane)	1264.5 nm to 1277.5 nm 1284.5 nm to 1297.5 nm 1304.5 nm to 1317.5 nm 1324.5 nm to 1337.5 nm	+8.3 dBm (max.) (Total) –2 to +2.3 dBm (per Lane)	1264.5 nm to 1277.5 nm 1284.5 nm to 1297.5 nm 1304.5 nm to 1317.5 nm 1324.5 nm to 1337.5 nm	OK
G0366A 100G SR4 850 nm QSFP28	100G Ethernet 850 nm multi mode (0.1 km)	+2.4 dBm (per Lane)	–9.9 dBm (per Lane)	840 nm to 860 nm	+8.9 dBm (max.) (Total) –9.1 to +2.4 dBm (per Lane)	840 nm to 860 nm	OK
G0434A 100G LR4 Dual Rate 1310 nm QSFP28	100G Ethernet/OTN 1310 nm single mode (10 km)	+4 dBm (per Lane)	–8.4 dBm (per Lane)	1294.53 nm to 1296.59 nm 1299.02 nm to 1301.09 nm 1303.54 nm to 1305.63 nm 1308.09 nm to 1310.19 nm	+10 dBm (max.) (Total) –0.6 to +4 dBm (per Lane)	1294.53 nm to 1296.59 nm 1299.02 nm to 1301.09 nm 1303.54 nm to 1305.63 nm 1308.09 nm to 1310.19 nm	OK
G0426A QSFP28 100GBASE-DR	100G Ethernet 1310 nm single mode (0.5 km)	+4 dBm (per Lane)	–5.9 dBm	1304.5 nm to 1317.5 nm	–2.9 to +4 dBm	1304.5 nm to 1317.5 nm	OK
G0427A QSFP28 100GBASE-FR1	100G Ethernet 1310 nm single mode (2 km)	+4.5 dBm (per Lane)	–6.4 dBm	1304.5 nm to 1317.5 nm	–2.4 to +4 dBm	1304.5 nm to 1317.5 nm	OK
G0421A QSFP56 200GBASE-LR4	400G Ethernet 1310 nm single mode (10 km)	+5.3 dBm (per Lane)	–9.7 dBm (per Lane)	Unspecified	–1.5 to +3.7 dBm (per Lane)	1294.5 nm to 1296.6 nm 1299.0 nm to 1301.1 nm 1303.5 nm to 1305.6 nm 1308.1 nm to 1310.2 nm	OK
G0420A*1 QSFP56 200GBASE-FR4	200G Ethernet single mode 1310 nm (2 km)	+4.7 dBm (per Lane)	–8.2 dBm (per Lane)	1264.5 nm to 1277.5 nm 1284.5 nm to 1297.5 nm 1304.5 nm to 1317.5 nm 1324.5 nm to 1337.5 nm	–4.2 to +4.7 dBm	1264.5 nm to 1277.5 nm 1284.5 nm to 1297.5 nm 1304.5 nm to 1317.5 nm 1324.5 nm to 1337.5 nm	OK
G0402A QSFP-DD 400GBASE-DR4	400G Ethernet 1310 nm single mode (0.5 km)	+4.2 dBm (per Lane)	–4.4 dBm (per Lane)	1304.5 nm to 1317.5 nm	–2.9 to +4 dBm (per Lane)	1304.5 nm to 1317.5 nm	OK
G0403A QSFP-DD 400GBASE-FR4	400G Ethernet 1310 nm single mode (2 km)	+12.0 dBm (per Lane)	–4.6 dBm (per Lane)	Unspecified	–3.3 to +3.5 dBm (per Lane)	1264.5 nm to 1277.5 nm 1284.5 nm to 1297.5 nm 1304.5 nm to 1317.5 nm 1324.5 nm to 1337.5 nm	OK
G0404A QSFP-DD 400GBASE-LR4	400G Ethernet 1310 nm single mode (10 km)	+10.3 dBm (per Lane)	–6.6 dBm (per Lane)	Unspecified	–1.4 to +4.5 dBm (per Lane)	1264.5 nm to 1277.5 nm 1284.5 nm to 1297.5 nm 1304.5 nm to 1317.5 nm 1324.5 nm to 1337.5 nm	OK
G0405A OSFP 400GBASE-DR4	400G Ethernet 1310 nm single mode (0.5 km)	+4.2 dBm (per Lane)	–4.4 dBm (per Lane)	Unspecified	–2.9 to +4.0 dBm (per Lane)	1304.5 nm to 1317.5 nm	OK
G0406A OSFP 400GBASE-FR4	400G Ethernet 1310 nm single mode (2 km)	+10.3 dBm (per Lane)	–5.0 dBm (per Lane)	Unspecified	–3.3 to +3.5 dBm (per Lane)	1264.5 nm to 1277.5 nm 1284.5 nm to 1297.5 nm 1304.5 nm to 1317.5 nm 1324.5 nm to 1337.5 nm	OK
G0425A*2, *3 OSFP 400GBASE-2FR4	400G Ethernet single mode 1310 nm (2 km)	+4.7 dBm (per Lane)	–8.2 dBm (per Lane)	1264.5 nm to 1277.5 nm 1284.5 nm to 1297.5 nm 1304.5 nm to 1317.5 nm 1324.5 nm to 1337.5 nm	–4.2 to +4.7 dBm (per Lane)	1265.5 nm to 1277.5 nm 1285.5 nm to 1297.5 nm 1305.5 nm to 1317.5 nm 1325.5 nm to 1337.5 nm	OK
G0428A*4 QSFP-DD 400GBASE-DR4+	400G Ethernet single mode 1310 nm (0.5 km)	+3.5 dBm (per Lane)	–6.4 dBm (per Lane)	1304.5 nm to 1317.5 nm	–2.4 to +4 dBm (per Lane)	1304.5 nm to 1317.5 nm	OK

*1: Operating temperature range is +10°C to +40°C
*2: Operating temperature range is +20°C to +40°C
*3: The Ethernet 2×200G N Port BERT option MU104015A-035 is required for use.
*4: The Ethernet 4×100G N Port BERT option MU104014B-034 is required for use.

Ordering Information

Network Master Pro MT1040A

Please specify the model/order number, name and quantity when ordering.
The names listed in the chart below are Order Names. The actual name of the item may differ from the Order Name.

MT1040A Main Unit

Model/Order No.	Name	
MT1040A	Network Master Pro	
Standard Accessories		
MT1040A-006	High Power Supply*1:	1 pc
	Line Cord*2:	1 pc
B0745A	Softcase:	1 pc
B0771A*3	MT1040A Rear Panel kit:	1 pc
G0418A	AC Adaptor:	1 pc
G0423A	Two LiION Batteries:	1 pc
W4039AE	Quick Reference Guide:	1 pc
Z1746A	Stylus:	1 pc
Z2077A	Utilities ROM:	1 pc
Z2082A	Handle:	1 pc

Software Option*4

Model/Order No.	Name
MT1040A-003*5	Connectivity for WLAN/Bluetooth

Option for Two Transport Modules*6

Model/Order No.	Name
MT1040A-020	Activate for 400G Dual/100G Quad Option
Standard Accessories	
G0419A	AC Adapter (400 W)

*1: The presence of the MT1040A-006 option can be recognized at the top right of the front panel. To retrofit to the already shipped item, please contact us.

Without MT1040A-006

With in MT1040A-006

*2: One line cord is attached to the area to shipment.
*3: Composed of B0720A, B0730A, B0731A, B740A and B0741A.
*4: These options can be retrofitted.
The Model/Order No. of retrofit options is "-3**".
Example
"Connectivity for WLAN/Bluetooth MT1040A-003" becomes "Connectivity for WLAN/Bluetooth Retrofit MT1040A-303".
When retrofitting an option, please either specify one of the following media along with the relevant option, or Web download.
Z1849A: DVD-ROM for Retrofit Options
Z1850A: USB Stick for Retrofit Options
*5: WLAN is available for certified countries and regions including USA, Japan and EU countries. Please visit the Anritsu web site for updated information.
*6: Can be added to main unit in which MT1040A-006 already installed. However, battery operation is not possible when using two transponder modules together.

Depending on module combination, it is necessary to order MT1040A-020 Activate for 400G Dual/100G Quad Option.

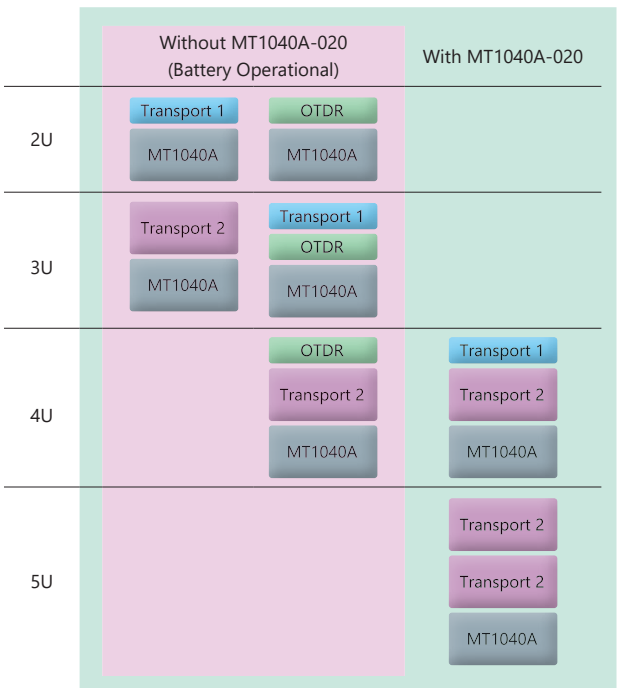

Transport 2
400G (QSFP-DD) Multirate Module MU104014B
400G (OSFP) Multirate Module MU104015A
100G Multirate Module MU104011A

Transport 1
10G Multirate Module MU100010A1
100G Multirate Module MU100011A

OTDR
1310/1550 nm SMF MU100020A
1310/1550/850/1300 nm SMF/MMF MU100021A
1310/1550/1625 nm SMF MU100022A
1310/1550/1650 nm SMF MU100023A

Ordering Information

Network Master Pro MT1040A

Optional Accessories*7

Model/Order No.	Name
B0720A	Rear Panel
B0730A	Screw 2U
B0731A	Screw 3U
B0740A	Screw 4U
B0741A	Screw 5U
B0769A*8	MT1040A Screw Kit
B0772A*9	Soft Case 5U
B0733A	Hard Case
B0773A*9	Hard Case 5U
G0306C*10	Video Inspection Probe
G0324A*11	Battery Charger
G0325A	GPS Receiver
G0382A*10	Autofocus Video Inspection Probe
Z1821A*12	Utilities in USB Stick
Operation Manual (paper)	
W4038AE	MT1040A Transport Module Operation Manual
Optical Transceivers	
G0332A	100M FX 1310 nm MM SFP
G0319A	Up to 2.7G 1310 nm 15 km SFP
G0320A	Up to 2.7G 1310 nm 40 km SFP
G0321A	Up to 2.7G 1550 nm 80 km SFP
G0328A	1G/2G/4G FC 850 nm SFP
G0322A	1G/2G/4G FC 1310 nm SFP
G0323A	1G/2G/4G FC 1550 nm SFP
G0315A	10G LR/LW 1310 nm SFP+
G0316A	10G ER/EW 1550 nm 40 km SFP+
G0318A	10G ZR/ZW 1550 nm 80 km SFP+
G0329A	10G LR 1310 nm SFP+
G0356A	8G FC/10G SR 850 nm SFP+
G0386A	16GFC SR 850 nm SFP+
G0387A	16GFC LR 1310 nm SFP+
G0388A	25G SR 850 nm SFP28
G0389A	25G LR 1310 nm SFP28
G0359A	40G SR4 850 nm QSFP+
G0334A	40G LR4 1310 nm QSFP+
G0366A	100G SR4 850 nm QSFP28
G0434A	100G LR4 Dual Rate 1310 nm QSFP28
G0421A	QSFP56 200GBASE-LR4
G0402A	QSFP-DD 400GBASE-DR4
G0403A	QSFP-DD 400GBASE-FR4
G0404A	QSFP-DD 400GBASE-LR4
G0405A	OSFP 400GBASE-DR4
G0406A	OSFP 400GBASE-FR4
G0426A	QSFP28 100GBASE-DR
G0427A	QSFP28 100GBASE-FR1
G0420A	QSFP56 200GBASE-FR4
G0428A	QSFP-DD 400GBASE-DR4+
G0425A	OSFP 400GBASE-2FR4

Model/Order No.	Name
Cables	
J1571A	Optical Cable SM LC/PC-SC/PC 3 m
J1575A	Optical Cable SM LC/PC-FC/PC 3 m
J1579A	Optical Cable SM LC/PC-LC/PC 3 m
J1581A	Optical Cable MM LC/PC-LC/PC 3 m
J1583A	Optical Attenuator 10 dB LC/PC-LC/PC
J1584A	RJ45 Cable 3 m

Maintenance Service*13

Model/Order No.	Name
MT1040A-ES210	2 Years Extended Warranty Service
MT1040A-ES310	3 Years Extended Warranty Service
MT1040A-ES510	5 Years Extended Warranty Service

*7: Optional Accessories cannot be repaired.
*8: Composed of B0730A, B0731A, B740A and B0741A.
*9: Refer to page 31 for dimensions and external view.
*10: This fiberscope uses the VIP function in the MT1040A Utility menu. Different tip types are used by the G0382A and G0306C. When checking the end face of some SC-APC-F and FC-APC-F adapters, sometimes, there may be a dark region at the screen edge and the end face may not be checked correctly.

G0382A

G0306C

*11: This product must not be exported to China.
*12: Include MT1040A Operation Manual and the Remote Script Manual.
*13: Available for new purchases only.

Ordering Information

Measurement Module

400G (QSFP-DD) Multirate Module MU104014B

Model/Order No.	Name	
MU104014B	400G (QSFP-DD) Multirate Module	
Standard Accessories		
B0768A*1	ESD Box:	1 pc
W4039AE*2	Transport Module Quick Reference Guide:	1 pc

Maintenance Service*3

Model/Order No.	Name
MU104014B-ES210	2 Years Extended Warranty Service
MU104014B-ES310	3 Years Extended Warranty Service
MU104014B-ES510	5 Years Extended Warranty Service

*1: The following combination of module patterns can be installed.

	QSFP-DD/QSFP56/QSFP28/QSFP+	SFP28/SFP+/SFP
Pattern 1	4	0
Pattern 2	3	2
Pattern 3	2	4
Pattern 4	1	6

*2: Accessory only when purchasing MU104014B main unit.
*3: Available for new purchases only.
*4: These options can be retrofitted.
The Model/Order No. of retrofit options is "-3**".
Example
"TCP Throughput MU104014B-020" becomes "TCP Throughput Retrofit MU104014B-320".
When retrofitting an option, please either specify one of the following media along with the relevant option, or Web download.
Z1849A: DVD-ROM for Retrofit Options
Z1850A: USB Stick for Retrofit Options
*5: Requires to MU104014B-012.
*6: Requires that at least one of the following option is installed:
MU104014B-052, MU104014B-053, MU104014B-054, MU104014B-055, MU104014B-056
*7: MU104014B does not have a physical interface of the option.
The option is required for client signal mapped in the OTN.

Protocol Options*4

Model/Order No.	Name
Ethernet/eCPRI/RoE	
MU104014B-006	100G Pluggable Coherent
MU104014B-012	Ethernet up to 25G Dual Channel
MU104014B-013	Ethernet 40G Single Channel
MU104014B-014	Ethernet 40G Dual Channel
MU104014B-015	Ethernet 100G Single Channel
MU104014B-016	Ethernet 100G Dual Channel
MU104014B-020*5	TCP Throughput
MU104014B-031	Ethernet 200G Single Channel
MU104014B-033	Ethernet 400G Single Channel
MU104014B-034	Ethernet 4×100G N Port BERT
MU104014B-036	Open ZR+ Multi Client BERT
OTN	
MU104014B-006	100G Pluggable Coherent
MU104014B-052	OTN up to 10G Dual Channel
MU104014B-053	OTN 40G Single Channel
MU104014B-054	OTN 40G Dual Channel
MU104014B-055	OTN 100G Single Channel
MU104014B-056	OTN 100G Dual Channel
MU104014B-063*6	ODU Multiplexing/Multi Stage
CPRI/OBSAI	
MU104014B-074	CPRI/OBSAI up to 25G Dual Channel
SDH/SONET	
MU104014B-082	SDH/SONET up to 10G Dual Channel
MU104014B-084*7	STM-256/OC-768 Client Signal
Fibre Channel	
MU104014B-092	FC up to 16G Dual Channel

Correspondence Ports by MU104014B Options

Standard (Bit Rate)		Interface	The Number of Correspondence Ports by MU104014B Options															
			012	013	014	015	016	031	033	034/036	052	053	054	055	056	074	082	092
Ethernet	10/100/1000M	RJ45	2 Ports															
	100BASE-FX (125M) 1000BASE-X (1.250G)	SFP	2 Ports															
	10GBASE-XR (10.3125G) 10GBASE-XW (9.953G)	SFP+	2 Ports															
	25GBASE-XX (25.781G)	SFP28	2 Ports															
	40GBASE-XX4 (41.250G)	QSFP+		1 Port	2 Ports													
	100GBASE-XX (103.125G)	QSFP28				1 Port	2 Ports											
	100GBASE-XX4 (103.125G)	QSFP28				1 Port	2 Ports											
	200GBASE-XX4 (212.5G)	QSFP56						1 Port										
	400GBASE-XX4 (425G)	QSFP-DD							1 Port									
	400GBASE-XDR4/DR4+	QSFP-DD								1 Port								
OTN	OTU1 (2.666G)	SFP									2 Ports							
	OTU2 (10.709G) OTU1e (11.049G) OTU2e (11.096G) OTU1f (11.270G) OTU2f (11.318G)	SFP+									2 Ports							
	OTU3 (43.018G) OTU3e1 (44.571G) OTU3e2 (44.583G)	QSFP+										1 Port	2 Ports					
	OTU4 (111.810G)	QSFP28												1 Port	2 Ports			
Mobile X Haul	eCPRI/RoE 10/100/1000M	RJ45	2 Ports															
	eCPRI/RoE 1000BASE-x	SFP	2 Ports															
	eCPRI/RoE 10GBASE-xx	SFP+	2 Ports															
	eCPRI/RoE 25GBASE-xx	SFP28	2 Ports															
	eCPRI/RoE 40GBASE-xx4	QSFP+		1 Port	2 Ports													
	eCPRI/RoE 100GBASE-xx4	QSFP28				1 Port	2 Ports											
	CPRI1 (614.4M) OBSAI 1x (768.0M) CPRI2 (1228.8M) OBSAI 2x (1536.0M) CPRI3 (2457.6M) CPRI4 (3072.0M) OBSAI 4x (3072.0M) CPRI5 (4915.2M)	SFP														2 Ports		
	CPRI6 (6144.0M) OBSAI 8x (6144.0M) CPRI7 (9830.4M) CPRI8 (10137.6M) CPRI9 (12165.12M)	SFP+														2 Ports		
	CPRI10 (24330.24M)	SFP28														2 Ports		
Fibre Channel	1GFC (1.063G) 2GFC (2.125G) 4GFC (4.250G)	SFP																2 Ports
	8GFC (8.500G) 10GFC (10.520G) 16GFC (14.025G)	SFP+																2 Ports
SDH/SONET	STM-1/OC-3 (155.52M) STM-4/OC-12 (622.08M)	SFP															2 Ports	
	STM-64/OC-192 (9.953G)	SFP+															2 Ports	

Ordering Information

Measurement Module

400G (OSFP) Multirate Module MU104015A

Model/Order No.	Name	
MU104015A	400G (OSFP) Multirate Module	
Standard Accessories		
B0768A*1	ESD Box:	1 pc
W4039AE*2	Transport Module Quick Reference Guide:	1 pc

Maintenance Service*3

Model/Order No.	Name
MU104015A-ES210	2 Years Extended Warranty Service
MU104015A-ES310	3 Years Extended Warranty Service
MU104015A-ES510	5 Years Extended Warranty Service

*1: The following combination of module patterns can be installed.

	QSFP-DD/QSFP28/QSFP+	SFP28/SFP+/SFP	OSFP
Pattern 1	4	0	1
Pattern 2	3	2	1
Pattern 3	2	4	1
Pattern 4	1	6	1

*2: Accessory only when purchasing MU104015A main unit.
*3: Available for new purchases only.
*4: These options can be retrofitted.
The Model/Order No. of retrofit options is "-3**".
Example
"TCP Throughput MU104015A-020" becomes "TCP Throughput Retrofit MU104015A-320".
When retrofitting an option, please either specify one of the following media along with the relevant option, or Web download.
Z1849A: DVD-ROM for Retrofit Options
Z1850A: USB Stick for Retrofit Options

*5: Requires to MU104015A-012.
*6: Requires that at least one of the following option is installed: MU104015A-052, MU104015A-053, MU104015A-055
*7: MU104015A does not have a physical interface of the option. The option is required for client signal mapped in the OTN.

Protocol Options*4

Model/Order No.	Name
Ethernet/eCPRI/RoE	
MU104015A-006	100G Pluggable Coherent
MU104015A-012	Ethernet up to 25G Dual Channel
MU104015A-013	Ethernet 40G Single Channel
MU104015A-015	Ethernet 100G Single Channel
MU104015A-020*5	TCP Throughput
MU104015A-033	Ethernet 400G Single Channel
MU104015A-035	Ethernet 2×200G N Port BERT
OTN	
MU104015A-006	100G Pluggable Coherent
MU104015A-052	OTN up to 10G Dual Channel
MU104015A-053	OTN 40G Single Channel
MU104015A-055	OTN 100G Single Channel
MU104015A-063*6	ODU Multiplexing/Multi Stage
CPRI/OBSAI	
MU104015A-074	CPRI/OBSAI up to 25G Dual Channel
SDH/SONET	
MU104015A-082	SDH/SONET up to 10G Dual Channel
MU104015A-084*7	STM-256/OC-768 Client Signal
Fibre Channel	
MU104015A-092	FC up to 16G Dual Channel

Correspondence Ports by MU104015A Options

Standard (Bit Rate)		Interface	The Number of Correspondence Ports by MU104015A Options										
			012	013	015	033	035	052	053	055	074	082	092
Ethernet	10/100/1000M	RJ45	2 Ports										
	100BASE-FX (125M) 1000BASE-X (1.250G)	SFP	2 Ports										
	10GBASE-XR (10.3125G) 10GBASE-XW (9.953G)	SFP+	2 Ports										
	25GBASE-XX (25.781G)	SFP28	2 Ports										
	40GBASE-XX4 (41.250G)	QSFP+		1 Port									
	100GBASE-XX (103.125G)	QSFP28			1 Port								
	100GBASE-XX4 (103.125G)	QSFP28			1 Port								
	400GBASE-XX4 (425G)	OSFP				1 Port							
	400GBASE-2FR4	OSFP					1 Port						
OTN	OTU1 (2.666G)	SFP						2 Ports					
	OTU2 (10.709G) OTU1e (11.049G) OTU2e (11.096G) OTU1f (11.270G) OTU2f (11.318G)	SFP+						2 Ports					
	OTU3 (43.018G) OTU3e1 (44.571G) OTU3e2 (44.583G)	QSFP+							1 Port				
	OTU4 (111.810G)	QSFP28								1 Port			
Mobile X Haul	eCPRI/RoE 10/100/1000M	RJ45	2 Ports										
	eCPRI/RoE 1000BASE-x	SFP	2 Ports										
	eCPRI/RoE 10GBASE-xx	SFP+	2 Ports										
	eCPRI/RoE 25GBASE-xx	SFP28	2 Ports										
	eCPRI/RoE 40GBASE-xx4	QSFP+		1 Port									
	eCPRI/RoE 100GBASE-xx4	QSFP28			1 Port								
	CPRI1 (614.4M) OBSAI 1x (768.0M) CPRI2 (1228.8M) OBSAI 2x (1536.0M) CPRI3 (2457.6M) CPRI4 (3072.0M) OBSAI 4x (3072.0M) CPRI5 (4915.2M)	SFP									2 Ports		
	CPRI6 (6144.0M) OBSAI 8x (6144.0M) CPRI7 (9830.4M) CPRI8 (10137.6M) CPRI9 (12165.12M)	SFP+									2 Ports		
	CPRI10 (24330.24M)	SFP28									2 Ports		
Fibre Channel	1GFC (1.063G) 2GFC (2.125G) 4GFC (4.250G)	SFP											2 Ports
	8GFC (8.500G) 10GFC (10.520G) 16GFC (14.025G)	SFP+											2 Ports
SDH/SONET	STM-1/OC-3 (155.52M) STM-4/OC-12 (622.08M)	SFP										2 Ports	
	STM-64/OC-192 (9.953G)	SFP+										2 Ports	

Ordering Information

Measurement Module

100G Multirate Module MU104011A

Model/Order No.	Name	
MU104011A	100G Multirate Module	
Standard Accessories		
B0768A*1	ESD Box:	1 pc
W4039AE*2	Transport Module Quick Reference Guide:	1 pc

Maintenance Service*3

Model/Order No.	Name
MU104011A-ES210	2 Years Extended Warranty Service
MU104011A-ES310	3 Years Extended Warranty Service
MU104011A-ES510	5 Years Extended Warranty Service

*1: The following combination of module patterns can be installed.

	QSFP-DD/QSFP28/QSFP+	SFP28/SFP+/SFP
Pattern 1	4	0
Pattern 2	3	2
Pattern 3	2	4
Pattern 4	1	6

*2: Accessory only when purchasing MU104011A main unit.
*3: Available for new purchases only.
*4: These options can be retrofitted.
The Model/Order No. of retrofit options is "-3**".
Example
"TCP Throughput MU104011A-020" becomes "TCP Throughput Retrofit MU104011A-320".
When retrofitting an option, please either specify one of the following media along with the relevant option, or Web download.
Z1849A: DVD-ROM for Retrofit Options
Z1850A: USB Stick for Retrofit Options
*5: Requires to MU104011A-012.
*6: Requires that at least one of the following option is installed:
MU104011A-052, MU104011A-053, MU104011A-054, MU104011A-055, MU104011A-056
*7: MU104011A does not have a physical interface of the option.
The option is required for client signal mapped in the OTN.

Protocol Options*4

Model/Order No.	Name
Ethernet/eCPRI/RoE	
MU104011A-006	100G Pluggable Coherent
MU104011A-012	Ethernet up to 25G Dual Channel
MU104011A-013	Ethernet 40G Single Channel
MU104011A-014	Ethernet 40G Dual Channel
MU104011A-015	Ethernet 100G Single Channel
MU104011A-016	Ethernet 100G Dual Channel
MU104011A-020*5	TCP Throughput
OTN	
MU104011A-006	100G Pluggable Coherent
MU104011A-052	OTN up to 10G Dual Channel
MU104011A-053	OTN 40G Single Channel
MU104011A-054	OTN 40G Dual Channel
MU104011A-055	OTN 100G Single Channel
MU104011A-056	OTN 100G Dual Channel
MU104011A-063*6	ODU Multiplexing/Multi Stage
CPRI/OBSAI	
MU104011A-074	CPRI/OBSAI up to 25G Dual Channel
SDH/SONET	
MU104011A-082	SDH/SONET up to 10G Dual Channel
MU104011A-084*7	STM-256/OC-768 Client Signal
Fibre Channel	
MU104011A-092	FC up to 16G Dual Channel

Correspondence Ports by MU104011A Options

Standard (Bit Rate)		Interface	The Number of Correspondence Ports by MU104011A Options												
			012	013	014	015	016	052	053	054	055	056	074	082	092
Ethernet	10/100/1000M	RJ45	2 Ports												
	100BASE-FX (125M) 1000BASE-X (1.250G)	SFP	2 Ports												
	10GBASE-XR (10.3125G) 10GBASE-XW (9.953G)	SFP+	2 Ports												
	25GBASE-XX (25.781G)	SFP28	2 Ports												
	40GBASE-XX4 (41.250G)	QSFP+		1 Port	2 Ports										
	100GBASE-XX (103.125G)	QSFP28				1 Port	2 Ports								
	100GBASE-XX4 (103.125G)	QSFP28				1 Port	2 Ports								
OTN	OTU1 (2.666G)	SFP						2 Ports							
	OTU2 (10.709G) OTU1e (11.049G) OTU2e (11.096G) OTU1f (11.270G) OTU2f (11.318G)	SFP+						2 Ports							
	OTU3 (43.018G) OTU3e1 (44.571G) OTU3e2 (44.583G)	QSFP+							1 Port	2 Ports					
	OTU4 (111.810G)	QSFP28									1 Port	2 Ports			
Mobile X Haul	eCPRI/RoE 10/100/1000M	RJ45	2 Ports												
	eCPRI/RoE 1000BASE-x	SFP	2 Ports												
	eCPRI/RoE 10GBASE-xx	SFP+	2 Ports												
	eCPRI/RoE 25GBASE-xx	SFP28	2 Ports												
	eCPRI/RoE 40GBASE-xx4	QSFP+		1 Port	2 Ports										
	eCPRI/RoE 100GBASE-xx4	QSFP28				1 Port	2 Ports								
	CPRI1 (614.4M) OBSAI 1x (768.0M) CPRI2 (1228.8M) OBSAI 2x (1536.0M) CPRI3 (2457.6M) CPRI4 (3072.0M) OBSAI 4x (3072.0M) CPRI5 (4915.2M)	SFP											2 Ports		
	CPRI6 (6144.0M) OBSAI 8x (6144.0M) CPRI7 (9830.4M) CPRI8 (10137.6M) CPRI9 (12165.12M)	SFP+											2 Ports		
	CPRI10 (24330.24M)	SFP28											2 Ports		
Fibre Channel	1GFC (1.063G) 2GFC (2.125G) 4GFC (4.250G)	SFP													2 Ports
	8GFC (8.500G) 10GFC (10.520G) 16GFC (14.025G)	SFP+													2 Ports
SDH/SONET	STM-1/OC-3 (155.52M) STM-4/OC-12 (622.08M)	SFP												2 Ports	
	STM-64/OC-192 (9.953G)	SFP+												2 Ports	

Ordering Information

Measurement Module

10G Multirate Module MU100010A1

Model/Order No.	Name
MU100010A1	10G Multirate Module
Standard Accessories	
W3935AE	MT1000A Transport Module Quick Reference Guide: 1 pc
B0692A*1	ESD Box (for optical modules)

For details, see the MT1000A data sheet (MT1000A_Data sheet-E-A-1).

Maintenance Service*2

Model/Order No.	Name
MU100010A1-ES210	2 Years Extended Warranty Service
MU100010A1-ES310	3 Years Extended Warranty Service
MU100010A1-ES510	5 Years Extended Warranty Service

*1: Up to four SFP+/SFPs can be stored.
*2: Available for new purchases only.
*3: These options can be retrofitted.
The Model/Order No. of retrofit options is "-3**".
Example
"Up to 2.7G Dual Channel MU100010A-001" becomes "Up to 2.7G Dual Channel Retrofit MU100010A-301".
When retrofitting an option, please either specify one of the following media along with the relevant option, or Web download.
Z1849A: DVD-ROM for Retrofit Options
Z1850A: USB Stick for Retrofit Options
*4: Includes OTN (OTU1), Ethernet (10 Mbps, 100 Mbps, 1 Gbps), SDH up to STM-16, and SONET up to OC-48.
*5: Requires that at least one of the following options is installed:
MU100010A-001, MU100010A-011, MU100010A-012
*6: Requires that at least one of the following options is installed:
MU100010A-001, MU100010A-051, MU100010A-052

Module Options*3

Model/Order No.	Name
Low Rate	
MU100010A-001*4	Up to 2.7G Dual Channel
Ethernet	
MU100010A-011	Ethernet 10G Single Channel
MU100010A-012	Ethernet 10G Dual Channel
MU100010A-020*5	TCP Throughput
OTN	
MU100010A-051	OTN 10G Single Channel
MU100010A-052	OTN 10G Dual Channel
MU100010A-061*6	ODU Multiplexing
MU100010A-062*6	ODU Flex
CPRI/OBSAI	
MU100010A-071	CPRI/OBSAI Up to 5G Dual Channel
MU100010A-072	CPRI/OBSAI 6G to 10G Single Channel
MU100010A-073	CPRI/OBSAI 6G to 10G Dual Channel
Fibre Channel	
MU100010A-002	FC 1G 2G 4G Dual Channel
MU100010A-091	FC 8G 10G Single Channel
MU100010A-092	FC 8G 10G Dual Channel
SDH/SONET	
MU100010A-081	STM-64 OC-192 Single Channel
MU100010A-082	STM-64 OC-192 Dual Channel

Correspondence Ports by MU100010A1 Options

Standard (Bit Rate)		Interface	The Number Of Correspondence Ports by MU100010A1 Options												
			001	002	011	012	051	052	071	072	073	081	082	091	092
Ethernet	10/100/1000M (Electrical)	RJ45	2 Port												
	100BASE-FX (125M) 1000BASE-X (1.25G)	SFP	2 Port												
	10GBASE-XR (10.3125G) 10GBASE-XW (9.953G)	SFP+			1 Port	2 Port									
OTN	OTU1 (2.666G)	SFP	2 Port												
	OTU2 (10.709G) OTU1e (11.049G) OTU2e (11.096G) OTU1f (11.270G) OTU2f (11.318G)	SFP+					1 Port	2 Port							
Mobile X Haul	eCPRI/RoE 10/100/1000M (Electrical)	RJ45	2 Port												
	eCPRI/RoE 1000BASE-x	SFP	2 Port												
	eCPRI/RoE 10GBASE-x	SFP+			1 Port	2 Port									
	CPRI Option1 (614.4M) OBSAI 1x (768.0M) CPRI Option2 (1228.8M) OBSAI 2x (1536.0M) CPRI Option3 (2457.6M) CPRI Option4 (3072.0M) OBSAI 4x (3072.0M) CPRI Option5 (4915.2M)	SFP							2 Port						
	CPRI Option6 (6144.0M) OBSAI 8x (6144.0M) CPRI Option7 (9830.4M) CPRI Option8 (10137.6M)	SFP+								1 Port	2 Port				
Fibre Channel	1GFC (1.063G) 2GFC (2.125G) 4GFC (4.250G)	SFP		2 Port											
	8GFC (8.500G) 10GFC (10.520G)	SFP+												1 Port	2 Port
SDH/ SONET	STM-1/OC-3 (155.52M) STM-4/OC-12 (622.08M)	SFP	2 Port												
	STM-64/OC-192 (9.953G)	SFP+										1 Port	2 Port		

Ordering Information

Measurement Module

100G Multirate Module MU100011A

Model/Order No.	Name	
MU100011A*1	100G Multirate Module	
Standard Accessories		
W3935AE	MT1000A Transport Module Quick Reference Guide:	1 pc
B0763A*2	ESD Box (for Optical modules):	1 pc

For details, see the MT1000A data sheet (MT1000A_Data sheet-E-A-1).

Maintenance Service*3

Model/Order No.	Name
MU100011A-ES210	2 Years Extended Warranty Service
MU100011A-ES310	3 Years Extended Warranty Service
MU100011A-ES510	5 Years Extended Warranty Service

*1: MT1000A-006 is required for MU100011A.
*2: One CFP4 plus either up to two QSFP28s or up to four SFP/SFP+s can be stored.
*3: Available for new purchases only.
*4: These options can be retrofitted.
The Model/Order No. of retrofit options is "-3**".
Example
"Up to 10G Single Channel MU100011A-001" becomes "Up to 10G Single Channel Retrofit MU100011A-301".
When retrofitting an option, please either specify one of the following media along with the relevant option, or Web download.
Z1849A: DVD-ROM for Retrofit Options
Z1850A: USB Stick for Retrofit Options
*5: Only one of these option can be installed.
Included OTN(OTU1, OTU1e, OTU1f, OTU2, OTU2e, OTU2f), Ethernet up to 10 Gbps, SDH up to STM-64 and SONET up to OC-192.
*6: MU100011A-023 is required for 100G FEC control.
*7: FEC selectable On/Off.
*8: Requires that at least one of the following option is installed:
MU100011A-001, MU100011A-003
*9: In addition to the MT1000A-005, at least one of the following options is required: MU100011A-001, MU100011A-003, MU100011A-017
*10: Requires to MU100011A-015
*11: Requires that at least one of the following option is installed:
MU100011A-001, MU100011A-003, MU100011A-053, MU100011A-055
*12: MU100011A does not have a physical interface of the option.
In combination with MU100011A-053, can be used as a client signal by OTN.

Module Options*4

Model/Order No.	Name
Standard	
MU100011A-001*5	Up to 10G Single Channel
MU100011A-003*5	Up to 10G Dual Channel
Ethernet	
MU100011A-006	100G Pluggable Coherent
MU100011A-013*6	Ethernet 40G Single Channel
MU100011A-015*6	Ethernet 100G Single Channel
MU100011A-017*7	Ethernet 25G Single Channel
MU100011A-020*8	TCP Throughput
MU100011A-021*9	SyncE Wander
MU100011A-023*10	RS-FEC for 100GBASE-SR4
MU100011A-024*10	RS-FEC (544,514) for 100GBASE-xR
OTN	
MU100011A-006	100G Pluggable Coherent
MU100011A-053	OTN 40G Single Channel
MU100011A-055	OTN 100G Single Channel
MU100011A-062*11	ODU Flex
MU100011A-063*11	ODU Multiplexing/Multi Stage
Fibre Channel	
MU100011A-004	Up to 10G FC Single Channel
MU100011A-005	Up to 10G FC Dual Channel
MU100011A-091	FC 16G Single Channel
eCPRI/RoE/CPRI/OBSAI	
MU100011A-071	CPRI/OBSAI Up to 10G Single Channel
MU100011A-072	CPRI/OBSAI Up to 10G Dual Channel
MU100011A-073	CPRI 12/25G Single Channel
MU100011A-074	CPRI 12/25G Dual Channel
MU100011A-075*7	eCPRI/RoE 25G Dual Channel
SDH/SONET	
MU100011A-083*12	STM-256/OC-768 Client Signal

Correspondence Ports by MU100011A Options

Standard (Bit Rate)		Interface	The Number Of Correspondence Ports by MU100011A Options														
			001	003	013	015	017	053	055	004	005	091	071	072	073	074	075
Ethernet	10/100/1000M (Electrical)	RJ45	1 Port	2 Port													
	100BASE-FX (125M) 1000BASE-X (1.25G)	SFP	1 Port	2 Port													
	10GBASE-XR (10.3125G) 10GBASE-XW (9.953G)	SFP+	1 Port	2 Port													
	25GBASE-XX (25.781G)	SFP28					1 Port										
	40GBASE-XX4 (41.250G)	QSFP+			1 Port												
	100GBASE-XX (103.125G)	QSFP28				1 Port											
	100GBASE-XX4 (103.125G)	CFP4, QSFP28				1 Port											
OTN	OTU1 (2.666G)	SFP	1 Port	2 Port													
	OTU2 (10.709G) OTU1e (11.049G) OTU2e (11.096G) OTU1f (11.270G) OTU2f (11.318G)	SFP+	1 Port	2 Port													
	OTU3 (43.018G) OTU3e1 (44.571G) OTU3e2 (44.583G)	QSFP+						1 Port									
	OTU4 (111.810G)	CFP4, QSFP28							1 Port								
Mobile X Haul	eCPRI/RoE 10/100/1000M (Electrical)	RJ45	1 Port	2 Port													
	eCPRI/RoE 1000BASE-x	SFP	1 Port	2 Port													
	eCPRI/RoE 10GBASE-xx	SFP+	1 Port	2 Port													
	eCPRI/RoE 25GBASE-xx	SFP28					1 Port										2 Port
	eCPRI/RoE 40GBASE-xx	QSFP+			1 Port												
	eCPRI/RoE 100GBASE-xx	CFP4, QSFP28				1 Port											
	CPRI Option1 (614.4M) OBSAI 1x (768.0M) CPRI Option2 (1228.8M) OBSAI 2x (1536.0M) CPRI Option3 (2457.6M) CPRI Option4 (3072.0M) OBSAI 4x (3072.0M) CPRI Option5 (4915.2M)	SFP											1 Port	2 Port			
	CPRI Option6 (6144.0M) OBSAI 8x (6144.0M) CPRI Option7 (9830.4M) CPRI Option8 (10137.6M)	SFP+											1 Port	2 Port			
	CPRI Option9 (12165.12M)	SFP+													1 Port	2 Port	
	CPRI Option10 (24330.24M)	SFP28													1 Port	2 Port	
Fibre Channel	1GFC (1.063G) 2GFC (2.125G) 4GFC (4.250G)	SFP								1 Port	2 Port						
	8GFC (8.500G) 10GFC (10.520G)	SFP+								1 Port	2 Port						
	16GFC (14.025G)	SFP+										1 Port					
SDH/ SONET	STM-1/OC-3 (155.52M) STM-4/OC-12 (622.08M)	SFP	1 Port	2 Port													
	STM-64/OC-192 (9.953G)	SFP+	1 Port	2 Port													

Ordering Information

OTDR Module

OTDR Module MU100020A/MU100021A/MU100022A/MU100023A

1) Select OTDR Module

Select the OTDR module configuration according to the procedures in items 1-1) and 1-2) below.

1-1) Select Base Module

Select one of the following models.

Model/Order No.*1	Name	
MU100020A	OTDR Module (1310/1550 nm SMF)	
MU100021A	OTDR Module (1310/1550/850/1300 nm SMF/MMF)	
MU100022A	OTDR Module (1310/1550/1625 nm SMF)	
MU100023A	OTDR Module (1310/1550/1650 nm SMF)	
	Standard Accessories	
J1693A	Universal Connector 2.5 mm for OPM:	1 pc
J1694A	Universal Connector 1.25 mm for OPM:	1 pc
W3811AE	Quick Reference Guide:	1 pc

1-2) Select Dynamic Range Type

Select one of the following models.

Model/Order No.*1	Name
MU100020A-020	Standard Dynamic Range (1310/1550 nm: 39/37.5 dB)
MU100020A-021	Enhanced Dynamic Range (1310/1550 nm: 42/41 dB)
MU100020A-022	High-Performance Dynamic Range (1310/1550 nm: 46/46 dB)
MU100021A-021	Enhanced Dynamic Range (1310/1550/850/1300 nm: 42/41/29/28 dB)
MU100022A-022	High-Performance Dynamic Range (1310/1550/1625 nm: 46/46/44 dB)
MU100023A-021	Enhanced Dynamic Range (1310/1550 nm: 42/41 dB, 1650 nm: 35 dB)

For details, see the MT1000A OTDR Brochure (MT1000A_OTDR-E-A-1).

*1: Factory installed option only and cannot be retrofitted.

2) Select Connector Types

Select a module polish type and connector adapter according to the procedures in items 2-1) and 2-2).

2-1) Polish Types

Specify one connector polish type.

Model/Order No.*1	Name
MU100020A-010	UPC Polish
MU100020A-011*2	APC Polish
MU100021A-010	UPC Polish
MU100021A-011*2	APC Polish
MU100022A-010	UPC Polish
MU100022A-011*2	APC Polish
MU100023A-010	UPC Polish
MU100023A-011*2	APC Polish

*2: Used by SM port. An APC connector cannot be specified for the MM port, which uses a UPC connector.

2-2) Select Connector Adapter type

Specify one type of connector adapter.

Model/Order No.	Name
	For UPC Polish with Option 010
MU100020A-037*3	FC Connector
MU100020A-040*3	SC Connector
MU100021A-037*4	FC Connector
MU100021A-040*4	SC Connector
MU100022A-037*3	FC Connector
MU100022A-040*3	SC Connector
MU100023A-037*7	FC Connector
MU100023A-040*7	SC Connector
	For APC Polish with Option 011
MU100020A-025*3	FC Connector key width 2.0 mm
MU100020A-026*3	SC Connector
MU100021A-025*5	FC Connector key width 2.0 mm
MU100021A-026*6	SC Connector
MU100022A-025*3	FC Connector key width 2.0 mm
MU100022A-026*3	SC Connector
MU100023A-025*7	FC Connector key width 2.0 mm
MU100023A-026*7	SC Connector

*3: One specified connector adapter supplied free of charge.
*4: One each of same connector adapter for SM port and MM port supplied free of charge. Cannot specify different connector adapters for each port.
*5: One connector adapter for SM port supplied free of charge.
One connector adapter equivalent to Option 37 (FC/UPC) for MM port supplied free of charge.
*6: One specified connector adapter for SM port supplied free of charge.
One connector adapter equivalent to Option 40 (SC/UPC) for MM port supplied free of charge.
*7: One each of same connector adapter for SM port (1310/1550 nm) and SM port (1650 nm) port supplied free of charge.
Cannot specify different connector adapters for each port.

Ordering Information

OTDR Module

4) VFL

Model/Order No.*1	Name
MU100020A-002*8	Visual Fault Locator
MU100021A-002*8	Visual Fault Locator
MU100022A-002*8	Visual Fault Locator
MU100023A-002*8	Visual Fault Locator

*8: Installs dedicated port for visible light source; 2.5 mm universal light receiver type (connector adapter not required). J1335A required to connect 1.25 mm fiber.

5) Replacement Adapters

Model/Order No.	MU100020A MU100022A MU100023A*9	MU100021A	
For UPC Polish			
	SM port	SM port	MM port
J0617B (FC/UPC)	✓	✓	✓
J0619B (SC/UPC)	✓	✓	✓
For APC Polish			
	SM port	SM port	MM port
J0739A (FC/APC)	✓	✓	N/A
J1697A (SC/APC)	✓	✓	N/A

*9: There are two SM ports — one for 1310/1550 nm, and another for 1650 nm.

6) Select Accessories & Replacement Items

Model/Order No.	Name	Description
For MU100020A/MU100021A/MU100022A/MU100023A OTDR Modules		
W3810AE	MT1000A MU100020A Network Master Pro Operation Manual	Printed Matter
J1335A	MU/LC Connector Adapter	Converts ferrule connector diameter from 2.5 mm → 1.25 mm for visible light source (Option 002)
J1530A	SC Plug-in Converter (UPC(P)-APC(J))	SC/UPC → SC/APC Adapter
J1531A	SC Plug-in Converter (APC(P)-UPC(J))	SC/APC → SC/UPC Adapter
J1532A	FC Plug-in Converter (UPC(P)-APC(J))	FC/UPC → FC/APC Adapter
J1533A	FC Plug-in Converter (APC(P)-UPC(J))	FC/APC → FC/UPC Adapter
J1534A	LC-SC Plug-in Converter (for SM, SC(P)-LC(J))	SC/UPC → LC/UPC Adapter for SM fiber
J1535A	LC-SC Plug-in Converter (for MM, SC(P)-LC(J))	SC/UPC → LC/UPC Adapter for MM fiber
NETWORKS*10	PC Emulation Software for Data Analysis and Reporting	
J1579A	Optical cable SM LC/PC to LC/PC 3 m	
J1581A	Optical cable MM LC/PC to LC/PC 3 meter	
J1575A	Optical cable SM LC/PC to FC/PC 3 m	
J1571A	Optical cable SM LC/PC to SC/PC 3 m	

*10: Reduce the software display resolution to 1920 × 1080 or less.

7) Maintenance Service

Model/Order No.	Description
MU100020A-ES210	2 Years Extended Warranty Service
MU100020A-ES310	3 Years Extended Warranty Service
MU100020A-ES510	5 Years Extended Warranty Service
MU100021A-ES210	2 Years Extended Warranty Service
MU100021A-ES310	3 Years Extended Warranty Service
MU100021A-ES510	5 Years Extended Warranty Service
MU100022A-ES210	2 Years Extended Warranty Service
MU100022A-ES310	3 Years Extended Warranty Service
MU100022A-ES510	5 Years Extended Warranty Service
MU100023A-ES210	2 Years Extended Warranty Service
MU100023A-ES310	3 Years Extended Warranty Service
MU100023A-ES510	5 Years Extended Warranty Service

Ordering Information

Accessories for MT1040A Dual-Module Configuration

The size of the MT1040A depends on the module configuration. Choose the appropriate case.

Module Combination	Mounting Screws	Soft Case		Hard Case	
		B0745A	B0772A	B0733A	B0773A
Short (2U)	B0730A			345 (W) × 238 (H) × 480 (D) mm, 3.5 kg	495 (W) × 338 (H) × 663 (D) mm, 12.3 kg
Standard Transport (Type 2) (3U)	B0731A				
+ Transport (Type 1) or OTDR Module (4U)	B0740A				
Two Transport (type 2) Modules (5U)	B0741A				

MT1040A

B0733A

B0773A

Size of Each Hard Case for MT1040A

Note

Note

Anritsu Advancing beyond

Specifications are subject to change without notice.

• **United States**
Anritsu Americas Sales Company
490 Jarvis Drive, Morgan Hill, CA 95037-2809, U.S.A.
Phone: (408)-778-2000

• **Canada**
Anritsu Electronics Ltd.
Americas Sales and Support
490 Jarvis Drive, Morgan Hill, CA 95037-2809, U.S.A.
Phone: +1-800-Anritsu (1-800-267-4878)

• **Brazil**
Anritsu Eletrônica Ltda.
Praça Amadeu Amaral, 27 - 1 Andar
01327-010 - Bela Vista - Sao Paulo - SP, Brazil
Phone: +55-11-3283-2511

• **Mexico**
Anritsu Company, S.A. de C.V.
Blvd Miguel de Cervantes Saavedra #169 Piso 1, Col. Granada
Mexico, Ciudad de Mexico, 11520, MEXICO
Phone: +52-55-4169-7104

• **United Kingdom**
Anritsu EMEA Limited
900 Capability Green, Luton, Bedfordshire, LU1 3LU, U.K.
Phone: +44-1582-433200

• **France**
Anritsu SA
12 avenue du Québec, Immeuble Goyave,
91140 VILLEBON SUR YVETTE, France
Phone: +33-1-60-92-15-50

• **Germany**
Anritsu GmbH
Nemetschek Haus, Konrad-Zuse-Platz 1,
81829 München, Germany
Phone: +49-89-442308-0

• **Italy**
Anritsu S.R.L.
Spaces Eur Arte, Viale dell'Arte 25, 00144 Roma, Italy
Phone: +39-6-509-9711

• **Sweden**
Anritsu AB
Kistagången 20 B, 2 tr, 164 40 Kista, Sweden
Phone: +46-8-534-707-00

• **Finland**
Anritsu AB
Technopolis Aviapolis, Teknobulevardi 3-5 (D208.5.),
FI-01530 Vantaa, Finland
Phone: +358-20-741-8100

• **Denmark**
Anritsu A/S
c/o Regus Winghouse, Ørestads Boulevard 73, 4th floor,
2300 Copenhagen S, Denmark
Phone: +45-7211-2200

• **Spain**
Anritsu EMEA GmbH
Representation Office in Spain
Calle Manzanares 4, Primera planta, 28005 Madrid, Spain
Phone: +34-91-572-6761

• **Austria**
Anritsu EMEA GmbH
Am Belvedere 10, A-1100 Vienna, Austria
Phone: +43-(0)1-717-28-710

• **United Arab Emirates**
Anritsu A/S
Office No. 164, Building 17, Dubai Internet City
P. O. Box – 501901, Dubai, United Arab Emirates
Phone: +971 (0) 4-2424919

• **India**
ANRITSU INDIA PRIVATE LIMITED
6th Floor, Indiqube ETA, No.38/4, Adjacent to EMC2,
Doddanekundi, Outer Ring Road, Bengaluru – 560048, India
Phone: +91-80-6728-1300
Fax: +91-80-6728-1301

• **Singapore**
ANRITSU PTE LTD
1 Jalan Kilang Timor, #07-04/06 Pacific Tech Centre
Singapore 159303
Phone: +65-6282-2400

• **Vietnam**
ANRITSU COMPANY LIMITED
16th Floor, Peakview Tower, 36 Hoang Cau Street, O Cho Dua Ward,
Hanoi, Vietnam
Phone: +84-24-3201-2730
Fax: +84-24-3201-2740

• **P.R. China (Shanghai)**
Anritsu (China) Co., Ltd.
Room 2301-2303, Tower A, New Caohejing International Business
Center No. 391 Gui Ping Road, Shanghai, 200233, P.R. China
Phone: +86-21-6237-0898

• **P.R. China (Hong Kong)**
ANRITSU COMPANY LIMITED
Unit 1302, 13th Floor, New East Ocean Center,
No.9 Science Museum Road, TsimShaTsui East,
Kowloon, Hong Kong
Phone: +852-2301-4980

• **Japan**
ANRITSU CORPORATION
8-5, Tamura-cho, Atsugi-shi, Kanagawa, 243-0016 Japan
Phone: +81-46-296-1244
Fax: +81-46-296-1239

• **Korea**
Anritsu Corporation Limited
8F, A TOWER, 20, Gwacheondaero 7-gil, Gwacheon-si,
Gyeonggi-do, 13840, Republic of Korea
Phone: +82-2-6259-7300

• **Australia**
Anritsu Pty Ltd
Unit 20, 21-35 Ricketts Road, Mount Waverley, Victoria 3149, Australia
Phone: +61-3-9558-8177

• **Taiwan**
ANRITSU COMPANY, INC.
7F, No. 316, Sec. 1, NeiHu Rd., Taipei 114, Taiwan
Phone: +886-2-8751-1816

2512

Printed in Japan 06/APR/2026 ddcm/CDT Catalog No. MT1040A_Data sheet-E-A-1-(13.00)