Anritsu Advancing beyond

Field Master™

Handheld RF Spectrum Analyzer

MS2070A

9 kHz to 3 GHz

Introduction

The Field Master MS2070A spectrum analyzer is the latest field portable RF spectrum analyzer from Anritsu. Building on over 20 years of experience in developing handheld instruments, the MS2070A offers an unmatched combination of affordable features and performance in a standard spectrum analyzer. Designed for field technicians who need a reliable instrument with specifications and tools necessary to perform routine spectrum monitoring and interference hunting in the crowded sub 3 GHz spectrum, all delivered in a robust case including a 10.1-inches multi-touch screen to ease the setup and results analysis.

Instrument Highlights

- Modulation Bandwidth: 20 MHz standard
- Dynamic Range: > 105 dB Typical
- DANL: –167 dBm Typical with Preamp On
- Resolution Bandwidth (RBW): 1 Hz up to 5 MHz
- Level Accuracy: ±1 dB
- Sweep Speed 32 GHz/s

Capabilities and Functional Highlights

- AM/FM Audio Demodulation
- Carrier-to-Interference
- Field Strength
- Occupied Bandwidth
- Channel Power
- Channel Scanner
- Adjacent Channel Power
- Spectral Emission Mask
- Signal Strength and RSSI
- Coverage Mapping
- Trace Recording/Playback
- Interference Finder
- Spectrogram Display
- IP52 Environmental Protection in Soft Case
- Built-in PDF Report Generator
- High Accuracy Power Meter Measurements
- Multi-language Support
- 10.1-inches Multi-touch Screen
- USB 3.0 Ports
- Optional Wi-Fi Interface
- Ethernet and USBTMC Remote Control Interface

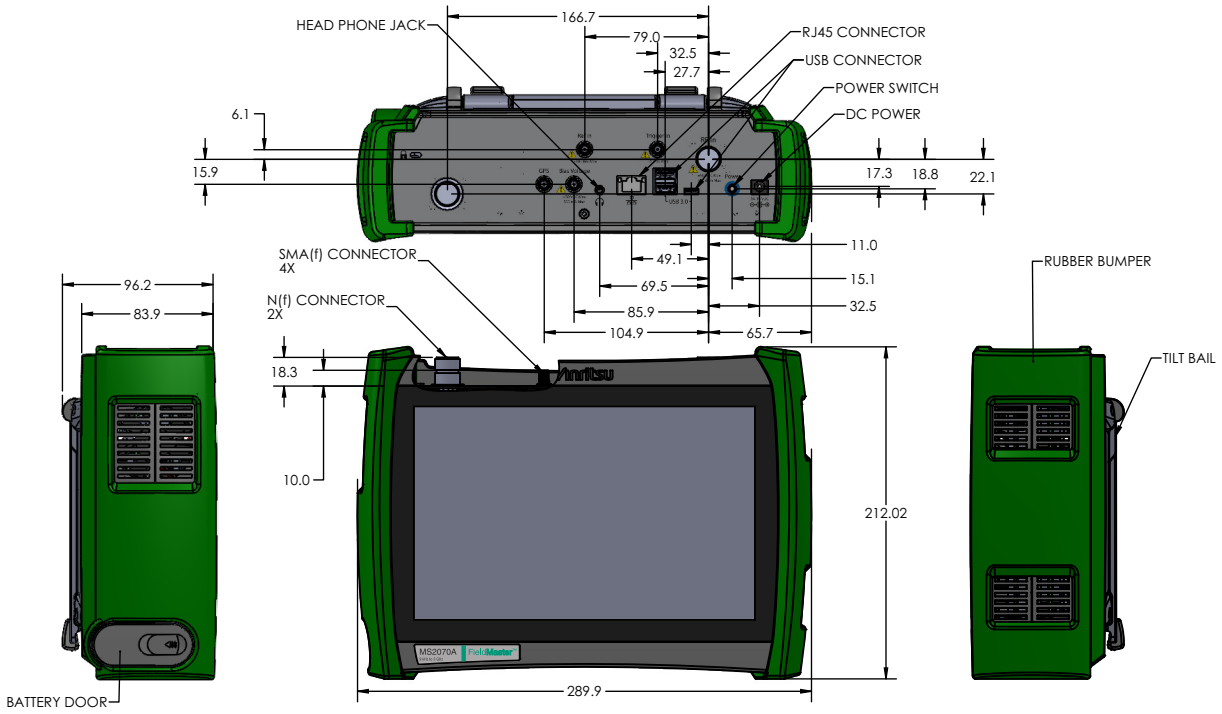

MS2070A

All dimensions in mm

Table of Contents

Introduction 2
Definitions. 3
Spectrum Analyzer Performance 4
Wi-Fi Connectivity (Option 5) 5
Spectrum Analyzer Features 6
Secure Data (Option 7) 7
Preamplifier (Option 8) 7
Secure Communication (Option 17) 7
High Accuracy Power Meter (Option 19) 8
Interference Finder and AM/FM Audio Demodulation (Option 24) 8
Channel Scanner (Option 27) 9
GNSS Receiver (Option 31) 9
Coverage Mapping (Option 431) 9
AM/FM Modulation Measurement (Option 509). 10
General Specifications 11
Anritsu Remote Tool 12
Programmable Remote Control 12
Ordering Information – Instrument Options 13
Standard Accessories 14
Related Manuals 14
USB Power Sensors 15
Optional Accessories. 16

Definitions

Specifications	All specifications and characteristics apply under the following conditions, unless stated otherwise: • After 10 minutes of warm-up time, where the instrument is left in the ON state • When using the internal 10 MHz reference signal
Typical Performance	Typical specifications are not tested and are not warranted. They are generally representative of characteristic performance.
Nominal Performance	Nominal specifications are design parameters; they are not tested and are not warranted.
Calibration Cycle	Calibration is within the recommended 12 month period
	All specifications in this data sheet are subject to change without notice. For the most current data sheet, please visit the Anritsu web site: www.anritsu.com

Spectrum Analyzer Performance

Frequency (usable to 0 Hz)

MS2070A-0703	9 kHz to 3 GHz (Option 703)
Tuning Resolution	1 Hz
Span	10 Hz to max frequency, Zero Span
Frequency Reference	Internal, GNSS, External
Internal Frequency Reference	Standard TCXO: Aging: ±1.0 x 10^{-6} per year Accuracy: ±2.8 x 10^{-7} (-10 °C ± 55°C) plus aging (see "GNSS Receiver (Option 31)" for improved accuracy)
External Frequency Reference	10 MHz, -10 dBm to +10 dBm

Bandwidth

Analysis Bandwidth	20 MHz (standard)
Resolution Bandwidth (RBW)	1 Hz to 3 MHz, 1 Hz to 5 MHz in zero span
RBW Selectivity	4:1 nominal (–60 dB / –3 dB)
Video Bandwidth (VBW)	1 Hz to 3 MHz, 1 Hz to 5 MHz in zero span
CISPR Bandwidth	Resolution bandwidth when using Quasi-Peak marker function: 200 Hz, 9 kHz, and 120 kHz
VBW/Average Type	Linear/Log

Sweep

Manual Sweep	Maximum sweep time is 3600 s (1 hour)
Sweep Points	10 to 10,001 (1001 in zero span)
Sweep Rate (non-zero span)	32 GHz/s

Zero Span

Sweep Time	60 ns to 3600 s in zero span
Sweep Time Accuracy	±2 % in zero span

Spectral Purity – SSB Phase Noise

Offset from 1 GHz RF Input	Maximum	Typical
10 kHz	–93 dBc/Hz	–94 dBc/Hz
100 kHz	–95 dBc/Hz	–97 dBc/Hz
1 MHz	–120 dBc/Hz	–123 dBc/Hz

Spurs (Preamplifier (Option 8)

Residual Spurious	< –105 dBm (RF input terminated, 0 dB input attenuation, > 10 MHz, preamp On) < –94 dBm (RF input terminated, 0 dB input attenuation, 10 MHz to 3 GHz, preamp Off)
Input-Related Spurious	< –70 dBc (0 dB attenuation, –30 dBm input)
Exceptions, typical	< –68 dBc @ 700 MHz to 3300 MHz with 2086 MHz Input < –65 dBc @ 2*(F1 –1484) MHz, where 3140 MHz < F1 < 3580 MHz < –68 dBc @ F1 – 2086 MHz where 2100 MHz < F1 < 4970 MHz
Local-Oscillator Related Spurious	< –60 dBc nominal for offsets > 1 MHz

Amplitude Ranges

Dynamic Range	105 dB typical at 1 GHz, 2/3 (TOI-DANL) in 1 Hz RBW
Measurement Range	DANL to +30 dBm
Display Range	1 to 15 dB/div in 1 dB steps, ten divisions displayed
Reference Level Range	–150 dBm to +30 dBm
Attenuator Resolution	0 to 50 dB, 5 dB steps
Reference Level Offset	99.9 dB external loss to 99.9 dB external gain
Maximum Continuous Input	+30 dBm CW, ±50 VDC (≥ 10 dB attenuation) +23 dBm CW, ±50 VDC (< 10 dB attenuation) +10 dBm CW, ±50 VDC (preamp On)
Damage Level	5 W (+37 dBm)

Amplitude Accuracy (≥ 10 dB attenuation, –50 dBm ≤ input signal ≤ –10 dBm, 1 kHz RBW, auto-coupled, excluding effects of VSWR, noise, and spurs)

	20 °C to 30 °C (after 30 minute warm-up)		–10 °C to 55 °C (after 60 minute warm-up)	
Frequency Range	Maximum	Typical	Maximum	Typical
9 kHz to 3 GHz[a]	±1.00 dB	±0.5 dB	±2.0 dB	±0.5 dB

a. Values below 100 kHz are with preamp off

Displayed Average Noise Level (DANL) (RMS detection, VBW/Avg type = Log, reference level = –20 dBm for preamp Off and –50 dBm for preamp On, auto attenuation On, normalized to 1 Hz RBW). Preamplifier (Option 8).

	Preamp = On		Preamp = Off	
Frequency Range	Maximum	Typical	Maximum	Typical
100 kHz to 10 MHz		–139 dBm		–118 dBm
10 MHz to 2 GHz	–161 dBm	–167 dBm	–142 dBm	–150 dBm
> 2 GHz to 3 GHz	–160 dBm	–165 dBm	–140 dBm	–146 dBm

Third-Order Intercept (TOI) (–20 dBm tones 100 kHz apart, 0 dB input attenuation, preamp Off, reference level –20 dBm)

1 GHz	+7 dBm, Typical
2 GHz	+11 dBm, Typical
3 GHz	+14 dBm, Typical

Second Harmonic Distortion (0 dB input attenuation –30 dBm input, preamp Off)

50 MHz	–65 dBc maximum
> 50 MHz to 1.5 GHz	–70 dBc, typical

VSWR (≥ 10 dB input attenuation)

9 kHz to 2.0 GHz	1.5:1 typical
2 GHz to 3.0 GHz	1.8:1 typical

Wi-Fi Connectivity (Option 5)

Wireless Standard 802.11a/b/g/n/ac

Spectrum Analyzer Features

Smart Measurements

Field Strength	Measures field strength (dBm/m^2, dBW/m^2, dBV/m, dBmV/m, dBµV/m, V/m, W/m^2, W/cm^2, A/m) with antenna gain vs. frequency plot
Channel Power	Measures the total power and power spectral density within a specified bandwidth
Occupied Bandwidth	Measures the 99 % to 1 % power channel of a signal
Adjacent Channel Power	Measures the power in two upper and two lower adjacent channels
Spectral Emission Mask	Standards based limits for wireless emissions
Carrier-to-Interference (C/I)	Measures the ratio of power (dB) in an RF carrier to the interference power in the channel
Burst Power Average	Measures average power between two time markers in zero span
Total Harmonic Distortion (THD)	Measures THD of seven harmonics relative to fundamental frequency

Setup Parameters

Frequency	Center/Start/Stop, Frequency Step, Frequency Offset, Gestures
Span	Span (Manual/Increment 1, 2, 5), Full Span, Last Span, Zero Span
Amplitude	Reference Level (Manual/Auto and Offset), Scale/Division, Y-Axis Unit (dBm, dBW, dBV, dBmV, dBµV, dBA, V, W, A), Attenuation (Auto/Manual), Attenuation Level, Impedance (50 Ω, 75 Ω, other), Custom IMP Loss, Field Strength, Gestures
Bandwidth	RBW/VBW (Auto/Manual), VBW Type (Linear/Logarithmic), RBW:VBW Ratio, SPAN:RBW Ratio
Sweep	Continuous on/off, Restart, Sweep Once, Sweep to N, Auto/Manual Time, Points

Spectrogram

Number of Lines	142
Trace Time/Position Cursor	Up to six Cursors (display historical trace data by trace position or time)
Cursor State	Active, Hold/View, Blank
Color Setup	Color Scale Top/Bottom Range, Reference Hue, Preset Setup

Trace Functions

Traces	Up to six Traces
Trace Type	Clear/Write, Average (2 to 1000), Max Hold, Min Hold, Rolling Average, Rolling Max Hold, Rolling Min Hold
Trace Math	T1-T2, T2-T1 (when T5 and T6 are selected)
Trace Mode	Active, Hold/View, Blank
Detector Type per Trace	Peak, RMS/Avg, Negative, Sample, Normal
Trace Normalize	On/Off (defines a 0 dB reference trace)
Trace Record	Record live samples with manual tagging to internal or external storage
Trace Playback	Play recorded samples from internal or external storage; set playback interval
CSV Logging	Record live or playback traces in CSV format for post processing

Trigger Functions (zero span only)

Sources	Free Run, GNSS/Internal, Video, External
Settings	Level, Delay, Holdoff, Periodic, Slope (Rising/Falling), Hysteresis

Marker Functions

Markers	Up to 12 Markers
Marker Measurements	Amplitude, Frequency (swept spectrum display) Amplitude, Time (Zero Span)
Marker Mode	Normal, Delta, Fixed
Delta Marker	Relative to any Normal or Fixed Marker
Marker Function	None, Noise, Frequency Counter (1 Hz, 100 mHz, 10 mHz, 1 mHz resolutions), Quasi-Peak (per CISPR 16-1-1)
Marker Trace	Assign Marker to any Trace
Peak Search	Peak Search, Next Peak, Next Peak Left, Next Peak Right, Next Point Left, Next Point Right
Peak Search Setup	Peak Threshold, Peak Excursion
Marker	Mkr → Center, Mkr → Ref Level
Marker Table	Up to 12 Markers Showing Marker, Mode, Function, Trace, Frequency, Amplitude, Delta Frequency & Offset

Limit Line Functions

Limit Setup	Upper/Lower, Limit On/Off, Limit Alarm On/Off, Set Default Limit Line, Frequency Mode (Absolute/Relative) Amplitude Mode (Absolute/Relative)
Limit Line Edit	Frequency, Amplitude, Add Point, Add Vertical, Add Gap, Delete Point, Next Point Left/Right
Limit Line Move	Center, X-Offset (Hz), Left, Right, Y-Offset, Up, Down, To Marker 1, Marker 1 Offset (dB)
Limit Line Envelope	Select Envelope (Upper/Lower), Set Envelope, Envelope Points (2-41), Amplitude Offset, Shape (Square/Slope)

Secure Data (Option 7)

For highly secure data handling requirements, this software option prevents the storing of measurement setup or data information onto any internal file storage location. Instead, setup and measurement information is stored ONLY to the external USB memory location. A simple factory preset prepares the Field Master for transportation while the USB memory remains behind in the secure environment. The Field Master cannot be switched between secure and non-secure operation by the user once configured for secure data operation. With this option enabled, the user can also choose to blank the frequency, amplitude and bandwidth values displayed on the screen by turning on Secure Display toggle included in Advanced settings of the instrument.

Preamplifier (Option 8)

Frequency Range	9 kHz to 3 GHz

Secure Communication (Option 17)

When connecting the instrument to a network, Option 17 creates a secure tunnel. Some ports will be closed, and data gets encrypted as shown in the table below. Security certificates can be loaded onto the instrument to establish a secure connection. Remote access to the MS2070A ports can be password protected. The USBTMC connection interface does not work on instruments installed with Secure Communication Option 17.

Compatible Software: Anritsu Remote and Report Tools (ARRT)
MX280007A Mobile InterferenceHunter™ (MIH)

PORT	SERVICE	DEFAULT STATE	WITH OPTION 17
21 (tcp)	ftp	Open	Closed
80 (tcp)	http	Open	Closed
111 (tcp)	rpcbind	Open	Open
443 (tcp)	https	Open	Open
8001 (tcp)	vcom-tunnel	Open	Closed
8002 (tcp)	vcom-tunnel	Closed	Open (encrypted)
9001 (tcp)	tor-orport	Open	Closed
9002 (tcp)	dynamid	Open	Closed
9003 (tcp)	tor-orport	Closed	Open (encrypted)
9004 (tcp)	dynamid	Closed	Open (encrypted)
24001 (tcp)	med-fsp-rx	Open	Closed
24002 (tcp)	med-fsp-rx	Closed	Open (encrypted)
111 (udp)	rpcbind	Open	Open
123 (udp)	ntp	Open	Open
5353 (udp)	Zeroconf	Open/Filtered	Open

High Accuracy Power Meter (Option 19) (requires external USB power sensor, sold separately)

Inline Peak Power Sensor

Amplitude	External Gain/Loss, Forward/Reverse Relative Power (on/off), Maximum/Minimum Display, Units (dBm, W)
Sweep	Measurement Mode (Single, Continuous), Run/Hold, Single
Setup	Averages (1-100), Max Hold (on/off), Summary Table on/off, Modulation Type (None, GSM GPRS EDGE, WCDMA HSPA Single/Multi Carrier, ISDB T, CDMA IS95 2000 EVDO), Forward Measurement (Crest Factor, Burst Average Manual, Peak Envelope Power, Burst Average Auto, CCDF), Reverse Measurement (Reverse Average, Reflection Coefficient, Return Loss, Standing Wave Ratio), Duty Cycle, Video BW, CCDF Threshold, Sensor Info
Zero/Cal	Zero, Cal Frequency, Signal Standard,
Limits	Enabled on/off, Forward Upper/Lower, Reverse Upper/Lower, Alarm On/Off

Power Sensor

Amplitude	External Gain/Loss, Relative Power On/Off, Units (dBm, W), Maximum/Minimum Display
Sweep	Measurement Mode (Single, Continuous), Run/Hold, Single
Setup	Averages (1-100), Max Hold (on/off), Aperture, Sensor Info
Zero/Cal	Zero, Cal Frequency, Signal Standard,
Limits	Enabled on/off, Upper, Lower, Alarm On/Off

Power Sensor Model	MA24103A/105A	MA24106A	MA24108A/18A/26A	MA24208A/18A	MA24330A/40A/50A
Description	Inline Peak Power Sensor	High Accuracy RF Power Sensor	Microwave USB Power Sensor	Microwave Universal USB Power Sensor	Microwave CW USB Power Sensor
Frequency Range	25 MHz to 1 GHz 350 MHz to 4 GHz	50 MHz to 6 GHz	10 MHz to 8/18/26 GHz	10 MHz to 8/18 GHz	10 MHz to 33/40/50 GHz
Connector	Type N(f), 50 Ω	Type N(m), 50 Ω	Type N(m), 50 Ω (8/18 GHz) Type K(m), 50 Ω (26 GHz)	Type N(m), 50 Ω	Type K(m), 50 Ω (33/40 GHz) Type V(m), 50 Ω (50 GHz)
Dynamic Range	+3 dBm to +51.76 dBm (2 mW to 150 W)	–40 dBm to +23 dBm (0.1 µW to 200 mW)	–40 dBm to +20 dBm (0.1 µW to 100 mW)	–60 dBm to +20 dBm (1 nW to 100 mW)	–70 dBm to +20 dBm (0.1 nW to 100 mW)
Measurand	True-RMS, Burst Average Power	True-RMS	True-RMS, Slot Power, Burst Average Power	True-RMS, Slot Power, Burst Average Power	Average Power
Measurement Uncertainty	± 0.17 dB[a]	± 0.16 dB[b]	± 0.18 dB[c]	± 0.17 dB[d]	± 0.17 dB[e]
Data sheet (for complete specifications)	11410-00621	11410-00424	11410-00504	11410-00841	11410-00906

Notes:
a. Expanded uncertainty with K=2 for power measurements of a CW signal greater than +20 dBm with a matched load. Measurement results referenced to the input side of the sensor.
b. Total RSS measurement uncertainty (0 °C to 50 °C) for power measurements of a CW signal greater than – 20 dBm with zero mismatch errors.
c. Expanded uncertainty with K=2 for power measurements of a CW signal greater than –20 dBm with zero mismatch errors.
d. Power uncertainty expressed with two sigma confidence level for CW measurement after zero operation. Includes calibration factor and linearity over temperature uncertainties, but not the effects of mismatch, zero set and drift, or noise.
e. Includes linearity over temperature uncertainties, but not the effects of calibration factor, mismatch, zero set and drift, and noise.

Interference Finder and AM/FM Audio Demodulation (Option 24) (requires GNSS Receiver (Option 31))

The interference finder option is available in normal spectrum analyzer mode. This option requires a directional antenna sold separately)

Supported Measurements

Interference Finding Audio Tone
AM/FM Audio Demodulation
Interference Triangulation Mapping (recommended InterferenceHunter™ MA2700A)
Interference Polar Plot (requires InterferenceHunter MA2700A)

Interference Finder Audio Tone

Setup	Integration Bandwidth, Power Limit, MAX/MIN Level, Volume
Audio Tone	20 Hz to 20 kHz (Tone pitch and volume changes with detected signal strength)

AM/FM Audio Demodulation

Demod Frequency	Full range of instrument
Audio Demodulation	AM, USB, LSB, Wideband FM, Narrowband FM
Markers	Selectable demodulation marker (1 to 12)
Audio	Toggle On/Off
Volume	Set 0% to 100%
Record Audio	Record audio up to 100,000 s (dependent on instrument memory)
Squelch Level	–120 dBm to +30 dBm (set RF level threshold to break audio silence, supports log and linear units)

Interference Map Triangulation (recommended for use with InterferenceHunter MA2700A handle and requires directional antenna, sold separately. If not using MA2700A, Option 31, GNSS and antenna are required)

Triangulation	Triangulates on source of interference location using eCompass and digital maps displayed on screen
Manual Setup	Manual entry of compass bearing values

Interference Polar Plot (requires InterferenceHunter MA2700A handle and directional antenna, sold separately)

Signal Strength Radar Plot	360° radar plot of single frequency signal strength centered on current GNSS location

Channel Scanner (Option 27)

Number of Channels	1 to 60
Frequency Range	9 kHz to 4/6 GHz
Frequency Accuracy	$\pm 2.8 \times 10^{-7}$
Measurement Range	–160 dBm to +30 dBm
Amplitude	Reference Level (Manual/Auto and Offset), Scale/Division, Preamp (On/Off), Attenuation (Auto/Manual), Y-Axis Unit (dBm, dBW, dBV, dBmV, dBµV, dBA, V, W, A), Attenuation Level, Impedance (50 Ω, 75 Ω, other), Custom IMP Loss, Field Strength
Scan	Continuous (on/off), Scan Once
Measure	View: Bar Chart, Strip Chart, Mapping, Start Measure, Select Points (on/off), Clear Points, Compare Measure on/off
Setup Parameters	Bar Chart/Strip Chart: Add Channels Signal Standard: Start Channel, Channel Step Size, Channel Span, Channel Count, Index, Dwell Time, Upper Limit, Lower Limit Frequency Range: Channel Name, Start Frequency, Channel Spacing, Channel Span, Channel Count, Index, Dwell Time, Upper Limit, Lower Limit Custom: Channel Name, Center Frequency, Channel Span, Index, Dwell Time, Upper Limit, Lower Limit Mapping: Add Channels, Map Type (Outdoor, Indoor), Map Mode (Channel Power), Repeat Type (Time, Distance), Time (1 to 60 s max), Distance, Distance Unit (Meters, Feet), Best Channel on/off, Selected Channel (0 to 59), Mapping Device (with Option 7 only), Color Setup: Excellent, Very Good, Good, Fair, Poor

GNSS Receiver (Option 31) (Requires GNSS antenna, sold separately)

Supported Satellite Systems	GNSS (includes combinations of GPS, GLONASS, Galileo, BeiDou)
Setup	On/Off, Antenna Voltage 3.3 V/5.0 V, GPS/GNSS Info
GNSS Time/Location Indicator	UTC Time, Latitude, Longitude, and Altitude on display (UTC Time and Altitude on GNSS Info display)
High Frequency Accuracy	$< \pm 2.5 \times 10^{-8}$ with GNSS On, three minutes after satellite lock in selected mode (GNSS antenna connected)
Connector	SMA(f)

Coverage Mapping (Option 431)

Spectrum Analyzer Measurements

Channel Power	Plots channel power in dBm, dBW, dBV, dBmV, dBµV, dBA, V, W, A
Spectral Density	Plots spectral density in dBm/Hz, dBW/Hz, dBV/Hz, dBmV/Hz, dBµV/Hz, dBA/Hz, V/Hz, W/Hz, A/Hz
RSSI	Plots received signal strength indicator in dBm, dBW, dBV, dBmV, dBµV, dBA, V, W, A
Field Strength	Plots field strength in dBm/m^2, dBW/m^2, dBV/m, dBmV/m, dBµV/m, dBA/m, V/m, W/m^2, W/cm^2, A/m^2
Power Flux Density	Plots power flux density in dBm/m^2/Hz, dBW/m^2/Hz, dBV/m/Hz, dBmV/m/Hz, dBµV/m/Hz, dBA/m/Hz, V/m/Hz, W/m^2/Hz, W/cm^2/Hz, A/m/Hz

Spectrum Analyzer Measurement Setup

Map Type	Indoor: PNG or JPEG Outdoor: OpenStreetMap® (downloaded direct from Internet to instrument or using external PC software)
Frequency (Excluding RSSI)	Center/Start/Stop, Frequency Step, Frequency Offset
Span (Excluding RSSI)	Span (Manual/Increment 1, 2, 5), Full Span, Last Span, Zero Span
Amplitude	Reference Level (Manual/Auto and Offset), Scale/Division, Y-Axis Unit, Preamp (on/off), Attenuation (Auto/Manual), Field Strength, Impedance (50 Ω, 75 Ω, other), Custom IMP Loss
Bandwidth	RBW/VBW (Auto/Manual), VBW Type (Linear/Logarithmic), RBW:VBW Ratio, SPAN:RBW Ratio
Mapping Colors	Customizable Amplitude Range Thresholds for Each Color Blue (Excellent), Green (Very Good), Yellow (Good), Orange (Fair), Pink (Poor)
Point Distance or Time Setup	Repeat Type: Time (1 s to 60 s) or Distance (1 m to 10,000 m), Distance Units: Meters or Feet
Save	Indoor: Setup, Measurement File (fmspa), PNG Outdoor: Setup, KML Points, PNG, Tab Delimited
Recall	Setup, KML Points File, Measurement File (fmspa)

AM/FM Modulation Measurement (Option 509)

AM Measurements

AM Depth	0% to 100%, ±2% accuracy, typical
AM Bandwidth	20 kHz
AM Standards	Standard AM, Upper/Lower Sideband suppressed carrier
SINAD	0 to 60 dB, nominal based on 1kHz modulating tone
THD	-60 dB, using up to 10 harmonics of 1 kHz modulating tone
Demodulated AM Spectrum	Frequency Scale, 0 to 24 kHz
Audio Time Domain	5 s or auto zoomed
Graphs	Audio Spectrum (Log AM depth percentage vs frequency), RF Spectrum Audio Time Domain (Linear AM depth percentage vs time), Audio Results
Audio Results	Signal Power (dBm), Carrier Frequency, RMS Depth, (Peak-to-peak)/2 Depth, Peak Positive/Peak Negative Depth, SINAD (dB), Upper/Lower AM Depth, THD (dB)
Setup	Demodulation Frequency, Demodulation Marker (on/off), Marker Tracked (1 to 12), Zoomed Time Graph (on/off), Modulation (AM, USB, LSB), Audio (on/off), Volume (on/off), Record Duration (1 to 100000 S), Record, Squelch Level (-120 to 30 dBm)

FM Measurements

FM Bandwidth	96 kHz (wide)
FM Deviation	Up to 75 kHz with 2% accuracy, ±1 kHz typical
SINAD	0 to 60 dB, nominal based on 1 kHz modulating tone
THD	-75 to 0 dB, using up to 10 harmonics of 1 kHz modulating tone
Demodulated FM Spectrum	Wideband: 96 kHz full span, 20 kHz zoomed Narrowband: 25 kHz, 24 kHz (audio spectrum) 12.5 kHz, 14 kHz (audio spectrum) 6.25 kHz, 6 kHz (audio spectrum)
Audio Time Domain	5 s or auto zoomed
Graphs	Audio Spectrum (Log FM deviation vs frequency), RF Spectrum Audio Time Domain (Linear FM deviation vs time), Audio Results
Audio Results	Signal Power (Hz), Carrier Frequency, Upper/Lower Deviation, RMS FM deviation, (Peak-to-peak)/2 Deviation, SINAD, Total Harmonic Distortion (THD), Left/Right RDS deviation, Pilot Deviation
Setup	Demodulation Frequency, Demodulation Marker (on/off), Marker Tracked (1 to 12), Zoomed Audio Graph (on/off), Zoomed Time Graph (on/off), Modulation (FM Narrowband (6.25, 12.5, 25 kHz), FM Wideband), Audio (on/off), Volume (on/off), Record Duration (1 to 100000 S), Record, Squelch Level (-120 to 30 dBm)

General Specifications

Setup Parameters

Display	Brightness adjustment, Auto screen dimming shutoff timer (on/off), Color schemes (Default, Light, Black on White, Night Vision), Shortcuts (Hide Shortcuts On/Off)
Sound	System Volume (Mute All On/Off), Defaults
Date and Time	Date and Time settings (Automatic, Manual), Time Zone settings, Time synced to Internet/GNSS
Language	English, Spanish, Chinese-simplified, Japanese, French, Korean
Screenshot	Capture Region (Graphs Only, Entire Application), Color (Printable, Standard), Annotations (Header, Footer) File naming (Automatic Timestamp, Manual), Directory
Options	Installed Options, Available Options, Install Options from web, Enable options using file (USB)), Save Config
GNSS (GPS)	See "GNSS Receiver (Option 31)" on page 9
Ethernet	Ethernet (IP4 & IP6 formats), Type (DHCP, Static IP)
WLAN (Wi-Fi)	2x2 MIMO, 802.11 a/b/g/n/ac, On/Off, Auto detect wireless networks
Port Setup	Bias Voltage (On/Off), Voltage, Info
Maps	Tile Usage
Advanced	RF Safe Mode on/off, SCPI Errors on/off, Share Center Frequency on/off, Secure Display on/off, Remote Lock on/off, Set Remote Password, Add Custom Certificate, Save Public Key and Certificate Information
Instrument Memory	8 GB of which nominally 1.5 GB is allocated to the operating system. Available memory to users is nominally 6.5 GB. Available memory is accessed by user saving of: screen images, trace files, setup files, digital maps, IQ captures, audio files and report files.

File Menu

Save/Recall	Measurement Setup, Screenshot Image (.PNG), Export Measurement data (Text, CSV), Location
File Management	Save, Copy, Paste, Delete, Create New Folder, Set File Name and File Type, Rename

Diagnostics Menu

Event Log (Export File), Self Test, Service (Enable Service Mode)

Tools Menu

Web, IQ Streaming, Map Tool, PDF Reports

Report Generator

PDF Reports	Creates detailed measurement reports on the instrument
Report Contents	Free form text fields to identify and locate the site of measurements, company logo image instrument screen captures and site photographs
Report Format	PDF and HTML

Connectors

RF In	Type N(f), 50 Ω
GPS	SMA(f)
External Power	5.5 mm barrel connector, 14 to 16 VDC
Ethernet Interface	RJ45 connector for Ethernet 10/100/1000 Mbps (connect to PC or LAN for remote access)
USB Interface	Two USB 3 Type A (supports file transfer) One USB 3 Type C (USBTMC)
Headset Jack	3.5 mm headset jack
External Reference In	10 MHz, SMA(f), 50 Ω, maximum input +10 dBm
External Trigger In	SMA(f), 50 Ω, TTL-compatible levels
DC Bias Voltage	SMA(f), Setup: On/Off, Voltage, Trip Reset Voltage Range: +1 V to +34 V, Resolution: 0.1 V

Display and Keyboard

Display	10.1-inches capacitive touchscreen, 1280 x 800 resolution
Shortcuts	Maximum of five user-configured measurement setup shortcuts
Screen Strength	IK08 (protected against a five joule impact)
Keyboard	Common alphanumeric/symbolic keys and customizable EZ keyboard
Touch Gestures	Pinch to zoom x (span), Drag in x (center frequency, markers, limit line points)
Titlebar	System menu, application menu, camera icon, USB eject icon, software update icon, local host icon, lock status (touchscreen), theme icon, notification icon, Wi-Fi icon, GNSS (GPS) icon, battery percentage icon, time and date

Battery

Type	Li-Ion
Internal Battery	3 hours operation, typical
Charging Temperature Limit	0 °C to +45 °C, relative humidity ≤ 80 %
Nominal Capacity	8940 mAh
Nominal Energy	97 Wh
External Battery Accessory	Six hours operation, typical (with an accessory battery contained in soft carrying case)

Regulatory Compliance		
	European Union	EMC 2014/30/EU, EN 61326-1:2021; CISPR 11/EN 55011, IEC/EN 61000-4-2/3/4/5/6/8/11 Low Voltage Directive 2014/35/EU; Safety EN 61010-1:2010; RoHS Directive 2011/65/EU & 2015/863
	United Kingdom	EMC SI 2016/1091; BS EN 55011 & BS 61000-4-2/3/4/5/6/8/11; Consumer Protection (Safety) SI 2016/1101; BS EN 61010-1:2010; Environmental Protection SI 2012/3032; 2011/65/EU & 2015/863
	Australia and New Zealand	RCM AS/NZS 4417:2012
	South Korea	KCC-R-R-A2J-1003
	Canada	ICES-3(A)/NMB-3(A)
	United States	FCC ID: SQG-60SIPT
Environmental		MIL-PRF-28800F Class 2
	Operating Temperature Range	–10°C to 55°C
	Storage Temperature Range	–51°C to 71°C
	Maximum Relative Humidity	95 % RH at 30°C, non-condensing
	Vibration, Sinusoidal	5 Hz to 55 Hz
	Vibration, Random	10 Hz to 500 Hz
	Half Sine Shock	30 g_n
	Altitude	4600 meters, operating and non-operating
	Explosive Atmosphere	MIL-PRF-28800F Section 4.5.6.3 MIL-STD-810G, Method 511.5, Procedure 1
	Ingress Protection Rating	Complies with IP52 when installed in soft carrying case
Warranty	Duration	Standard three-year warranty One-year warranty on battery
Size and Weight	Size	290 mm x 212 mm x 96 mm (11.4 in x 8.3 in x 3.7 in)
	Weight	MS2070A-0703: 3.8 kg (8.39 lb)

Anritsu Remote Tool

	Free MS2070A Anritsu Remote and Report Tools software download from www.anritsu.com
Functionality	Full instrument graphical user interface control from a PC with simulated hardware support for on-screen measurement analysis Anritsu Remote Tool software compatible with Windows® 10 and 11; 32 or 64 bit operating systems
Interfaces	Ethernet, WLAN (Option 5)

Programmable Remote Control

Functionality	Full instrument programming control (except power On/Off) via Ethernet and Wi-Fi (Option 5), and USBTMC See the instrument Programming Manual for details
Programming Language	Standard Commands for Programmable Instruments (SCPI)
Interfaces	Ethernet, WLAN (Option 5), USBTMC (USB C port)

Ordering Information – Instrument Options

Part Number	Description
MS2070A	Field Master Spectrum Analyzer
Options	
MS2070A-0703	9 kHz to 3 GHz Spectrum Analyzer (required)
MS2070A-0005	Wi-Fi Connectivity
MS2070A-0006	Remove Wi-Fi and Bluetooth
MS2070A-0007	Secure Data
MS2070A-0008	Preamplifier
MS2070A-0017	Secure Communication
MS2070A-0019*	High Accuracy Power Meter (Requires USB power sensor, sold separately)
MS2070A-0024*	Interference Finder (Requires Option 8) (Option 31and directional antenna recommended, sold separately)
MS2070A-0027*	Channel Scanner
MS2070A-0031*	GNSS Receiver (Requires GNSS antenna, sold separately)
MS2070A-0400*	Enable Vision Monitor
MS2070A-0407*	Enable Vision High-Speed Port Scanner
MS2070A-0431*	Coverage Mapping (Channel Power and RSSI only) (Requires Option 8 and 31)
MS2070A-0509*	AM/FM Modulation Measurements
MS2070A-0703-0097	Accredited Calibration to ISO17025 and ANSI/NCSL Z540-1
MS2070A-0703-0098	Standard Calibration to ISO17025 and ANSI/NCSL Z540-1
MS2070A-0703-0099	Premium Calibration to ISO17025 and ANSI/NCSL Z540-1 plus test data
*** Time-Limited Options**	Options marked with an asterisk are offered as a 90-day time limited option by ordering as a -9xxx series option. For example, MS2070A-9431 is the 90-day time limited option for coverage mapping Measurements. The option start time begins when the user first activates the option.
Supported PC Software	
MX280001A	Vision™ Monitor
MX280007A	Mobile InterferenceHunter™
ARRT	Anritsu Remote and Report Tools

Standard Accessories (included with instrument)

Accessory	Description
	2000-2071-R MS2070A Soft Case
	Certificate of Calibration and Conformance
	633-83 Li-ion Battery, 97 Wh
	2000-2156-R SMA(m) to BNC(f) Adapter (qty 3)

Accessory	Description
	2000-1371-R Ethernet Cable, 2 m
	2000-1859-R USB Cable, USB 3.0 Type-A to Type-C, 1 m
	806-442-R SMA(m) to BNC(m) cable, 1 m
	40-204-R AC/DC Power Adapter

Related Manuals (available at www.anritsu.com)

Part Number	Description
10100-00069	Product Information, Compliance, and Safety
10580-00483	Field Master User Guide
10580-00495	Field Master Programming Manual
10580-00447	Spectrum Analyzer Measurement Guide Interference Finder (Option 24, requires Option 31) Coverage Mapping (Option 431) AM/FM Modulation Measurement (Option 509)
10580-00492	High Accuracy Power Meter Measurement Guide (Option 19)
10580-00504	Channel Scanner Measurement Guide (Option 27)

USB Power Sensors (for complete ordering information, see the respective data sheets of each sensor)

Accessory	Description
	MA24330A Microwave CW USB Power Sensor, 10 MHz to 33 GHz, +20 dBm
	MA24340A Microwave CW USB Power Sensor, 10 MHz to 40 GHz, +20 dBm
	MA24350A Microwave CW USB Power Sensor, 10 MHz to 50 GHz, +20 dBm
	MA24208A Microwave Universal USB Power Sensor, 10 MHz to 8 GHz, +20 dBm to –60 dBm
	MA24218A Microwave Universal USB Power Sensor, 10 MHz to 18 GHz, +20 dBm to –60 dBm
	MA24106A High Accuracy RF Power Sensor, 50 MHz to 6 GHz, +23 dBm to –40 dBm

Accessory	Description
	MA24108A Microwave USB Power Sensor, 10 MHz to 8 GHz, +20 dBm to –40 dBm
	MA24118A Microwave USB Power Sensor, 10 MHz to 18 GHz, +20 dBm to –40 dBm
	MA24126A Microwave USB Power Sensor, 10 MHz to 26 GHz, +20 dBm to –40 dBm
	MA25100A RF Power Indicator
	MA24103A/105A Inline Peak Power Sensor 25 MHz to 1 GHz, +3 dBm to +51.76 dBm 350 MHz to 4 GHz, +3 dBm to +51.76 dBm

USB Extender Kit (for use with external USB sensors; requires Cat 5e extension cable, sold separately)

Accessory	Description
	2000-1900-R USB 2.0 Active 100 meter Extender (with Type A power cord for USA, Japan, North America, Central America and Caribbean)
	2100-28-R Cat 5e extension cable for use with USB Extender (22.5 m)

Accessory	Description
	2000-1717-R USB 1.1 Passive 40 m Extender (Not compatible with sensors MA24208A, MA24218A, MA24330A, MA24340A, MA24350A; must use active extenders with these sensors).

Optional Accessories

Miscellaneous Accessories

Accessory	Description
	67135 Anritsu Backpack (for Handheld Instrument and PC)
	760-271-R Transit Case (For Portable Directional Antennas and Port Extender P/N 2000-1777-R, 2000-1778-R, 2000-1779-R and 2000-1798-R) (Case can contain all loop antennas at once
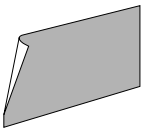	2000-2048-R Screen Protector
	MA2700A Handheld Interference Hunter (For full specifications, refer to the MA2700A Technical Data Sheet 11410-00692)
	2000-2149-R EMI Near-Field Probe Kit, 100 kHz to 3 GHz Requires 1092-172-R Type N to BNC Adapter and 1 m BNC to BNC Cable (sold separately) (For full specifications, refer to the Near-Field Probe Set User Guide 10580-00347)
	2000-2146-R Bias tee, 2.5 MHz to 6 GHz
	2000-2150-R Field and Site Master Rack Mount Kit
	01-201 Calibrated torque wrench, for K, V, SMA, 3.5 mm, 2.4 mm connectors

Accessory	Description
	760-243-R Large Transit Case with Wheels and Handle 56 cm x 45.5 cm x 26.5 cm (22.07" x 17.92" x 10.42")
	2000-1374-R External Dual Charger for Li-Ion Batteries
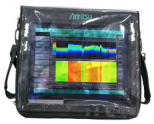	2000-2152-R Splash Screen Cover
	2000-2053-R Shoulder Harness
	2000-1884-R PIM Hunter™ Test Probe (For full specifications, refer to the 2000-1884-R Technical Data Sheet 11410-00999)
	760-261-R Large transit case (for instrument, MA2700A, Yagi/Log Periodic antennas plus minor cables and accessories)
	01-200 Calibrated torque wrench, for GPC-7 and type N connectors
	2000-2074-R Extended Power Pack with Cable

GNSS (GPS) Antennas (active)

Accessory	Description
	2000-2185-R Magnet Mount, SMA (m) with 3 m (9.8 ft) cable, requires 2.7 VDC to 5 VDC
	2000-1652-R Magnet Mount, SMA (m) with 0.3 m (1 ft) cable, requires 3.3 VDC or 5 VDC

Accessory	Description
	2000-1760-R Miniature Antenna, SMA (m), requires 2.5 VDC to 3.7 VDC

Omni Directional Antennas

Accessory	Description
	2000-1751-R 698 MHz to 960 MHz, 1710 MHz to 2100 MHz, 2500 MHz to 2700 MHz, SMA(m), 2 dB, typical, 50 Ω
	2000-1361-R 2400 MHz to 2500 MHz, 5000 MHz to 6000 MHz, SMA(m), 50 Ω

Accessory	Description
	2000-1487-R Telescoping Whip Antenna, BNC (m), VHF through UHF
	2000-2183-R 617 MHz to 5000 MHz, N(m), 0.5 to 3.7 dBi, Dipole Antenna

Mag Mount and Broadband Antennas

Accessory	Description
	2000-2200-R 20 MHz to 21 GHz, N(f), 50 Ω Broadband Antenna
	2000-1946-R Cable 1: 617 MHz to 960 MHz, 3 dBi peak gain, 1710 MHz to 3700 MHz, 4 dBi peak gain, N(m), 50 Ω, 10 ft Cable 2: 3000 MHz to 6000 MHz, 5 dBi peak gain, N(m), 50 Ω, 10 ft Cable 3: GPS 26 dB gain, SMA(m), 50 Ω, 10 ft

Accessory	Description
	2000-1648-R 1700 MHz to 6000 MHz, 3 dBi peak gain, N(m), 50 Ω, 10 ft
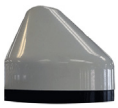	2000-1647-R Cable 1: 698 MHz to 1200 MHz, 2 dBi peak gain, 1700 MHz to 2700 MHz, 5 dBi peak gain, N(m), 50 Ω, 10 ft Cable 2: 3000 MHz to 6000 MHz, 5 dBi peak gain, N(m), 50 Ω, 10 ft Cable 3: GPS 26 dB gain, SMA(m), 50 Ω, 10 ft

Directional Antennas

Accessory	Description
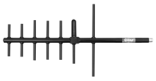	2000-1411-R 824 MHz to 896 MHz, N(f), 12.3 dBi, Yagi
	2000-1412-R 885 MHz to 975 MHz, N(f), 12.6 dBi, Yagi
	2000-1413-R 1710 MHz to 1880 MHz, N(f), 12.3 dBi. Yagi
	2000-1414-R 1850 MHz to 1990 MHz, N(f), 11.4 dBi, Yagi
	2000-1415-R 2400 MHz to 2500 MHz, N(f), 14.1 dBi, Yagi
	2000-1416-R 1920 MHz to 2170 MHz, N(f), 14.3 dBi, Yagi
	2000-1659-R 698 MHz to 787 MHz, N(f), 10.1 dBi, Yagi
	2000-1660-R 1425 MHz to 1535 MHz, N(f), 14.3 dBi, Yagi

Accessory	Description
	2000-1726-R 2500 MHz to 2700 MHz, N(f), 14.1 dBi, Yagi
	2000-2107-R Log Periodic, 20 MHz to 8.5 GHz (requires Port Extender 2000-1798-R or bandpass filter when used with MA2700A)
	2000-1748-R Log Periodic, 1 GHz to 18 GHz, N(f), 6 dBi, typical
	2000-1777-R 9 kHz to 20 MHz, N(f) (requires port extender 2000-1798-R when used with MA2700A)
	2000-1778-R 20 MHz to 200 MHz, N(f) (requires port extender 2000-1798-R when used with MA2700A)
	2000-1779-R 200 MHz to 500 MHz, N(f) (requires port extender 2000-1798-R when used with MA2700A)
	2000-1812-R Portable Yagi Antenna, 450 MHz to 512 MHz, N(f), 7.1 dBi
	2000-1825-R Portable Yagi Antenna, 380 MHz to 430 MHz, N(f), 7.1 dBi

InterferenceHunter™ and Accessories

Accessory	Description
	MA2700A Handheld Interference Hunter (For full specifications, refer to the MA2700A Technical Data Sheet 11410-00692
	2000-1735-R 776 MHz to 788 MHz, N(m) and N(f), 50 Ω
	2000-1736-R 815 MHz to 850 MHz, N(m) and N(f), 50 Ω
	2000-1737-R 1711 MHz to 1756 MHz, N(m) and N(f), 50 Ω
	2000-1738-R 1850 MHz to 1910 MHz, N(m) and N(f), 50 Ω
	2000-1739-R 880 MHz to 915 MHz, N(m) and N(f), 50 Ω
	2000-1740-R 1710 MHz to 1785 MHz, N(m) and N(f), 50 Ω

Accessory	Description
	2000-1734-R 699 MHz to 715 MHz, N(m) and N(f), 50 Ω
	2000-1741-R 1920 MHz to 1980 MHz, N(m) and N(f), 50 Ω
	2000-1742-R 832 MHz to 862 MHz, N(m) and N(f), 50 Ω
	2000-1743-R 2500 MHz to 2570 MHz, N(m) and N(f), 50 Ω
	2000-1798-R Port Extender, DC to 6 GHz
	2000-1799-R 2305 MHz to 2320 MHz, N(m) and N(f), 50 Ω
	2000-2147-R 3700 MHz to 3980 MHz, N(m) to N(f), 50 Ω

Adapters

Accessory	Description
	1091-26-R SMA(m) to N(m), DC to 18 GHz, 50 Ω
	1091-27-R SMA(f) to N(m), DC to 18 GHz, 50 Ω
	1091-80-R SMA(m) to N(f), DC to 18 GHz, 50 Ω
	1091-81-R SMA(f) to N(f), DC to 18 GHz, 50 Ω
	1091-172-R BNC(f) to N(m), DC to 1.3 GHz, 50 Ω
	1091-417-R N(m) to QMA(f), DC to 6 GHz, 50 Ω
	1091-418-R N(m) to QMA(m), DC to 18 GHz, 50 Ω

Accessory	Description
	510-102-R N(m) to N(m), DC to 11 GHz, 50 Ω, 90 degrees right angle
	510-90-R 7/16 DIN(f) to N(m), DC to 7.5 GHz, 50 Ω
	510-91-R 7/16 DIN(f) to N(f), DC to 7.5 GHz, 50 Ω
	510-92-R 7/16 DIN(m) to N(m), DC to 7.5 GHz, 50 Ω
	510-93-R 7/16 DIN(m) to N(f), DC to 7.5 GHz, 50 Ω
	510-96-R 7/16 DIN(m) to 7/16 DIN (m), DC to 7.5 GHz, 50 Ω
	510-97-R 7/16 DIN(f) to 7/16 DIN (f), DC to 7.5 GHz, 50 Ω

Precision Adapters

Accessory	Description
	34NN50A N(m) to N(m), DC to 18 GHz, 50 Ω

Accessory	Description
	34NFNF50 N(f) to N(f), DC to 18 GHz, 50 Ω

Attenuators

Accessory	Description
	1010-128-R 40 dB, 150 W, DC to 3 GHz, N(m) to N(f)
	3-1010-122 20 dB, 5 W, DC to 12.4 GHz, N(m) to N(f)
	3-1010-123 30 dB, 50 W, DC to 8.5 GHz, N(m) to N(f)
	3-1010-124 40 dB, 100 W, DC to 8.5 GHz, N(f) to N(m), Uni-directional

Accessory	Description
	42N50-20 20 dB, 5 W, DC to 18 GHz, N(m) to N(f)
	42N50A-30 30 dB, 50 W, DC to 18 GHz, N(m) to N(f)
	1010-127-R 30 dB, 150 W, DC to 3 GHz, N(m) to N(f)

Training at Anritsu

Anritsu has designed courses to help you stay up to date with technologies important to your job. For available training courses, visit: https://www.anritsu.com, and search for training and education.

Anritsu Advancing beyond

• United States

Anritsu Americas Sales Company
490 Jarvis Drive, Morgan Hill, CA 95037-2809, U.S.A.
Phone: +1-800-Anritsu (1-800-267-4878)

• Canada

Anritsu Electronics Ltd.
Americas Sales and Support
490 Jarvis Drive, Morgan Hill, CA 95037-2809, U.S.A.
Phone: +1-800-Anritsu (1-800-267-4878)

• Brazil

Anritsu Eletronica Ltda.
Praça Amadeu Amaral, 27 - 1 Andar
01327-010 - Bela Vista - Sao Paulo - SP, Brazil
Phone: +55-11-3283-2511
Fax: +55-11-3288-6940

• Mexico

Anritsu Company, S.A. de C.V.
Blvd Miguel de Cervantes Saavedra #169 Piso 1,
Col. Granada, Mexico, Ciudad de Mexico,
11520, MEXICO
Phone: +52-55-4169-7104

• United Kingdom

Anritsu EMEA Limited
900 Capability Green,
Luton, Bedfordshire, LU1 3LU, U.K.
Phone: +44-1582-433200
Fax: +44-1582-731303

• France

Anritsu SA
12 avenue du Québec, Immeuble Goyave,
91140 VILLEBON SUR YVETTE, France
Phone: +33-1-60-92-15-50

• Germany

Anritsu GmbH
Nemetschek Haus, Konrad-Zuse-Platz 1,
81829 München, Germany
Phone: +49-89-442308-0
Fax: +49-89-442308-55

• Italy

Anritsu S.R.L.
Spaces Eur Arte, Viale dell'Arte 25, 00144 Roma, Italy
Phone: +39-6-509-9711

• Sweden

Anritsu AB
Kistagången 20 B, 2 tr, 164 40 Kista, Sweden
Phone: +46-8-534-707-00

• Finland

Anritsu AB
Technopolis Aviapolis, Teknobulevardi 3-5 (D208.5.),
FI-01530 Vantaa, Finland
Phone: +358-20-741-8100

• Denmark

Anritsu A/S
c/o Regus Winghouse, Ørestads Boulevard 73, 4th floor,
2300 Copenhagen S, Denmark
Phone: +45-7211-2200

• Spain

Anritsu EMEA Ltd.
Representation Office in Spain
Calle Manzanares 4, Primera planta, 28005
Madrid, Spain
Phone: +34-91-572-6761

• Austria

Anritsu Pty Ltd
Am Belvedere 10, A-1100 Vienna, Austria
Phone: +43-(0)1-717-28-710

• United Arab Emirates

Anritsu EMEA Ltd.
Anritsu A/S
Office No. 164, Building 17, Dubai Internet City
P. O. Box – 501901, Dubai, United Arab Emirates
Phone: +971-4-3758479

• India

ANRITSU INDIA PRIVATE LIMITED
6th Floor, Indiqube ETA, No.38/4, Adjacent to EMC2,
Doddanekundi, Outer Ring Road,
Bengaluru – 560048, India
Phone: +91-80-6728-1300
Fax: +91-80-6728-1301

• Singapore

ANRITSU PTE LTD
1 Jalan Kilang Timor, #07-04/06 Pacific Tech Centre
Singapore 159303
Phone: +65-6282-2400
Fax: +65-6282-2533

• Vietnam

ANRITSU COMPANY LIMITED
16th Floor, Peakview Tower, 36 Hoang Cau Street,
O Cho Dua Ward, Dong Da District, Hanoi, Vietnam
Phone: +84-24-3201-2730
Fax: +84-24-3201-2740

• P.R. China (Shanghai)

Anritsu (China) Co., Ltd.
Room 2701-2705, Tower A, New Caohejing
International Business Center No. 391 Gui Ping Road
Shanghai, 200233, P.R. China
Phone: +86-21-6237-0898
Fax: +86-21-6237-0899

• P.R. China (Hong Kong)

ANRITSU COMPANY LIMITED
Unit 1302, 13th Floor, New East Ocean Center,
No.9 Science Museum Road, TsimShaTsui East,
Kowloon, Hong Kong
Phone: +852-2301-4980
Fax: +852-2301-3545

• Japan

Anritsu Corporation
8-5, Tamura-cho, Atsugi-shi, Kanagawa, 243-0016
Japan
Phone: +81-46-296-6509
Fax: +81-46-225-8352

• South Korea

Anritsu Corporation, Limited
8F, A TOWER, 20, Gwacheondaero 7-gil, Gwacheon-si,
Gyeonggi-do, 13840, Republic of Korea
Phone: +82-2-6259-7300
Fax: +82-2-6259-7301

• Australia

Anritsu Pty. Ltd.
Unit 20, 21-35 Ricketts Road,
Mount Waverley, Victoria 3149, Australia
Phone: +61-3-9558-8177
Fax: +61-3-9558-8255

• Taiwan

ANRITSU COMPANY, INC.
7F, No. 316, Sec. 1, NeiHu Rd., Taipei 114, Taiwan
Phone: +886-2-8751-1816
Fax: +886-2-8751-1817

List Revision Date: 20251202

Copyright April 2026, Anritsu Company, USA. All Rights Reserved.
® Anritsu All trademarks are registered trademarks of their respective companies.
Anritsu utilizes recycled paper and environmentally conscious inks and toner.