Maintenance Manual

VectorStar MS4640A Series Microwave Vector Network Analyzer

MS4647A, 10 MHz to 70 GHz, V Connectors
MS4645A, 10 MHz to 50 GHz, V Connectors
MS4644A, 10 MHz to 40 GHz, K Connectors
MS4642A, 10 MHz to 20 GHz, K Connectors

Anritsu Company
490 Jarvis Drive
Morgan Hill, CA 95037-2809
USA
http://www.anritsu.com

Part Number: 10410-00268
Revision: E
Printed: May 2022
Copyright 2022 Anritsu Company

Safety Symbols

To prevent the risk of personal injury or loss related to equipment malfunction, Anritsu Company uses the following symbols to indicate safety-related information. For your own safety, please read the information carefully *before* operating the equipment.

Symbols Used in Manuals

Danger

This indicates a risk from a very dangerous condition or procedure that could result in serious injury or death and possible loss related to equipment malfunction. Follow all precautions and procedures to minimize this risk.

Warning

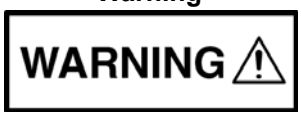

This indicates a risk from a hazardous condition or procedure that could result in light-to-severe injury or loss related to equipment malfunction. Follow all precautions and procedures to minimize this risk.

Caution

This indicates a risk from a hazardous procedure that could result in loss related to equipment malfunction. Follow all precautions and procedures to minimize this risk.

Safety Symbols Used on Equipment and in Manuals

The following safety symbols are used inside or on the equipment near operation locations to provide information about safety items and operation precautions. Ensure that you clearly understand the meanings of the symbols and take the necessary precautions *before* operating the equipment. Some or all of the following five symbols may or may not be used on all Anritsu equipment. In addition, there may be other labels attached to products that are not shown in the diagrams in this manual.

This indicates a prohibited operation. The prohibited operation is indicated symbolically in or near the barred circle.

This indicates a compulsory safety precaution. The required operation is indicated symbolically in or near the circle.

This indicates a warning or caution. The contents are indicated symbolically in or near the triangle.

This indicates a note. The contents are described in the box.

These indicate that the marked part should be recycled.

Warning

Always refer to the operation manual when working near locations at which the alert mark, shown on the left, is attached. If the operation, etc., is performed without heeding the advice in the operation manual, there is a risk of personal injury. In addition, the equipment performance may be reduced.

Moreover, this alert mark is sometimes used with other marks and descriptions indicating other dangers.

Warning

or

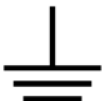

When supplying power to this equipment, connect the accessory 3-pin power cord to a 3-pin grounded power outlet. If power is supplied without grounding the equipment, there is a risk of receiving a severe or fatal electric shock.

Warning

This equipment can not be repaired by the operator. Do not attempt to remove the equipment covers or to disassemble internal components. Only qualified service technicians with a knowledge of electrical fire and shock hazards should service this equipment. There are high-voltage parts in this equipment presenting a risk of severe injury or fatal electric shock to untrained personnel. In addition, there is a risk of damage to precision components.

Warning

Use two or more people to lift and move this equipment, or use an equipment cart. There is a risk of back injury if this equipment is lifted by one person.

Caution

Electrostatic Discharge (ESD) can damage the highly sensitive circuits in the instrument. ESD is most likely to occur as test devices are being connected to, or disconnected from, the instrument's front and rear panel ports and connectors. You can protect the instrument and test devices by wearing a static-discharge wristband. Alternatively, you can ground yourself to discharge any static charge by touching the outer chassis of the grounded instrument before touching the instrument's front and rear panel ports and connectors. Avoid touching the test port center conductors unless you are properly grounded and have eliminated the possibility of static discharge.

Repair of damage that is found to be caused by electrostatic discharge is not covered under warranty.

Warning

This product is supplied with a rechargeable battery that could potentially leak hazardous compounds into the environment. These hazardous compounds present a risk of injury or loss due to exposure. Anritsu Company recommends removing the battery for long-term storage of the instrument and storing the battery in a leak-proof plastic container. Follow the environmental storage requirements specified in the product technical data sheet.

Table of Contents

Chapter 1 — General Information

1-1 Scope of Manual 1-1

1-2 Chapter Introduction 1-1

1-3 VectorStar MS4640A VNA Description 1-2
- Available Models 1-3
- Included Materials 1-3
- Available Options 1-3
- Identification Number 1-4

1-4 Documentation 1-5
- Online Manuals 1-5
- Printed Manuals 1-5
- Related Manuals 1-5

1-5 Basic Maintenance 1-6
- Cleaning LCD Display Touch Screen 1-6
- Maintain Operating System Integrity 1-6
- Antivirus Protection 1-6
- Windows OS Updates 1-6
- Hard Disk Drive Data Backup 1-6
- Troubleshooting and Repair 1-6
- Internal Hardware Adjustments and Calibrations 1-6
- System Test/Certification 1-7

1-6 Performance Specifications 1-7

1-7 Anritsu Customer Service Centers 1-7

1-8 Electrostatic Discharge Prevention 1-7

1-9 Recommended Test Equipment 1-8

1-10 Recommended Tools and Supplies 1-10
- Flat Blade Screwdrivers 1-10
- Phillips-Head Screwdrivers 1-10
- Torque Wrenches 1-10
- Nut Drivers, Hex Drivers, Allen Wrenches, and Ratchet Wrenches 1-10
- End Wrenches 1-10
- Socket Wrenches and Sockets 1-11
- Pliers and Cutters 1-11
- Mechanical Alignment and Positioning Tools 1-11
- Cleaning Supplies 1-11
- Miscellaneous Supplies 1-11

1-11 Recommended T3545 RF Deck Fixture 1-11

Chapter 2 — Replaceable Parts

2-1 Introduction 2-1

2-2 VectorStar Technical Data Sheet 2-1

2-3 Cross Reference Tables 2-1

2-4 Exchange Assembly Program. 2-1
2-5 Replaceable Subassemblies and Parts 2-2
Notes for Replacement Part Tables. 2-2
Replacement Parts by Location, ERN, and RPN. 2-3
2-6 External Parts 2-18
2-7 Major Internal Assemblies. 2-19
2-8 Top Side PCB Locations – Phase 1 VNAs 2-21
2-9 Top Side PCB Locations – Phase 2 VNAs 2-23
2-10 Digital PCBs – Phase 1 VNAs 2-25
2-11 Digital PCB – A10 DSP Module PCB Assembly 2-28
2-12 Digital PCBs – Phase 2 VNAs 2-30
2-13 Analog Module PCBs 2-34
A11 IF Band Module – ND70076 – 62080. 2-35
A13 Source Module – ND70077 – 62082 or ND73202 – 62082-1 2-36
A15 Low Band Receiver Module – ND70075 – 62079 2-37
2-14 Front Panel Assembly and Connections – Phase 1 VNAs 2-38
Front Panel Removal 2-38
Phase 1 – Front Panel Assembly – ND70060 – 62078 2-39
2-15 Front Panel and Connections – Phase 2 VNAs 2-42
Phase 2 – Front Panel Assembly – ND73195 – 3-72015 2-42
Motherboard 2 PCB – ND73878 – 3-72813-3 – Front Panel Connections 2-43
2-16 RF Deck – Overview. 2-44
Accessing the RF Deck 2-44
RF Deck Remains in Chassis 2-44
RF Deck Removed 2-44
2-17 RF Deck – Bottom Side – A18 PCB Modules. 2-45
MS4642A A18 RF Control PCB Configuration 2-45
MS4644A A18 RF Control PCB Configuration 2-46
MS4645A / MS4647A A18 RF Control PCB Configuration 2-47
MS4647A with Option 080/081 A18 RF Control PCB Configuration 2-48
2-18 RF Deck – Bottom Side – Port Modules – MS4647A 70 GHz – Option 062. 2-49
2-19 RF Deck – Top Side – Right Side Modules 2-51
2-20 Top Side Modules – Right Side 2-52
2-21 RF Deck – Top Side – Attenuator Modules 2-54
RF Deck Top Side Option 061 Low Band Attenuators 2-54
RF Deck Top Side Modules – Option 062 Low Band Attenuators. 2-56
2-22 RF Deck – Top Side – Sampler/LO Distribution Module Assembly 2-57
SLODM Assembly – 62084 B – Components 2-57
SLODM Assembly – 62084 B – Exploded View 2-59
SLODM Assembly – 62084 C – Components 2-61
SLODM Assembly – 73231 A – Components 2-63
SLODM Assembly – 62084 D – Components 2-65
SLODM Assembly – 73231 B – Components 2-67

2-23 Rear Panel 2-69
Rear Panel Assemblies 2-69
Rear Panel Overview. 2-70
A17 Rear Panel PCB Assembly 2-72
Rear Panel Inside Components. 2-74
2-24 Power Supply Modules. 2-76
Phase 1 – Power Supply Module and Cable Harness – ND70072 – 62088 2-76
Phase 2 – Power Supply Module and Cable Harnesses – ND73933 – 71995 2-78
2-25 Phase 1 and Phase 2 Motherboard PCB Assemblies 2-80
2-26 Phase 1 – MB2 PCB Assembly – ND70070 – 61923-3 2-82
2-27 Phase 2 – MB2 PCB Assembly – ND73878 – 3-72813-3. 2-86
Motherboard 1 PCB Assembly – ND70069 – 61920-3 2-90
2-28 Digital Fan Assembly – ND70073 – 62095-1 2-92
2-29 Replacement Part Cross References 2-94
2-30 Sorted by Engineering Reference Number and Name 2-95
2-31 Sorted by Replacement Part Number. 2-105
2-32 Sorted by Anritsu Part Number. 2-115

Chapter 3 — Performance Verification

3-1 Introduction to Performance Verification. 3-1
3-2 VNA Traceability and Uncertainty. 3-1
First Tier of Uncertainty - The VNA Calibration 3-1
Second Tier of Uncertainty - Systematic Measurement Errors 3-1
Third Tier of Uncertainty - Random Measurement Error 3-2
Standards and Verification 3-2
3-3 Electrostatic Discharge Prevention. 3-2
3-4 Calibration and Measurement Conditions. 3-3
3-5 Performance Verification 3-3
3-6 System Verification. 3-3
3-2300-527 Performance Verification Software (PVS) 3-3
Verification Result Determination 3-4
3-7 System Verification Procedure 3-6
Equipment Required 3-6
Special Precautions. 3-6
Procedure 3-6
3-8 Instrument Key Parameter Performance Tests 3-8
3-9 Automated Performance Tests. 3-9
Equipment Required for Automated Tests 3-10
Procedures 3-10
3-10 Manual Performance – Log Magnitude Dynamic Accuracy Test 3-11
Equipment Required 3-11
Procedure 3-11
Analysis of the Measurement 3-17
3-11 Automated Performance Test Descriptions 3-18

3-12 Maximum Port Power Output Test . . . 3-19
Equipment Required . . . 3-19
Procedure . . . 3-19
3-13 Port Power Accuracy Test . . . 3-20
Equipment Required . . . 3-20
Procedure . . . 3-20
3-14 Frequency Accuracy Test . . . 3-21
Equipment Required . . . 3-21
Procedure . . . 3-21
3-15 High Level Noise Test . . . 3-22
Equipment Required . . . 3-22
Procedure . . . 3-22
3-16 Noise Floor Test . . . 3-24
Equipment Required . . . 3-24
Procedure . . . 3-24
3-17 Raw Source Match and Raw Directivity Test . . . 3-24
Equipment Required . . . 3-25
Procedure . . . 3-25

Chapter 4 — Troubleshooting

4-1 Introduction to Troubleshooting . . . 4-1
4-2 General Safety Warnings . . . 4-1
4-3 Equipment Damage Warning . . . 4-1
4-4 Test Equipment . . . 4-2
4-5 Troubleshooting Aids and Test Procedures . . . 4-2
4-6 Troubleshooting with Error Message . . . 4-3
4-7 Troubleshooting with Self Test . . . 4-5
Power Up Self Test . . . 4-5
Triggered Self Test . . . 4-5
4-8 Troubleshooting with Power Supply Voltage Check . . . 4-8
Procedure . . . 4-8
4-9 Non-Ratio Power Level Check . . . 4-16
Procedure . . . 4-16
4-10 Hardware Problems . . . 4-19
4-11 Troubleshooting Power-Up Problems . . . 4-20
4-12 Troubleshooting Boot-Up Problems . . . 4-21
4-13 Troubleshooting RF Section – Power-Related Problems . . . 4-23
4-14 Troubleshooting Frequency Related Problems . . . 4-30
4-15 Troubleshooting Front Panel Problems . . . 4-31
4-16 Troubleshooting Rear Panel Problems . . . 4-32
4-17 Troubleshooting Software Problems . . . 4-33
Troubleshooting OS Related Problems . . . 4-33
Troubleshooting VectorStar Application Software-Related Problems . . . 4-33

4-18 Troubleshooting Measurement Problems 4-34
VNA Measurement Quality 4-34
Checking Possible Measurement Problems 4-34

Chapter 5 — Adjustment Procedures

5-1 Introduction 5-1
5-2 Recommended Test Equipment 5-2
5-3 Recommended Adjustment Procedures 5-4
5-4 Adjustment Setup 5-7
Procedure 5-7
5-5 10 MHz Frequency Reference Adjustment (10 MHz Cal) 5-11
Automatic Method Required Equipment 5-11
Automatic Procedure 5-11
Manual Method Required Equipment 5-12
Manual Method Procedure 5-12
5-6 Source Pretune DAC Adjustment (Src Pretune Cal) 5-13
Equipment Required 5-13
Procedure 5-13
5-7 Source LO Level Adjustment (Src LO Level Cal) 5-14
Equipment Required 5-14
Procedure 5-14
High Band LO Level Adjustment 5-18
Low Band LO Level Optimization 5-24
High Band LO Level Optimization 5-26
5-8 SQM Power Adjustment (SQM Power Cal) 5-32
Equipment Required 5-32
Procedure 5-32
5-9 Source Auto Leveling Control Adjustment (ALC Cal) 5-35
Equipment Required 5-35
Procedure 5-35
ALC Offset Cal 5-36
Port 1 ALC Cal 5-37
Port 2 ALC Cal 5-38
5-10 Analog In Adjustment (Analog In Cal) 5-40
Equipment Required 5-40
Procedure 5-40
5-11 Factory RF Calibration (RF Cal) 5-41
Equipment Required 5-41
Procedure 5-41
5-12 Factory Receiver Calibration (Rcvr Cal) 5-44
Equipment Required 5-44
Procedure 5-44
5-13 LCD Touch Panel Calibration Adjustments 5-45
Equipment Required 5-45
Procedure 5-45

5-14 Through Line Length Determination Procedure 5-50
Equipment Required 5-50
Procedure 5-50

Chapter 6 — Theory of Operation

6-1 Introduction 6-1
6-2 System Overview 6-1
6-3 System Description 6-2
6-4 Functional Description of Major Assemblies 6-3
6-5 Analog Section 6-5
RF Source Module 6-5
Low Band Receiver Module 6-6
IF Band Module 6-6
6-6 RF Deck 6-7
RF Component Control PCB Assembly 6-7
Diplexer/Bias Tee Assembly 6-7
Low Band Transfer Switch 6-7
High Band Transfer Switch 6-7
LO Module 6-8
5-20 GHz Doubler Module 6-8
Switched Doubler Module 6-8
Switched Quadrupler Module 6-8
Low Band Source Attenuators 6-8
Low Band Test Attenuators 6-8
High Band Source Attenuators 6-8
High Band Test Attenuators 6-8
Low Band Receiver Bridges 6-9
Low Band Test Bridges 6-9
High Band Reference Couplers 6-9
Port Couplers – Port 1 and Port 2 6-9
Sampler Modules 6-9
LO Coupler 6-9
Level Detectors 6-9
6-7 Digital Section 6-10
Single Board Computer 6-10
Digital Signal Processor Module 6-10
Graphic Adapter Card 6-11
Graphics Processor Unit Module 6-11
GPIB Module 6-11
USB Controller Card 6-11
cPCI to PMC Adapter Card 6-11
Carrier Board 6-11
Hard Disk Drive Assembly 6-11
Solid State Drive Assembly 6-12

6-8 Main Chassis Assemblies 6-13
Motherboard 1 PCB Assembly 6-13
Motherboard 2 PCB Assembly 6-13
Power Supply 6-13
Front Panel Assembly 6-13
Rear Panel PCB Assembly 6-14
6-9 Overall Operation 6-15
Low Band Operation 6-15
High Band Operation 6-15
6-10 Functional Block Diagrams 6-16

Chapter 7 — Replacement Part Groups and Common Procedures

7-1 Introduction 7-1
7-2 Procedure Definitions 7-1
7-3 Replacement Part Groups 7-2
Common Procedures 7-2
External Components 7-3
Front Panel 7-3
Digital PCB and Analog Module Assemblies 7-3
RF Deck Bottom Side Module Replacement Overview 7-4
RF Deck Bottom Side A18 Modules and PCB 7-4
RF Deck Bottom Side Port Module Groups 7-5
RF Deck Removal and Installation 7-6
RF Deck Top Side Modules 7-6
Rear Panel Components 7-7
Power Supply Module 7-7
Service the Digital Fan Assembly 7-7
Motherboard 1 PCB and Motherboard 2 PCB Assemblies 7-7
Full Disassembly Procedures 7-8
7-4 Common - Prepare Work Area and Safety 7-9
Procedure 7-9
7-5 Common - Remove Outer Cover 7-10
Applicability 7-10
Procedure 7-10
7-6 Common - Remove Inner Cover 7-13
Procedure 7-14
7-7 Common - Install Inner Cover 7-15
Procedure 7-15
7-8 Common - Install Outer Cover 7-16
Applicability 7-16
Procedure 7-16

Chapter 8 — External Component Procedures

8-1 Introduction 8-1

8-2 Replace Front Panel Test Ports 8-2
Parts and Applicability 8-2
Procedure 8-3
8-3 Replace Front Panel Loops 8-4
Parts and Applicability 8-4
Procedure 8-4
8-4 Replace Rear Panel Loops 8-5
Parts and Applicability 8-5
Procedure 8-5
8-5 Replace the Solid State Drive/Hard Disk Drive Assembly 8-6
Parts and Applicability 8-6
Identification 8-6
Procedure 8-6

Chapter 9 — Remove and Install Digital/Analog PCBs

9-1 Introduction 9-1
9-2 Top Side Digital PCBs 9-2
Summary 9-2
Parts and Applicability 9-2
Digital PCB Locations 9-3
9-3 Remove Digital PCB Assemblies 9-7
Procedure 9-7
9-4 Replace the A10 DSP Module PCB Assembly – ND70066 9-8
Parts and Applicability 9-8
Procedure 9-8
9-5 Replace the A3 SBC and A4 USB PCB Assemblies 9-9
Identification – A3 SBC PCB and A4 USB PCB 9-9
Procedure and A3 DIP Switch Settings 9-10
9-6 Replace the A6 Adapter, A7 Graphics, and A8 GPIB PCBs 9-11
Identification – A6 and A7 PCBs 9-12
A6, A7, and A8 PCB Procedure and A7 DIP Switch Settings 9-14
9-7 Install the Phase 1 Top Side Digital PCBs 9-15
Parts and Applicability 9-15
Identification 9-15
Procedure 9-15
9-8 Replace the Phase 2 Carrier PCB and Daughter-Boards 9-16
Parts and Applicability 9-16
Identification – Carrier Board – Front Side Assemblies 9-17
Identification – Carrier Board – Back Side Assemblies 9-19
9-9 Remove the Carrier Board Daughter-Boards 9-20
Parts and Applicability 9-20
Identification 9-20
Removal and Replacement Procedure 9-20
9-10 Reassemble the Carrier Board PCB Assembly 9-23
Procedure 9-23

9-11 Install the Phase 2 Carrier Board PCB – ND73874 – 3-72444-3 9-25
Procedure 9-25
9-12 Location of Right Side Analog Module Assemblies 9-26
9-13 Remove Right Side Analog Modules 9-27
Parts and Applicability 9-27
Identification 9-27
9-14 Prepare Right Side Analog Modules. 9-31
9-15 Install the Right Side Analog Modules 9-31
Parts and Applicability 9-31
Procedure 9-31

Chapter 10 — Front Panel Assembly

10-1 Introduction. 10-1
10-2 Access for Other Components 10-1
10-3 Remove the Phase 1 Front Panel Assembly 10-3
Parts and Applicability 10-3
Procedure 10-3
10-4 Remove the Phase 2 Front Panel Assembly 10-11
Parts and Applicability 10-11
Procedure 10-12
10-5 Prepare the Replacement Front Panel Assembly. 10-16
Parts and Applicability 10-16
Procedure 10-16
10-6 Install the Phase 1 Front Panel Assembly 10-19
Procedure 10-19
10-7 Install the Phase 2 Front Panel Assembly 10-21
Procedure 10-21

Chapter 11 — RF Deck Module Replacement Overview

11-1 Introduction. 11-1
11-2 RF Deck Chassis Assembly 11-2
11-3 RF Deck Top Side Center Modules 11-2
11-4 RF Deck Top Side Right Modules 11-5
11-5 RF Deck Top Side Rear Attenuator Modules - Overview 11-7
11-6 RF Deck Top Side Rear Attenuator Modules - Option 061. 11-8
11-7 RF Deck Top Side Rear Attenuator Modules - Option 062. 11-9
11-8 RF Deck Bottom Side A18 Modules and PCB 11-11
A18 PCB Module Combinations 11-11
11-9 MS4642A A18 Modules and PCB. 11-12
11-10 MS4644A A18 Modules and PCB. 11-13
11-11 MS4645A / MS4647A A18 Modules and PCB 11-14
11-12 RF Deck Bottom Side - A18 RF Control PCB Assembly 11-15

11-13 RF Deck Bottom Side Port Group Modules 11-16
Port Group Modules Introduction 11-16
RF Deck Chassis 11-16
Ports by Instrument Model and Equipped Option 11-17
Port Group Module Notes 11-19
Port Group Reference Figures 11-20
MS4642A – Standard No Options 11-21
MS4644A – Standard No Options 11-23
MS4645A / MS4647A – Standard No Options 11-25
MS4645A / MS4647A – Option 051 – Front Panel Loops 11-27
MS4645A / MS4647A – Option 061 – Loops and Two Attenuators 11-29
MS4645A / MS4647A Option 062 – Loops and Four Attenuators 11-31
11-14 Finding Module Locations 11-33
11-15 RF Deck Bottom Side - Port Modules - Standard No Options 11-34
Introduction 11-34
11-16 RF Deck Bottom Side - Port Modules - Option 051 11-36
Introduction 11-36
11-17 RF Deck Bottom Side - Port Modules - Option 061 11-37
Introduction 11-37
11-18 RF Deck Bottom Side - Port Modules - Option 062 11-39
Introduction 11-39

Chapter 12 — RF Deck Bottom Side A18 Modules and PCB

12-1 Introduction 12-1
12-2 A18 Module Location and Configuration 12-2
Removing the A18 PCB 12-2
A18 Cables and Connectors 12-2
MS4642A A18 RF Control PCB Configuration 12-3
MS4644A A18 RF Control PCB Configuration 12-4
MS4645A / MS4647A A18 RF Control PCB Configuration 12-5
MS4647A with Option 080/081 A18 RF Control PCB Configuration 12-6
12-3 Remove A112 SDM – ND70098 – 59772 12-7
Part and Applicability 12-7
Reference Figures 12-7
Procedure 12-7
12-4 Prepare Replacement A112 SDM – ND70098 – 59772 12-9
12-5 Install A112 SDM – ND70098 – 59772 12-9
Part and Applicability 12-9
Reference Figures 12-9
Procedure 12-9
12-6 Remove A114 SQM – ND70099 – 60-327 12-11
Part and Applicability 12-11
Procedure 12-11
12-7 Prepare Replacement A114 SQM – ND70099 – 60-327 12-13
Procedure 12-14

12-8 Install A114 SQM – ND70099 – 60-327 12-15
Procedure 12-15
12-9 Remove A108 HBTS/VITS Module – ND70092 or ND70093 12-16
Critical Removal Concepts 12-16
Procedure 12-17
12-10 Prepare Replacement A108 HBTS/VITS 12-20
12-11 Install A108 HBTS/VITS – ND70092 or ND70093 12-20
Parts and Applicability 12-20
Procedure 12-20
12-12 Remove A133 RF Coupler Module – No ND – 72237 12-22
Parts and Applicability 12-22
Procedure 12-22
12-13 Prepare A133 20-40 GHz RF Coupler Module – No ND – 72237 12-22
12-14 Install A133 RF Coupler Module – No ND – 72237 12-23
Parts and Applicability 12-23
Procedure 12-23
12-15 Remove A18 RF Control PCB – ND70068 – 61929-3 12-24
Part and Applicability 12-24
Identification - A18 PCB Connector Locations 12-25
Procedure 12-26
12-16 Prepare Replacement A18 PCB – ND70068 – 61929-3. 12-28
12-17 Install A18 RF Control PCB – ND70068 – 61929-3 12-28
Part and Applicability 12-28
Procedure 12-28

Chapter 13 — RF Deck Bottom Side Port Modules

13-1 Introduction 13-1
Port Group Definition 13-1
Number of Modules in a Port Group 13-1
A108 Module 13-1
Test Port Adapter 13-1
Single Module Port Groups 13-2
Side Attached Port Group Modules 13-2
RF Deck In. 13-2
Procedure Overview 13-2
Port Module Groups Mirrored 13-2
Part Numbers Related to Model Numbers. 13-3

13-2 Chapter Organization 13-4
Single Module Port Groups 13-4
Side Attached Modules 13-4
Standard No Options - Test Port 2 Modules 13-4
Standard No Options - Test Port 1 Modules 13-4
Option 051/061/062 - Test Port 2 Modules 13-4
Option 051 - Port 1 Source Modules 13-4
Option 051/061/062 - Test Port 1 Modules 13-4
Option 051/061 - Test Port 2 Modules 13-4
Option 061 - Port 1 Source Modules 13-4
Option 062 - Port 2 Source Modules 13-5
Port Group Modules Completion 13-5
13-3 Modules by Instrument and Option 13-6
Standard No Options 13-6
Option 051, 061, and 062 13-6
13-4 MS4642A - Standard No Options - Port Modules 13-7
13-5 MS4644A - Standard No Options - Port Modules 13-9
13-6 MS4645A / MS4647A - Standard No Options - Port Modules 13-11
13-7 MS4645A / MS4647A - Option 051 - Front Panel Loops 13-13
13-8 MS4645A / MS4647A - Option 061 - Loops & Two Attenuators 13-15
13-9 MS4645A / MS4647A - Option 062 - Loops & Four Attenuators 13-17
13-10 Test Port 2 Module Group Assembly 13-19
13-11 A107 and A105 Reference Module/Bracket Assembly 13-21
13-12 A110 Port 2 and A109 Port 1 Level Detector Modules 13-23
13-13 Test Port 1 Module Group Assembly 13-25
13-14 Identifying Port Module Removal and Installation Procedures 13-27
MS4642A / MS46544A Port Group Modules and Procedures 13-27
MS4645A / MS4647A Port Group Modules and Procedures 13-32
13-15 Option 061/062 - Port 2 b2/Port 1 b1 Attenuators - Removing 13-37
Use 13-37
Identification - Option 061 - Port 2 b2 A123 & Port 1 Source A121 Attenuators 13-37
Identification - Option 062 A123, A122, A121, and A120 Attenuators 13-40
Parts and Applicability 13-42
Procedure 13-45
13-16 Option 061/062 - Attenuators - Preparing 13-47
Procedure 13-49
13-17 Option 061/062 - Port 2 b2/Port 1 b1 Attenuators - Installing 13-51
Use 13-51
Parts and Applicability 13-51
Procedure 13-51

13-18 Side-Attached Modules - Standard/All Options - Removing 13-53
Use 13-53
Identification 13-53
Parts and Applicability 13-58
Procedure 13-58
13-19 Side-Attached Modules - Preparing 13-60
Parts and Applicability 13-60
Procedure 13-60
13-20 Side-Attached Modules - Installing 13-61
Parts and Applicability 13-61
Procedure 13-61
13-21 Standard No Options - Test Port 2 Modules - Removing 13-62
Use 13-62
Identification 13-63
Parts and Applicability 13-64
Procedure 13-65
13-22 Standard No Options - Test Port 2 Modules - Installing 13-68
Identification 13-68
Procedure 13-68
13-23 Standard No Options - Test Port 1 Modules - Removing 13-71
Use 13-71
Identification 13-72
Parts and Applicability 13-73
Procedure 13-73
13-24 Standard No Options - Test Port 1 Modules - Installing 13-76
Identification 13-76
Procedure 13-76
13-25 Option 051/061/062 - Test Port 2 Modules - Removing 13-79
Use 13-79
Identification 13-80
Parts and Applicability 13-80
Procedure 13-81
13-26 Option 051/061/062 - Test Port 2 Modules - Installing 13-83
Use 13-83
Parts and Applicability 13-83
Identification 13-83
Procedure 13-83
13-27 Option 051 - Port 1 Source Modules - Removing 13-85
Use 13-85
Identification 13-86
Parts and Applicability 13-87
Procedure 13-87

13-28 Option 051 - Port 1 Source Modules - Installing 13-89
Use 13-89
Identification. 13-89
Procedure 13-89
13-29 Option 051/061/062 - Test Port 1 Modules - Removing 13-91
Use 13-91
Identification. 13-92
Procedure 13-93
13-30 Option 051/061/062 - Test Port 1 Modules - Installing 13-95
Identification. 13-95
Parts and Applicability 13-95
Procedure 13-95
13-31 Option 051/061 - Port 2 Source Modules - Removing 13-97
Use 13-97
Identification. 13-98
Parts and Applicability 13-99
Procedure 13-99
13-32 Option 051/061 - Port 2 Source Modules - Preparing. 13-100
13-33 Option 051/061 - Port 2 Source Modules - Installing 13-101
Identification. 13-101
Parts and Applicability 13-101
Procedure 13-101
13-34 Option 061/062 - Port 1 Source Modules - Removing 13-103
Use 13-103
Identification. 13-103
Parts and Applicability 13-104
Procedure 13-104
13-35 Option 061/062 - Port 1 Source Modules - Preparing. 13-106
Preparing the A105 13-106
Preparing the A121 13-106
Preparations Complete 13-106
13-36 Option 061/062 - Port 1 Source Modules - Installing 13-107
Identification. 13-107
Parts and Applicability 13-107
Procedure 13-107
13-37 Option 062 - Port 2 Source Modules - Removing 13-109
Use 13-109
Identification. 13-109
Parts and Applicability 13-110
Procedure 13-110
13-38 Option 062 - Port 2 Source Modules - Preparing 13-113
Use 13-113
Preparing the A107 13-113
Preparing the A122 13-113
Preparations Complete 13-113

13-39 Option 062 - Port 2 Source Modules - Installing 13-114
Identification 13-114
Parts and Applicability 13-114
Procedure 13-114
13-40 RF Deck Bottom Side - Port Group Modules - Completion 13-116
Use 13-116
Procedure 13-116

Chapter 14 — RF Deck Removal and Installation

14-1 Introduction 14-1
RF Deck Top Side Modules 14-1
Accessing Other Components and Assemblies 14-1
14-2 Typical RF Deck Assembly – RF Deck Top Side 14-2
14-3 Remove the RF Deck 14-4
Applicability and Recommended Fixture 14-4
Recommended Fixture 14-4
Procedure 14-4
14-4 Install the RF Deck 14-12
Applicability and Recommended Fixture 14-12
Procedure 14-12

Chapter 15 — RF Deck Top Side Modules

15-1 Introduction 15-1
RF Deck Top Right Side Modules 15-1
RF Deck Top Side Attenuators 15-1
Sampler/LO Distribution Module Assembly 15-1
15-2 Top Side Right Modules Overview 15-2
Applicability 15-2
Module Locations 15-2
RF Deck - Top Right Side Modules 15-2
15-3 Replace the A113 5-20 GHz Doubler Module 15-5
Part and Applicability 15-5
Identification 15-6
Procedure 15-7
15-4 Replace the A115 Low Band Transfer Switch Module 15-9
Part and Applicability 15-9
Identification 15-9
Procedure 15-10
15-5 Replace the A116/A117 Low Band Bridge Module 15-12
Parts and Applicability 15-12
Identification 15-12
Procedure 15-13
15-6 RF Deck Attenuator Overview 15-16

15-7 Replace the Low Band Source Attenuator 15-18
Identification - Option 061 Low Band Attenuators - RF Deck Top Side 15-19
Identification - Option 062 Low Band Attenuators - RF Deck Top Side 15-20
Parts and Applicability 15-21
Procedure 15-21
15-8 SLODM Overview 15-26
Introduction to the SLODM Assembly 15-26
SLODM Assembly Configuration Variants 15-26
15-9 Identification of SLODM Assembly Variants 15-29
SLODM Assembly – 62084 B – Components 15-29
SLODM Assembly – 62084 B – Exploded View 15-31
SLODM Assembly – 62084 C – Components 15-33
SLODM Assembly – 73231 A – Components 15-35
SLODM Assembly – 62084 D – Components 15-37
SLODM Assembly – 73231 B – Components 15-39
15-10 Remove the Sampler/LO Distribution Module Assembly 15-41
Parts and Applicability 15-41
Procedure 15-41
15-11 Remove the A130, A131, and/or A132 LO Coupler Modules 15-44
Parts and Applicability 15-44
Identification – A130 LO Coupler Module 15-45
Identification – A131 and A132 LO Coupler Modules 15-46
Procedure 15-47
15-12 Replace the A130, A131, and/or A132 LO Coupler Modules 15-49
Parts and Applicability 15-49
Identification 15-49
Procedure 15-49
15-13 Remove the A100, A101, A102, and/or A103 Sampler Modules 15-51
Parts and Applicability 15-51
Identification – A100, A101, A102, A103 15-52
Procedure 15-53
15-14 Install the A100, A101, A102, and/or the A103 Sampler Module 15-55
Parts and Applicability 15-55
Identification – A100, A101, A102, A103 15-55
Procedure 15-55
15-15 Replace the A111 LO Distribution Module – ND73193 – 72440 15-57
Parts and Applicability 15-57
Identification – A111 – ND73193 – 72440 15-58
Procedure 15-59
15-16 Replace the Obsolete A111 LO Distribution Module – ND70081 – 66270 15-61
Parts and Applicability 15-61
Identification – A111 – ND70081 – 66270 15-62
Procedure 15-64

15-17 Install the SLODM onto the RF Deck 15-66
Prior Procedures 15-67
Procedure 15-67

Chapter 16 — Rear Panel Components

16-1 Introduction 16-1
16-2 Parts and Applicability 16-1
16-3 Remove the Rear Panel Assembly 16-2
Identification 16-3
Procedure 16-10
16-4 Remove the A17 Rear Panel PCB Assembly 16-15
Part and Applicability 16-15
Procedure 16-15
16-5 Prepare the Replacement A17 Rear Panel PCB Assembly 16-17
16-6 Install the A17 Rear Panel PCB Assembly 16-17
Part and Applicability 16-17
Identification 16-17
Procedure 16-17
16-7 Remove the Rear Panel Fan Assembly 16-19
Part and Applicability 16-19
Identification 16-19
Procedure 16-19
16-8 Preparing the Replacement Rear Panel Fan 16-20
Procedure 16-20
16-9 Install the Rear Panel Fan Assembly 16-21
Procedure 16-21
16-10 Installing the Rear Panel Assembly 16-22
Identification 16-22
Procedure 16-22

Chapter 17 — Power Supply Module

17-1 Introduction 17-1
17-2 Power Supply Module Overview 17-1
Parts and Applicability 17-1
Identification - Location 17-2
Identification – Phase 1 Power Supply Module – ND70072 – 62088 17-4
Identification – Phase 2 Power Supply Module – ND73933 – 71995 17-7
Identification - AC Line Input Module Connections 17-11
17-3 Remove the Power Supply Module 17-12
Parts and Applicability 17-12
Procedure 17-12
17-4 Prepare the Replacement Power Supply Module 17-16
Procedure 17-16
17-5 Install the Power Supply Module 17-17
Procedure 17-17

Chapter 18 — Digital PCB Fan Assembly

18-1 Introduction 18-1
Digital PCB Fan Assembly Removal 18-1
Digital PCB Fan Assembly Power Connector 18-1
Digital PCB Fan Assembly Replacement Preparation Procedure 18-1
18-2 Remove the Digital PCB Fan Bracket/Card Guide Assembly 18-2
Part and Applicability 18-2
Identification 18-3
Procedure 18-4
18-3 Prepare the Replacement Digital PCB Fan Assembly 18-18
18-4 Install the Digital Fan Bracket Card Guide Assembly 18-23
Procedure 18-23

Chapter 19 — MB1 and MB2 PCB Replacement Procedures

19-1 Introduction 19-1
19-2 Phase 1 – MB2 PCB Assembly – ND70070 – 61923-3 19-4
19-3 Phase 2 – MB2 PCB Assembly – ND73878 – 3-72813-3 19-8
19-4 Remove the Motherboard 2 PCB Assembly 19-12
19-5 Prepare the Replacement Motherboard 2 PCB Assembly 19-14
19-6 Install the Motherboard 2 PCB Assembly 19-14
Procedure 19-14
19-7 Motherboard 1 PCB Assembly – ND70069 – 61920-3 19-16
19-8 Remove the MB1 PCB Assembly – ND70069 – 61920-3 19-18
19-9 Prepare the Replacement Motherboard 1 PCB Assembly 19-20
19-10 Install the Motherboard 1 PCB Assembly 19-20
Part and Applicability 19-20
Procedure 19-20

Appendix A — Front and Rear Panel Reference

A-2 Front Panel Touch Screen A-1
A-3 Front Panel Hard Keys and Connectors A-2
Front Panel Hard Key and Connector Description A-5
A-4 Rear Panel Ports and Connectors A-13
Rear Panel Port and Connector Descriptions A-16
A-5 External I/O Port Pinout A-26

Appendix B — Recommended VectorStar Maintenance Fixtures

B-1 Introduction to Fixtures B-1
B-2 T3545 RF Deck Fixture B-1

Appendix C — Full Disassembly Procedure

C-1 Introduction C-1

C-2 Full Disassembly Procedures . . . C-1
Disassembly into Main Assemblies . . . C-1
Covers and Handles . . . C-1
Front Panel Removal . . . C-1
Rear Panel Removal . . . C-2
Printed Circuit Boards – Top Side and Right Side . . . C-2
RF Deck Tray – Bottom Side . . . C-2
Printed Circuit Board – Top Side . . . C-2
C-3 Disassembly Overview for Individual Components . . . C-4
SATA Hard Disk Drive . . . C-4
A11 IF Band Module . . . C-4
A13 Source Module . . . C-4
A15 Low Band Receiver Module . . . C-4
Power Supply Module . . . C-4
Rear Panel . . . C-5
Digital and Analog Fan Assemblies . . . C-5
A3 Single Board Computer (SBC) PCB Assembly . . . C-5
A6 cPCI-PMC Adapter Card PCB Assembly . . . C-5
RF Deck Disassembly . . . C-6

Appendix D — Test Record

D-1 Introduction . . . D-1
D-2 Log Magnitude Dynamic Accuracy . . . D-2
MS4640A Log Magnitude Dynamic Accuracy Test . . . D-2
D-3 MS4640A Log Magnitude Dynamic Accuracy Test Record . . . D-3
MS4640A Log Magnitude Dynamic Accuracy Test Worksheet . . . D-3

Appendix E — VectorStar Technical Data Sheet

E-1 Introduction . . . E-1
E-2 VectorStar Technical Data Sheet . . . E-1

Appendix F — Glossary

F-1 Introduction . . . F-1
F-2 Glossary and Abbreviations . . . F-1

Appendix G — Cabling Tables

G-1 Introduction . . . G-1
G-2 Identification . . . G-1
G-3 Cable Cross Reference Tables . . . G-1
G-4 Notes to Cable Cross Reference Tables . . . G-1
G-5 VectorStar MS4640A VNA Cables by Part Number . . . G-3
G-6 VectorStar MS4640A VNA Cables by Origin . . . G-9
G-7 VectorStar Cables by Destination . . . G-16

Subject Index 1

List of Figures

Chapter 1 — General Information

Figure 1-1. VectorStar MS4647A VNA Front Panel – Equipped with Option 062. 1-2
Figure 1-2. Typical VectorStar VNA Rear Panel – Equipped with Option 062 1-3

Chapter 2 — Replaceable Parts

Figure 2-1. Model Identity Label – 3-60124-XX and Front Panel 2-18
Figure 2-2. VNA Major Internal Assemblies – Phase 1 VNA Shown 2-19
Figure 2-3. Digital PCB Locations – Phase 1 VNAs 2-21
Figure 2-4. Digital PCB Locations – Phase 2 VNAs 2-23
Figure 2-5. A3 Single Board Computer and A4 USB Controller PCB Assemblies 2-26
Figure 2-6. A6 cPCI-PMC Adapter, A7 Graphics Adapter, and A8 GPIB Module PCBs 2-27
Figure 2-7. A10 DSP Module PCB Assembly – ND70066 – 61933-3. 2-28
Figure 2-8. Carrier Board PCB Assembly – ND73874 – 3-72444-3 - PCB Front Side 2-31
Figure 2-9. Carrier Board PCB Assembly – ND73874 – 3-72444-3 - PCB Back Side 2-33
Figure 2-10. A11 IF Band, A13 Source, and A15 Low Band Receiver Module Assemblies 2-34
Figure 2-11. A11 IF Band Module – ND70076 – 62080 2-35
Figure 2-12. A13 Source Module – ND70077 – 62082 or ND73202 – 62082-1 2-36
Figure 2-13. A15 Low Band Receiver Module PCB Assembly – ND70075 – 62079 2-37
Figure 2-14. Phase 1 Front Panel Assembly – Cable Connections to MB2 PCB 2-39
Figure 2-15. Phase 1 – Motherboard 2 PCB Assembly – Front Connectors Detail 2-40
Figure 2-16. Phase 1 – Motherboard 2 PCB Assembly – ND70070 – 61923-3 – Front 2-41
Figure 2-17. Phase 2 Front Panel Assembly – Cable Connections to MB2 PCB 2-42
Figure 2-18. Phase 2 Motherboard 2 PCB Assembly – ND73878 – 3-72813-3 – Front 2-43
Figure 2-19. MS4642A 20 GHz VNA - RF Deck - A18 Module and PCB 2-45
Figure 2-20. MS4644A 40 GHz VNA - RF Deck - A18 Modules and PCB 2-46
Figure 2-21. MS4645A 50 GHz and MS4647A 70 GHz VNAs - RF Deck - A18 PCB Modules 2-47
Figure 2-22. RF Deck Bottom Side Modules - MS4647A with Option 080/081 2-48
Figure 2-23. RF Deck Bottom Side Modules - MS4647A with Option 062 Shown 2-49
Figure 2-24. RF Deck Top Right Side Modules – A113, A115, A116, and A117 2-52
Figure 2-25. RF Deck Top Side Modules – Option 061 – Loops and Two Attenuators 2-54
Figure 2-26. RF Deck Top Side Modules – Option 062 – Loops and Four Attenuators 2-56
Figure 2-27. SLODM Assembly – 62084 B – Components 2-57
Figure 2-28. SLODM Assembly – 62084 B – Exploded View 2-59
Figure 2-29. SLODM Assembly – 62084 C – Components 2-61
Figure 2-30. SLODM Assembly – 73231 A – Components – MS4647A with Option 080/081 2-63
Figure 2-31. SLODM Assembly – 62084 D – Components 2-65
Figure 2-32. SLODM Assembly – 73231 B – Components – MS4647A with Option 080/081 2-67
Figure 2-33. Rear Panel Assembly - In Chassis Covers Off. 2-70
Figure 2-34. Rear Panel - A17 Rear Panel PCB Assembly – ND70067 – 62086. 2-72
Figure 2-35. Rear Panel – Inside Connections and Assemblies. 2-74
Figure 2-36. Phase 1 Power Supply Assembly – ND70072 – 62088 2-76
Figure 2-37. Phase 2 – Power Supply Module and Harnesses – ND73933 – 71955 2-78
Figure 2-38. Motherboard 1 (MB1) PCB Assembly – Phase 1 / Phase 2 MB2 PCBs 2-80
Figure 2-39. Phase 1 Motherboard 2 PCB Assembly – ND70070 – 61923-3 – Connectors 2-83
Figure 2-40. Phase 1 Motherboard 2 PCB Assembly – ND70070 – 61923-3 – Front 2-85
Figure 2-41. Phase 2 Motherboard 2 PCB Assembly – ND73878 – 3-72813-3 – Connectors 2-87
Figure 2-42. Phase 2 Motherboard 2 PCB Assembly – ND73878 – 3-72813-3 – Front 2-89
Figure 2-43. Motherboard 1 PCB Assembly – ND70069 – 61920-3. 2-90
Figure 2-44. Digital PCB Fan Assembly – Major Component Location – Rear View 2-92

Chapter 3 — Performance Verification

Figure 3-1. Process for Creation and Use of a Verification Kit 3-5
Figure 3-2. Test Setup for MS4642A and MS4644A VNAs 3-12
Figure 3-3. Test Setup for MS4645A and MS4647A VNAs 3-13

Chapter 4 — Troubleshooting

Figure 4-1. Main Display Status Bar Location. 4-3
Figure 4-2. SYSTEM Menu. 4-6
Figure 4-3. SELF TEST Dialog Box Before and After Test. 4-6
Figure 4-4. Blocking Under Instrument with Cover and Front Panel Off. 4-9
Figure 4-5. Motherboard 2 PCB Assembly P93 and P94 Connectors – Phase 1 Example 4-10
Figure 4-6. P93 and P94 Power Connectors – Phase 1 Motherboard 2 PCB Assembly 4-12
Figure 4-7. P93 and P94 Power Connectors – Phase 2 Motherboard 2 PCB Assembly 4-13
Figure 4-8. Schematic – P93 Power Supply Control Connector – Front Panel Standby Voltage . . . 4-14
Figure 4-9. Flow Chart for Troubleshooting Power-Up Problems 4-20
Figure 4-10. Flow Chart for Troubleshooting Boot-Up Problems 4-21
Figure 4-11. Flow Chart for Troubleshooting RF Section Problems – Start – Part 1 of 7 4-23
Figure 4-12. Flow Chart for Troubleshooting RF Section Problems - Link A – Part 2 of 7 4-24
Figure 4-13. Flow Chart for Troubleshooting RF Section Problems - Link B – Part 3 of 7 4-25
Figure 4-14. Flow Chart for Troubleshooting RF Section Problems - Link C – Part 4 of 7 4-26
Figure 4-15. Flow Chart for Troubleshooting RF Section Problems - Link D – Part 5 of 7 4-27
Figure 4-16. Flow Chart for Troubleshooting RF Section Problems - Link E – Part 6 of 7 4-28
Figure 4-17. Flow Chart for Troubleshooting RF Section Problems - Link F – Part 7 of 7 4-29

Chapter 5 — Adjustment Procedures

Figure 5-1. Password to Enter Diagnostics. 5-7
Figure 5-2. DIAGNOSTICS Menu. 5-8
Figure 5-3. HARDWARE CAL Menu. 5-9
Figure 5-4. FACTORY CAL Menu. 5-10
Figure 5-5. 10 MHz Calibration - Automatic 5-11
Figure 5-6. 10 MHz Calibration - Manual Method 5-12
Figure 5-7. Src (Source) Pretune Calibration Progress Dialog Box 5-13
Figure 5-8. LO LEVEL CAL Menu and High Band Rev (VS) Setting 5-15
Figure 5-9. Src LO Level Cal (Low Band) Calibration Dialog Box. 5-16
Figure 5-10. J4, J6, and J14 Connector Locations – A13 RF Source Module 5-17
Figure 5-11. High Band LO Cal Point for a2 on the A103 Sampler J2 connector. 5-19
Figure 5-12. A103 a2 Sampler V Connector Location 5-21
Figure 5-13. Src LO Level Cal (High Band) Calibration Dialog Box 5-23
Figure 5-14. Location of Low Band DAC values that require modification 5-25
Figure 5-15. TRACE LAYOUT Menu 5-30
Figure 5-16. Location of High Band DAC values that require modification. 5-31
Figure 5-17. SQM Power Cal Dialog Box 5-33
Figure 5-18. Location of A114 SQM J1 Input Connector 5-34
Figure 5-19. ALC Cal Menu 5-36
Figure 5-20. ALC OFFSET CAL Dialog Box. 5-37
Figure 5-21. PORT 1 ALC CAL (FULL BAND) Dialog Box. 5-38
Figure 5-22. Port 2 ALC Calibration 5-39
Figure 5-23. Analog In Calibration Progress Dialog Box. 5-40
Figure 5-24. Factory RF Cal Setup Dialog Box. 5-41
Figure 5-25. Factory RF Cal Dialog Box. 5-42
Figure 5-26. Factory Receiver Calibration Dialog Box 5-44
Figure 5-27. Hampshire TSHARC Control Panel 5-45
Figure 5-28. Hampshire TSHARC Control Panel - Calibration Tab 5-46
Figure 5-29. Hampshire TSHARC Control Panel, Calibration Options. 5-47

Figure 5-30. Calibration Screen with Target Symbol 5-48
Figure 5-31. Touch Target Movement Verification Screen 5-49
Figure 5-32. Windows Explorer Dialog Box 5-50
Figure 5-33. Install Dialog Box 5-51
Figure 5-34. Open Dialog Box 5-52
Figure 5-35. Highlight the calibration kit component coefficient file 5-53
Figure 5-36. Install Dialog Box 5-53
Figure 5-37. Message Box 5-54

Chapter 6 — Theory of Operation

Figure 6-1. VectorStar MS4640A Series VNA Simplified Block Diagram 6-2
Figure 6-2. Phase 1 MS4640A Series VNA Typical Internal Assemblies and Components. 6-3
Figure 6-3. Functional Block Diagram – Overview of VectorStar MS4640A VNA 6-17
Figure 6-4. Functional Block Diagram – MS4647A Option 062 – Part 1 of 5 6-18
Figure 6-5. Functional Block Diagram – Phase 2 Motherboard 2 PCB. 6-19
Figure 6-6. Functional Block Diagram – MS4647A Option 062 – Part 2 of 5 6-20
Figure 6-7. Functional Block Diagram – MS4647A Option 062 – Part 3 of 5 6-21
Figure 6-8. Functional Block Diagram – MS4647A Option 062 – Part 4 of 5 6-22
Figure 6-9. Functional Block Diagram – MS4647A Option 062 – Part 5 of 5 6-23

Chapter 7 — Replacement Part Groups and Common Procedures

Figure 7-1. Outer Cover Assembly 7-11
Figure 7-2. Inner Cover – Front/Rear Orientation – Location of Screws. 7-13
Figure 7-3. Front Cover Orientation 7-17

Chapter 8 — External Component Procedures

Figure 8-1. Test Port Connectors and Related Hardware. 8-2
Figure 8-2. Solid State Drive (left) and Hard Disk Drive (right) 8-6

Chapter 9 — Remove and Install Digital/Analog PCBs

Figure 9-1. Digital PCB Locations – Phase 1 VNAs 9-3
Figure 9-2. Digital PCB Locations – Phase 2 VNAs 9-5
Figure 9-3. Phase 1 – A3 Single Board Computer and A4 USB Controller PCB Assemblies 9-9
Figure 9-4. Phase 1 – A6 cPCI-PMC Adapter, A7 Graphics Adapter, and A8 GPIB Module PCBs. 9-12
Figure 9-5. Phase 2 – Carrier Board PCB Assembly – ND73874 – 3-72444-3 – Front 9-17
Figure 9-6. Phase 1 – Carrier Board PCB Assembly – ND73874 – 3-72444-3 – Back 9-19
Figure 9-7. A11 IF Band, A13 Source, and A15 Low Band Receiver Module PCB Assemblies. . . . 9-26
Figure 9-8. A11 IF Band Module – ND70076 – 62080 – Connectors 9-27
Figure 9-9. A13 Source Module – ND70077 – 62082 or ND73202 – 62082-1 – Connectors. 9-29
Figure 9-10. A15 Low Band Receiver Module – ND70075 – 62079 – Connectors. 9-30

Chapter 10 — Front Panel Assembly

Figure 10-1. Phase 1 Front Panel Assembly 10-4
Figure 10-2. Blocking Under Instrument with Cover and Front Panel Off – Phase 1 Shown 10-5
Figure 10-3. Phase 1 Front Panel Cable Connections 10-7
Figure 10-4. Phase 1 Front Panel Cable Connectors - Close-up Diagram. 10-8
Figure 10-5. Phase 1 Motherboard 2 PCB Assembly – ND70070 – 61923-3 – Front 10-9
Figure 10-6. Phase 2 Front Panel Assembly - Open with cable connections. 10-13
Figure 10-7. Phase 2 Motherboard 2 PCB Assembly – ND73878 – 3-72813-3 – Front Detail. . . . 10-14
Figure 10-8. Model Identity Label – 3-60124-XX and Front Panel 10-17

Chapter 11 — RF Deck Module Replacement Overview

Figure 11-1. Typical Sampler/LO Distribution Module Assembly - Phase 1 Shown 11-3

Figure 11-2. RF Deck Top Right Side Modules - A113, A115, A116, and A117. 11-5
Figure 11-3. MS4640A - RF Deck Top Side Rear Attenuators - Option 061 11-8
Figure 11-4. MS4640A - RF Deck Top Side Rear Attenuators - Option 062 11-9
Figure 11-5. MS4642A 20 GHz VNA - RF Deck Bottom Side - A18 Modules and PCB 11-12
Figure 11-6. MS4644A 40 GHz VNA - RF Deck Bottom Side - A18 Modules and PCB 11-13
Figure 11-7. MS4645A / MS4647A VNAs - RF Deck Bottom Side - A18 Modules and PCB 11-14
Figure 11-8. MS4642A - Standard No Options - RF Deck Bottom Side - Port Group Modules . . . 11-21
Figure 11-9. MS4644A - Standard No Options - RF Deck Bottom Side - Port Group Modules . . . 11-23
Figure 11-10. MS4645A/MS4647A - Standard - RF Deck Bottom Side - Port Group Modules . . . 11-25
Figure 11-11. MS4645A / MS4647A - Option 051 - RF Deck Bottom Side - Port Group Modules . 11-27
Figure 11-12. MS4645A / MS4647A - Option 061 - RF Deck Bottom Side - Port Group Modules . 11-29
Figure 11-13. MS4645A / MS4647A - Option 062 - RF Deck Bottom Side - Port Group Modules . 11-31

Chapter 12 — RF Deck Bottom Side A18 Modules and PCB

Figure 12-1. MS4642A 20 GHz VNA - RF Deck - A18 Module and PCB 12-3
Figure 12-2. MS4644A 40 GHz VNA - RF Deck - A18 Modules and PCB 12-4
Figure 12-3. MS4645A 50 GHz and MS4647A 70 GHz VNAs - RF Deck - A18 PCB Modules 12-5
Figure 12-4. RF Deck Bottom Side Modules - MS4647A with Option 080/081. 12-6
Figure 12-5. A114 Switched Quadrupler Module (A114 SQM) and Bracket Assembly 12-13
Figure 12-6. A108 HBTS/VITS General Removal Procedure 12-16
Figure 12-7. A18 RF Control PCB Assembly – ND70068 – 61929-3 12-25

Chapter 13 — RF Deck Bottom Side Port Modules

Figure 13-1. MS4642A - Standard No Options - Test Port Group Modules 13-7
Figure 13-2. MS4644A - Standard No Options - Test Port Group Modules 13-9
Figure 13-3. MS4645A / MS4647A - Standard No Options - Test Port Group Modules. 13-11
Figure 13-4. MS4645A / MS4647A - Option 051 - Front Panel Loops 13-13
Figure 13-5. MS4645A / MS4647A - Option 061 - Loops and Two Attenuators 13-15
Figure 13-6. MS4645A / MS4647A - Option 062 - Loops and Four Attenuators. 13-17
Figure 13-7. Test Port 2 - Module Group Assembly - A119, A129, and A106 13-19
Figure 13-8. A106 and A107 Reference Coupler Modules and Mounting Brackets 13-21
Figure 13-9. A110 Port 2 Level Detector and A109 Port 1 Level Detector Modules. 13-23
Figure 13-10. Test Port 1 Module Group - A118, A128, and A104. 13-25
Figure 13-11. Option 061 - A123 Port 2 b2 and A121 Port 1 Source Attenuators 13-38
Figure 13-12. Option 062 - A123, A122, A121, and A120 Attenuators. 13-40
Figure 13-13. High Band Step Attenuator - Bracket Orientation and Assembly 13-48
Figure 13-14. Side-Attached Modules - MS4642A - Standard No Options. 13-54
Figure 13-15. Side-Attached Modules - MS4644A - Standard No Options. 13-55
Figure 13-16. Side-Attached Modules - MS4645A / MS4647A - Standard No Options 13-56
Figure 13-17. Side-Attached Modules - MS4640A - Option 051/061/062 - MS4647A Shown 13-57
Figure 13-18. Identification - Standard No Options - Test Port 2 Modules 13-63
Figure 13-19. Identification - Standard No Options - Test Port 1 Modules 13-72
Figure 13-20. Identification - Option 051/061/062 - Test Port 2 Modules 13-80
Figure 13-21. Identification - Option 051 - Port 1 Source Modules. 13-86
Figure 13-22. Identification - Option 051/061/062 - Test Port 1 Modules 13-92
Figure 13-23. Identification - Option 051/061 - Port 2 Source Modules 13-98
Figure 13-24. Identification - Option 061 - Port 1 Source Modules. 13-103
Figure 13-25. Identification - Option 062 - Port 2 Source Modules. 13-109

Chapter 14 — RF Deck Removal and Installation

Figure 14-1. Typical RF Deck Removed - Option 061 Loops & Two Attenuators Shown. 14-2
Figure 14-2. RF Deck Removal/Installation - Analog Modules and Semi-Rigid Coaxial Cables. . . . 14-5
Figure 14-3. RF Deck Top Side - Sampler/LO Distribution Module - MCX Coaxial Cables 14-7
Figure 14-4. RF Deck Bottom Side - Cables and Mounting Hardware 14-9

Chapter 15 — RF Deck Top Side Modules

Figure 15-1. RF Deck Top Right Side Modules – A113, A115, A116, and A117 15-3
Figure 15-2. A113 5-20 GHz Doubler Module – ND70080 – 64920 – Detail 15-6
Figure 15-3. A115 Low Band Switch Module – ND70079 – 64016. 15-9
Figure 15-4. A116/A117 Low Band Bridge Module – ND70078 – 64016 – Detail 15-12
Figure 15-5. RF Deck Top Side Modules – Option 061 – Loops & Two Attenuators 15-19
Figure 15-6. RF Deck Top Side Modules – Option 062 – Loops & Four Attenuators. 15-20
Figure 15-7. Low Band Step Attenuator, Bracket, and Harness Assembly 15-23
Figure 15-8. SLODM Assembly – 62084 B – Components 15-29
Figure 15-9. SLODM Assembly – 62084 B – Exploded View. 15-31
Figure 15-10. SLODM Assembly – 62084 C – Components 15-33
Figure 15-11. SLODM Assembly – 73231 A – Components – MS4647A Option 080/081. 15-35
Figure 15-12. SLODM Assembly – 62084 D – Components 15-37
Figure 15-13. SLODM Assembly – 73231 B – Components – MS4647A Option 080/081. 15-39
Figure 15-14. SLODM Assembly and RF Deck Disassembly/Assembly 15-42
Figure 15-15. A130 LO Coupler Module – ND70083 – 68848 – Detail. 15-45
Figure 15-16. A131-A132 LO Coupler Module – No ND – 70685 – Detail 15-46
Figure 15-17. A100, A101, A102, A103 Sampler Module – ND70082 – 64180 – Detail 15-52
Figure 15-18. A111 LO Distribution Module Assembly – ND73193 – 72440 – Detail. 15-58
Figure 15-19. A111 LO Distribution Module Assembly – ND70081 – 66270 – Detail. 15-62
Figure 15-20. Installing the Sampler/LO Distribution Module Assembly. 15-66

Chapter 16 — Rear Panel Components

Figure 16-1. Rear Panel Assembly – Outside – Panel Attached with Covers Off. 16-3
Figure 16-2. Rear Panel Assembly – Inside – A17 PCB Cable Connections 16-5
Figure 16-3. Rear Panel Assembly – Outside – A17 PCB and Fan Mounting Hardware 16-7
Figure 16-4. Rear Panel Assembly – Inside View – Cable Connections 16-9
Figure 16-5. Remove or Install the Rear Panel Sub Plate 16-11
Figure 16-6. Remove or Install the Rear Panel Assembly 16-13

Chapter 17 — Power Supply Module

Figure 17-1. Power Supply Module Location and Orientation – Phase 1 VNA Shown 17-2
Figure 17-2. Phase 1 Power Supply Module Assembly – ND70072 – 62088. 17-4
Figure 17-3. Phase 1 Power Supply Module Wiring Harness Connections 17-6
Figure 17-4. Phase 2 Power Supply Module Assembly – ND73933 – 71995. 17-7
Figure 17-5. Phase 2 Power Supply Module Wiring Harness Connections 17-9
Figure 17-6. Power Supply Module Assembly – AC Line Module Connections 17-11
Figure 17-7. Location of Left Side Screw and Rear Panel Screws. 17-13

Chapter 18 — Digital PCB Fan Assembly

Figure 18-1. Digital PCB Fan Assembly – ND70073 – 62095-1 – Detail 18-3
Figure 18-2. Digital PCB Fan Assembly – Chassis Location – Phase 1 Example 18-4
Figure 18-3. Digital PCB Fan Assembly – Major Component Location – Rear View 18-6
Figure 18-4. Digital PCB Fan Assembly – Removing Rear Panel Sub Plate 18-10
Figure 18-5. Remove or Install the Rear Panel Assembly 18-11
Figure 18-6. Remove or Install the Instrument Chassis Left Side Plate 18-13
Figure 18-7. Remove or Install the Power Supply Module Assembly. 18-14
Figure 18-8. Disconnect or Connect the Power Supply Module Ground Cables 18-15
Figure 18-9. Remove or Install the DC Fan Bracket/Card Guide Assembly. 18-16
Figure 18-10. Digital PCB Fan Bracket/Card Guide Assembly. 18-17
Figure 18-11. Card Guide Assembly After Removing the Fan and Fan Bracket 18-18
Figure 18-12. Remove or Install the Digital PCB Fan on the Fan Bracket 18-19
Figure 18-13. Remove or Install the Fan and Digital PCB Fan Bracket 18-21

Chapter 19 — MB1 and MB2 PCB Replacement Procedures

Figure 19-1. Motherboard 1 (MB1) PCB Assembly – Phase 1 / Phase 2 MB2 PCBs. 19-2
Figure 19-2. Phase 1 Motherboard 2 PCB Assembly – ND70070 – 61923-3 – Connectors 19-5
Figure 19-3. Phase 1 Motherboard 2 PCB Assembly – ND70070 – 61923-3 – Front 19-7
Figure 19-4. Phase 2 Motherboard 2 PCB Assembly – ND73878 – 3-72813-3 – Connectors 19-9
Figure 19-5. Phase 2 Motherboard 2 PCB Assembly – ND73878 – 3-72813-3 – Front 19-11
Figure 19-6. Motherboard 1 PCB Assembly – ND70069 – 61920-3 – Replacement 19-16

Appendix A — Front and Rear Panel Reference

Figure A-1. Typical VectorStar MS4640A Series VNA Front Panel A-2
Figure A-2. Typical MS4640A Series Front Panel Hard Keys and Connectors A-3
Figure A-3. Typical MS4640A Series VNA Rear Panel. A-13
Figure A-4. Schematic of typical MS4640A Series VNA Rear Panel Ports and Connectors A-14
Figure A-5. External I/O DB-25P Connector Pinout Diagram A-26

Appendix B — Recommended VectorStar Maintenance Fixtures

Figure B-1. T3545 – RF Deck Maintenance Fixture – 62036 . . . . . B-2

Appendix C — Full Disassembly Procedure

Appendix D — Test Record

Appendix E — VectorStar Technical Data Sheet

Appendix F — Glossary

Appendix G — Cabling Tables

List of Tables

Chapter 1 —General Information
Table 1-1. Recommended Test Equipment 1-8

Chapter 2 —Replaceable Parts
Table 2-1. Notes for All Replacement Part Cross-Reference Tables 2-2
Table 2-2. Replacement Parts - Sorted by Location, RPN, and APN 2-3
Table 2-3. Replacement Parts - Sorted by ERN, Name, and RPN 2-95
Table 2-4. Replacement Parts - Sorted by RPN and APN 2-105
Table 2-5. Replacement Parts - Sorted by APN 2-115

Chapter 3 —Performance Verification
Table 3-1. Required Calibration and Verification Equipment 3-3
Table 3-2. Equipment Required for Automated Test Procedures 3-10
Table 3-3. Required Equipment for Log Magnitude Dynamic Accuracy Test 3-11
Table 3-4. Test Frequency List for Maximum Rated Power Test and Level Accuracy Test 3-26
Table 3-5. Test Frequency List for Frequency Accuracy Test 3-26

Chapter 4 —Troubleshooting
Table 4-1. Status Bar Error Messages 4-4
Table 4-2. Self Test Failure Faults 4-7
Table 4-3. Phase 1 VNA P94 Power Supply Voltage Check 4-15
Table 4-4. Phase 2 VNA P94 Power Supply Voltage Check 4-15
Table 4-5. Frequency Band of Interest for Each VNA Receiver 4-18
Table 4-6. Front Panel Problems and Solutions 4-31
Table 4-7. Rear Panel Problems and Solutions 4-32
Table 4-8. Possible Operating System Software-Related Problems 4-33

Chapter 5 —Adjustment Procedures
Table 5-1. Recommended Test Equipment 5-2
Table 5-2. Required Replacement Assembly Adjustments. 5-4
Table 5-3. High Band LO Level Optimization Set Up 5-30
Table 5-4. Parameter Changes for Factory RF Calibration 5-42

Chapter 6 —Theory of Operation
Table 6-1. Digital Section PCBs and Assemblies 6-10

Chapter 7 —Replacement Part Groups and Common Procedures

Chapter 8 —External Component Procedures

Chapter 9 —Remove and Install Digital/Analog PCBs

Chapter 10 —Front Panel Assembly

Chapter 11 —RF Deck Module Replacement Overview
Table 11-1. RF Deck A18 PCB Modules by Instrument Model Number 11-11
Table 11-2. Port Module Groups by Instrument Model and Equipped Option 11-17
Table 11-3. Port Modules - Standard No Options - RF Deck Bottom Side 11-34

Table 11-4. Port Modules - Option 051 Loops - RF Deck Bottom Side 11-36
Table 11-5. Port Modules - Option 061 Loops & Two Attenuators - RF Deck Bottom Side 11-37
Table 11-6. Port Modules - Option 062 Loops & Four Attenuators - RF Deck Bottom Side 11-39

Chapter 12 —RF Deck Bottom Side A18 Modules and PCB
Table 12-1. RF Deck A18 Modules by Instrument Model Number 12-2

Chapter 13 —RF Deck Bottom Side Port Modules
Table 13-1. MS4642A / MS4644A - Replacement Procedures - By Option, Port, and Module . . . 13-27
Table 13-2. MS4645A / MS4647A - Replacement Procedures - By Option, Port, and Module . . . 13-32
Table 13-3. High Band Attenuator Reference and Procedure Cross References. 13-42

Chapter 14 —RF Deck Removal and Installation

Chapter 15 —RF Deck Top Side Modules
Table 15-1. RF Deck - Attenuator Modules - Configuration Summary 15-16
Table 15-2. SLODM Assembly Component Variants 15-27

Chapter 16 —Rear Panel Components

Chapter 17 —Power Supply Module

Chapter 18 —Digital PCB Fan Assembly

Chapter 19 —MB1 and MB2 PCB Replacement Procedures

Appendix A — Front and Rear Panel Reference
Table A-1. Front Panel Hard Keys and Functions. A-5
Table A-2. Rear Panel Connectors A-16

Appendix B — Recommended VectorStar Maintenance Fixtures

Appendix C — Full Disassembly Procedure

Appendix D — Test Record
Table D-1. Measured S21 Values and Calculated Step Attenuator Attenuation Values. D-2
Table D-2. Attenuation Calculated Upper Limits, Mean Values, Lower Limits, and Pass/Fail D-3

Appendix E — VectorStar Technical Data Sheet

Appendix F — Glossary

Appendix G — Cabling Tables
Table G-1. Notes to Cable Cross Reference Tables. G-1
Table G-2. VectorStar Internal Cables - Sorted by Part Number G-3
Table G-3. VectorStar Internal Cables - Sorted by Origin, Destination, and Part Number G-9
Table G-4. VectorStar Internal Cables - Sorted by Destination, Origin, and Part Number G-16

Chapter 1 — General Information

1-1 Scope of Manual

This manual provides general service and preventive maintenance information for the Anritsu MS4640A models of Vector Network Analyzers. The information includes replaceable parts information, performance verification tests, adjustment procedures, troubleshooting, theory of operation and block diagrams, and assembly/sub-assembly removal and replacement.

Throughout this manual, the terms “MS4640A” and “VNA” will be used interchangeably to refer to all models of the MS4640A series VNA, unless otherwise noted. The individual VNA models are:

- MS4642A, K Connectors, 10 MHz to 20 GHz
- MS4644A, K Connectors, 10 MHz to 40 GHz
- MS4645A, V Connectors, 10 MHz to 50 GHz
- MS4647A, V Connectors, 10 MHz to 70 GHz

This revision of the Maintenance Manual (MM) incorporates all changes necessary for both Phase 1 and Phase 2 VNAs.

- Phase 1 VNAs have a Serial Number (S/N) of 1132241 and lower.
- Phase 2 VNAs have a S/N of 1133242 and higher.

Where appropriate, other S/N cut over values are listed for other components that were not affected by the phase change above.

1-2 Chapter Introduction

This chapter provides a general description of the MS4640A Series VNA, instrument identification numbers, related manuals and options.

Information is included concerning level of maintenance, replaceable sub-assemblies and RF components, exchange assembly program, and preventive maintenance.

Static-sensitive components handling precautions, Electrostatic discharge protection information, lists of exchangeable sub-assemblies and recommended test equipment are also provided.

1-3 VectorStar MS4640A VNA Description

The MS4640A Series Microwave Vector Network Analyzer (VNA) is an instrument system that contains a built-in source, test set, and analyzer. Test results are displayed real time on a front panel touch screen or also to a separate video monitor. Screen captures can easily be printed or saved in common graphic file formats.

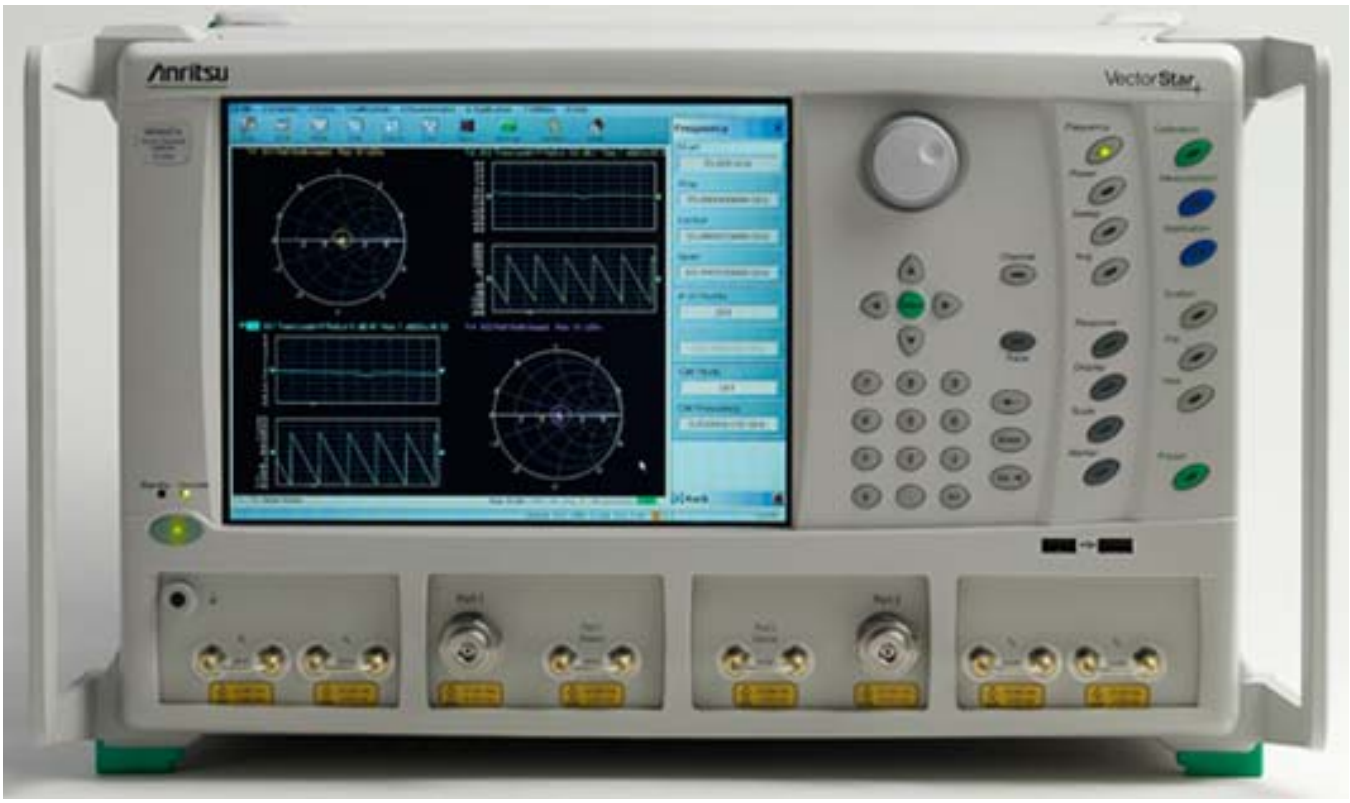

Figure 1-1. VectorStar MS4647A VNA Front Panel – Equipped with Option 062

Depending on the model and installed options, the MS4640A provides a maximum frequency range from 70 kHz to 70 GHz. The instrument can provide either:

- Up to 25,0000 total test points, on up to 16 channels, and each channel with up to 16 trace displays. Each trace display method can be selected from 17 major display types. Most trace display types can have up to 12 regular markers and one reference marker.
- Up to 100,000 total test points, with one channel with up to 16 trace displays. Each trace display method can be selected from 17 major display types. Most trace display types can have up to 12 regular markers and one reference marker.

Figure 1-2. Typical VectorStar VNA Rear Panel – Equipped with Option 062

Available Models

The MS4640A Series VNA instrument is available in four models with different frequency range capabilities:

- MS4642A - 10 MHz to 20 GHz - with two K (m) connector test ports
- MS4644A - 10 MHz to 40 GHz - with two K (m) connector test ports
- MS4645A - 10 MHz to 50 GHz - with two V (m) connector test ports
- MS4647A - 10 MHz to 70 GHz - with two V (m) connector test ports

Included Materials

Each instrument includes:

- CD with technical publications and manuals in PDF format and miscellaneous software utilities
- USB optical mouse
- Power cord

Available Options

The instrument is available with multiple options, calibration kits, performance verification kits, and AutoCal modules. The main system options are:

- MS4640A-001 – Rack Mount
- MS4640A-002 – Time Domain

- MS4640A-004 – Replacement Solid State Drive (SSD) / Hard Disk Drive (HDD)
  - SSDs are equipped on VNAs with S/N 1133242 and higher.
  - HDDs are equipped on VNAs with S/N 1132241 and lower.
- MS4640A-007 – Receiver Offset
- MS464xA-051 – Front Panel Direct Access Loops
  - Select either Standard No Options or only Option 051 or Option 061 or Option 062.
- MS464xA-061 – Active Measurements Suite, with 2 Step Attenuators
- MS464xA-062 – Active Measurements Suite, with 4 Step Attenuators
- MS4640A-070 – 70 kHz Low-End Frequency Extension
  - When Option 070 – 70 kHz Low-End Frequency Extension is added, the low end frequency is specified to 70 kHz and allowed to go to 40 kHz.
- MS4647A-080 – Broadband System Option for MS4647A VNAs without Option 051, 061, or 062
- MS4647A-081 – Broadband System Option for MS4647A VNAs with Option 051, 061, or 062.

For a complete description of available options and their part numbers, refer to the:

- **VectorStar MS4640A Series VNA Configuration Guide and Technical Data Sheet – 11410-00432**.

Identification Number

All Anritsu MS4640A instruments are assigned a six- or seven-digit ID number (Serial Number), such as “085203”. This number appears on a decal affixed to the rear panel.

When ordering parts or corresponding with Anritsu Customer Service, please use this identification number with reference to the specific instrument model number, installed options, and serial number. For example, a MS4647A, Option 062, Option 070, Serial Number 123456.

1-4 Documentation

Online Manuals

This manual is available for download as an Adobe Acrobat Portable Document Format (.pdf) file.

This file can be viewed using Acrobat Reader, a free program that is available from Adobe at: http://www.adobe.com

The file is "linked" such that the viewer can choose a topic to view from the displayed "bookmark" list and "jump" to the manual page on which the topic resides. The text can also be word-searched. Updates to this and other manuals, if any, may also be downloaded from the "Literature" area of the Anritsu Internet site at: http://www.us.anritsu.com

Printed Manuals

Printed versions of most VectorStar VNA manuals (including this manual) are available from Anritsu at a nominal charge. Most printed manuals are available bound in 3-ring binders with tabs.

Related Manuals

This is one of a five document and manual set that consists of the following documents.

- **Configuration Guide and Technical Data Sheet – 11410-00432**

  The technical data sheet (TDS) provides a summary description of the MS4640A Series VNA and detailed specifications for all aspects of the VNA operation. The following topics are specifically covered: system dynamic range, receiver dynamic range, receiver compression, noise floor, high level noise, power range, output power, power accuracy, measurement stability, frequency resolution, accuracy and stability, phase noise, harmonics, port characteristics, measurement uncertainties, standard, calibration, and optional capabilities, connector specifications, operating environment requirements, capabilities, calibration capabilities, auto-calibration capabilities, available accessories and options, and summary ordering information.

- **Operation Manual – 10410-00266**

  The operation manual provides information for the installation, setup, initial configuration and operation of the MS4640A. It also provides performance specifications and a full listing of operational and error messages.

- **Programming Manual – 10410-00267**

  The programming manual provides a programming reference and sample scripts for automatic and remote operation for a variety of network configurations. The reference information includes a complete command reference for each supported communication language.

- **Measurement Guide – 10410-00269**

  The measurement guide provides both general overviews of performance verification, calibration, and measurement scenarios for common and unique user requirements. Common calibration methods are described with advantages of each along with sample calibration routines. The use of Anritsu calibration kits is detailed along with how to load calibration characterization data and how to use some kits throughout a complete calibration procedure.

1-5 Basic Maintenance

Cleaning LCD Display Touch Screen

The touch screen is protected by a plastic display filter. To clean the display filter, dampen a soft cloth with a mild soap and water solution. Do not use abrasive cleaners, tissues, or paper towels that can scratch the plastic surface. Gently wipe the display filter to clean.

- Recommended cleaner is Seventh Generation Natural All Purpose Cleaner – 783-1358 or equivalent. Use sparingly and apply only to cloth below.
- Use a soft, clean, lint-free cloth such as those for cleaning computer screens. If liquid cleaner is used, apply it to the cloth and not to the instrument.

Maintain Operating System Integrity

The Microsoft Windows operating system on the MS4640A Series VNA is configured for optimum performance when the instrument leaves the factory. To maintain the system's operating integrity, follow proper Windows shutdown procedure and DO NOT modify the operating system configuration, the firewall settings, the system registry, the hard disk drive partitions, or the Anritsu user accounts.

Antivirus Protection

The MS4640A Series VNA is tested with Trend Micro Internet Security Pro 2009 and 2010 antivirus software, but stability is not guaranteed with all antivirus software. Anritsu recommends connecting the instrument only to a secure network. The user assumes the responsibility to provide virus protection because this is not supplied with the instrument. Contact your network administrator for information about your network security and antivirus protection policies.

Windows OS Updates

Not all Microsoft updates are compatible with the MS4640A Series VNA and, if installed, may affect the performance of the instrument.

Hard Disk Drive Data Backup

Anritsu recommends that you make a backup copy of your critical data stored on the VNA hard disk drive as often as possible.

Note	Anritsu reserves the right to reformat or replace the VNAs hard disk drive as part of the repair. In such incidence, all user data on the hard disk drive will be erased.

Troubleshooting and Repair

The VNA modular design, extensive built-in diagnostics, and automated service tools are designed to support fast exchange of functional assembly level repair. Failed assemblies are not field repairable. Once an assembly is found to be faulty, it should be returned to an authorized Anritsu Service Center for exchange. See the description in Section 2-4 "Exchange Assembly Program" on page 2-1 in Chapter 2 — Replaceable Parts.

The procedures for troubleshooting a failed VNA are described in Chapter 4 — Troubleshooting.

The procedures for replacing a failed part start in Chapter 7 — Replacement Part Groups and Common Procedures.

Internal Hardware Adjustments and Calibrations

Internal hardware calibrations insure accuracy of system frequency and proper compensation, leveling and flatness of system power at the front panel test ports.

To conduct these calibrations, you need only connect the appropriate test equipment (Frequency Counter or power meter) to the VNA rear panel **Dedicated GPIB** port and initiate the calibration. The VNA will control itself and the externally connected test equipment to perform measurements and store calibration constants in its internal memory.

The procedures for adjusting the VNA are described in Chapter 5 — Adjustment Procedures.

System Test/Certification

Quick operational checkout of the system may be accomplished by the system user or for incoming inspection purposes using the "Operational Checkout procedures" in the MS4640A Operation Manual. Those procedures are useful in quickly verifying that the instrument's primary measurement functions are operational and stable.

Verification of the system's measurement accuracy and full operational testing of the system are detailed in Chapter 3 — Performance Verification.

1-6 Performance Specifications

The performance specifications for all MS4640A models are contained in the following data sheet available online at www.anritsu.com.

- **VectorStar MS4640A Series VNA Configuration Guide and Technical Data Sheet – 11410-00432**

1-7 Anritsu Customer Service Centers

For the latest service and sales information in your area, please visit http://www.anritsu.com/Contact.asp. Choose a country for regional contact information.

1-8 Electrostatic Discharge Prevention

All electronic devices, components, and instruments can be damaged by electrostatic discharge. It is important to take preventative measures to protect the instrument and its internal subassemblies from electrostatic discharge.

An ESD safe work area and proper ESD handling procedures that conform to ANSI/ESD S20.20-1999 or ANSI/ESD S20.20-2007 is mandatory to avoid ESD damage when handling subassemblies or components found in the MS4640A instruments.

Prior to connecting an extension cable to the VNA test port, take steps to eliminate the static charges built-up on the cable. This can be done by terminating the open-end of the extension cable with the short from the calibration kit and then grounding the outer conductor of the connector on the cable.

1-9 Recommended Test Equipment

The table below provides a list of recommended test equipment needed for the performance verification, calibration, and troubleshooting procedures presented in this manual.

Table 1-1. Recommended Test Equipment (1 of 2)

Instrument	Critical Specifications	Recommended Manufacturer Model Number	Typical Usage (See Note)
Note Codes for Typical Usage	— "A" = Adjustment/Internal Hardware Calibration — "I" = Instrument Key Parameter Testing — "P" = System Performance Verification — "T" = Troubleshooting		
Frequency Counter	Frequency: 10 MHz Input Impedance: 50 Ohm	Anritsu Model MF2412B	A, I
Frequency Reference	Frequency: 10 MHz	Symmetricom Model RubiSource T&M	A, I
Power Meter	Power Range: –70 to +20 dBm	Anritsu Model ML2438A	A, I
Power Sensor	Frequency: 70 kHz to 70 GHz Connector Type: V	Anritsu Model SC7770	A, I
Adapter	Type: N (m) to K (m)	Anritsu Model 34NK50	A, I
Adapter	Type: N (m) to K (f)	Anritsu Model 34NKF50	A
Adapter	Type: V (f) to K (m) Quantity: 2	Anritsu Model 34VFK50	A
Adapter	Type: V (f) to K (f)	Anritsu Model 34VFKF50	A, I
Adapter	Type: V (f) to V (f) Quantity: 2	Anritsu Model 33VFVF50C	A, I
Adapter	Type: N (m) to V (m)	Pasternack Model PE9718A	A, I
Attenuator	Type: K (m) to K (f) Attenuation: 20 dB	Anritsu Model 43KC-20	A
Attenuator	Type: SMA (m) to SMA (f) Attenuation: 7 dB	Aeroflex/Inmet Model 18B-7	A
Calibration Kit	Connector Type: K	Anritsu Model 3652A-1	A, I, P
Calibration Kit	Connector Type: V	Anritsu Model 3654D-1	A, I, P
Verification Kit	Connector Type: K	Anritsu Model 3668-1	P
Verification Kit	Connector Type: V	Anritsu Model 3669B-1	P
RF Cable	Frequency: DC to 40 GHz Connector Type: K (m) to K (f) Quantity: 2	Anritsu Model 3670K50-2	A, I, P
RF Cable	Frequency: DC to 70 GHz Connector Type: V (m) to V (f)	Anritsu Model 3670V50A-2	A, I, P

Table 1-1. Recommended Test Equipment (2 of 2)

Instrument	Critical Specifications	Recommended Manufacturer Model Number	Typical Usage (See Note)
Note Codes for Typical Usage	— “A” = Adjustment/Internal Hardware Calibration — “I” = Instrument Key Parameter Testing — “P” = System Performance Verification — “T” = Troubleshooting		
Step Attenuator	With traceable Characterization Data	Anritsu Model SC7974	I
Step Attenuator Controller	—	Anritsu Model SC3796	I
Coaxial Cable	Type: BNC (m) to BNC (m) Impedance: 50 Ohm Length: 0.6 meter	Any	A, I
Computer	PC with Windows 7 or Windows XP and National Instruments GPIB hardware and software. The VISA Library must be installed on the hardware.	Any	I, P
GPIB Cable	IEEE 488.2 compliant	Anritsu PN 2100-2	A, I, P
Digital Multimeter	—	Any	T
XGA/VGA Monitor	—	Any	A, I
PC Keyboard	Interface: PS/2 or USB 2.0, US English	Any	A, I
PC Mouse	Interface: PS/2 or USB 2.0	Any	A, I

1-10 Recommended Tools and Supplies

The following tools are recommended for servicing the VectorStar MS4640A Series VNA.

Flat Blade Screwdrivers

- Large flat blade screwdriver
- Medium flat blade screwdriver
- Small flat blade screwdriver

Phillips-Head Screwdrivers

- Medium Phillips-head screwdriver
- Small Phillips-head screwdriver

Torque Wrenches

- 4 mm (5/32") Torque End Wrench set to less than 0.22 N·m (2 lbf·in) – Anritsu 01-511 or equivalent. Used to torque the SSMC connectors on the 3743A Millimeter-Wave Modules that are a component of the ME7838A Broadband/Millimeter-Wave System.
- 6 mm Torque End Wrench set to 0.45 N·m (4 lbf·in) – Anritsu 01-504 or equivalent. Used to torque W1 and similar connectors.
- 6 mm / 7 mm Open End Wrench – Anritsu 01-505 or equivalent. Used to back the torque wrench above.
- 8 mm (5/16") Torque End Wrench set to 0.9 N · m (8 lbf · in) – Anritsu 01-201 or equivalent. For tightening male devices and used to torque the front panel loops, the rear panel loops, and the SMA, 3.5 mm, 2.4 mm, K, and V connectors throughout the chassis and RF Deck.
- 8 mm (5/16") Torque Socket Wrench set to 20 lbf · in – Mountz TB-06004D or equivalent with 8 mm (5/16") socket.
- 1/2" Torque End Wrench – 50 lbf · in – Utica TCI-150RA or equivalent with 1/2" socket. Used to torque the RF Deck Sub Panel Connector nuts.
- 1/2" Torque End Wrench – 60 lbf · in – Mountz MTBN10 or equivalent with 1/2" socket. Used to torque the Test Port Adapters.
- 3/4" Torque End Wrench – 12 lbf · in – Anritsu 01-200 or equivalent.
- 13/16" (20.6 mm) Torque End Wrench – 0.9 N · m (8 lbf · in) – Anritsu 01-203 or equivalent. Used to tighten the VNA test ports to female devices.
- 13/16" (20.6 mm) Torque Socket Wrench – 15 lbf · ft – Craftsman 009-44594 or equivalent with 13/16" deep socket on 3/8" drive. Used to torque the Port Connector Nut to 15 lbf · ft.

Nut Drivers, Hex Drivers, Allen Wrenches, and Ratchet Wrenches

- Nut Driver – M3
- Nut Driver – 1/4"
- Nut Driver – 11/32"
- Nut Driver – 3/16"
- Hex Allen Wrench – 8 mm – T-Handle recommended

End Wrenches

- Universal circular end wrench, for SMA, 3.5 mm, 2.4 mm, K, and V connectors – Anritsu 01-204.
- Open End Wrench – 6 mm
- Open End Wrench – 22 mm
- Open End Wrench – 5/16"

- Open End Wrench – 7/16”
- Open End Wrench – 7/32”

Socket Wrenches and Sockets

- Socket Wrench – 5 mm
- Socket Wrench – 7 mm
- Socket Wrench – 8 mm
- Socket – 1/2” Socket (for 50 lbf · in torque wrench)
- Socket – 13/16” socket with 1/2” drive (for 15 lbf · ft torque wrench)
- Socket – 5/16” Socket (for 20 lbf · in torque wrench)

Pliers and Cutters

- Diagonal wire cutters
- Needle-Nose pliers
- Pliers
- Wire Stripper

Mechanical Alignment and Positioning Tools

- Tweezers – With straight or angled tips such as Aven Model 18426 or Model 18492 or equivalent.
- Solder Aid Spudger – Recommended is Stainless Steel version with both straight and angled tips such as Aven Model 20039 or equivalent.

Cleaning Supplies

- Approved Cleaner – Anritsu 783-1358 or equivalent. Approved cleaner for LCD display, front and rear panels, instrument model identity labels, and instrument external cover.
- Approved Front/Rear Panel Wipes – Anritsu 783-557 or equivalent such as Kimberly-Clark Kimwipes Science Brand #280. Do not use these wipes on the LCD screen. These are the approved wipes for front and rear panels, instrument model identity labels, and instrument external cover.
- LCD Cleaning Cloth – Use a soft, clean, lint-free cloth to clean the LCD screen. If liquid cleaner is used, apply it to the cloth and not the instrument.

Miscellaneous Supplies

- Thread Lock Compound – Anritsu 3-783-79 or equivalent thread lock compound.
- Small ~10 cm (~4”) cable ties – Anritsu 721-2 or equivalent.

1-11 Recommended T3545 RF Deck Fixture

T3545 RF Deck Fixture is used to hold a removed RF Deck (any model, any combination of options) in order to service deck-mounted modules and PCBs. The fixture protects protruding top and bottom loops and attaches to the deck using four (4) M5 × 8 mm screws. If multiple uses are anticipated, obtain Knob Head M5 × 8 mm screws to speed fixture setup.

Fixture specifications are available in Figure B-1, “T3545 – RF Deck Maintenance Fixture – 62036” on page B-2 below in Appendix B — Recommended VectorStar Maintenance Fixtures.

Chapter 2 — Replaceable Parts

2-1 Introduction

This chapter provides replaceable parts information for all MS4640A models. The major replaceable assemblies and parts are listed and their locations are shown in this chapter.

2-2 VectorStar Technical Data Sheet

This and many other documents are available on the Anritsu web site at www.anritsu.com. In the search field, enter “VectorStar” or “MS4640A” to find VectorStar VNA information.

2-3 Cross Reference Tables

Cross reference tables to the replacement parts are available at the end of this chapter with parts sorted by:

- Table 2-1, “Notes for All Replacement Part Cross-Reference Tables” on page 2-2
- Table 2-2, “Replacement Parts - Sorted by Location, RPN, and APN” on page 2-3
- Table 2-3, “Replacement Parts - Sorted by ERN, Name, and RPN” on page 2-95
- Table 2-4, “Replacement Parts - Sorted by RPN and APN” on page 2-105
- Table 2-5, “Replacement Parts - Sorted by APN” on page 2-115

2-4 Exchange Assembly Program

Anritsu maintains a module exchange program for selected subassemblies. If a malfunction occurs in one of these subassemblies, the defective item can be exchanged. Upon receiving your request, Anritsu will ship the exchange subassembly to you. You then have 45 days in which to return the defective item. All exchange subassemblies or RF assemblies are warranted for 90 days from the date of shipment, or for the balance of the original equipment warranty, whichever is longer.

Please have the exact model number and serial number of your unit available when requesting this service, as the information about your unit is filed according to the instrument model and serial number. For more information about this program, contact your local Anritsu Service Center.

2-5 Replaceable Subassemblies and Parts

Note	Most replacement parts are identified by their “ND” part number. For example, the RF Control PCB Assembly is ND70068. In some cases, there is no “ND” number and a multi-digit Anritsu part number is used. For example, the 70 GHz High Band Step Attenuator is part number 66050. Many parts such as PCB and RF Deck module assemblies are also identified by their common engineering “A” references. For the primary printed circuit boards, the official part name is prefaced with the engineering reference “A” number. For example, the aforementioned RF PCB is named the”A18 RF Control PCB Assembly.” If available, all three identifications are listed in this document. For example, the analog section IF Band PCB module is identified as: A11 IF Band Module – ND70076 – 62080.

Notes for Replacement Part Tables

The following notes apply to all replacement part tables in the sections below.

Table 2-1. Notes for All Replacement Part Cross-Reference Tables (1 of 2)

Note	Description
Part Quantity Per Instrument	Unless otherwise specified, only one (1) part is required per instrument.
Part Quantity Per Replacement Kit	Unless otherwise specified, each replacement part kit contains only one (1) part.
RPN	Replacement Part Number
ERN	Engineering “A” Reference Number
All Phase VNAs	Applicable to both Phase 1 and Phase 2 VNAs.
Phase 1 VNAs	Generally, VNAs with a S/N of 1132241 and lower.
Phase 2 VNAs	Generally, VNAs with a S/N of 1133242 and higher.
All Models	Applicable to all MS4640A Series VNAs.
Specific Models	Where only applicable to a single model VNA: • MS4642A, 10 MHz to 20 GHz, K Connectors • MS4644A, 10 MHz to 40 GHz, K Connectors • MS4645A, 10 MHz to 50 GHz, V Connectors • MS4647A, 10 MHz to 70 GHz, V Connectors Where applicable to pairs of VNA models: • MS4642A and MS4644A • MS4645A and MS4647A

Table 2-1. Notes for All Replacement Part Cross-Reference Tables (2 of 2)

Note	Description
Options	Except as noted, options are applicable to all VNA Phases and all VNA models: • Any – Applicable to Standard No Options or any combination of options. • Standard No Options – The VNA is not equipped with Option 051, 061, or 062. • 051 – Applicable to VNAs equipped with Option 051 Front Panel Loops. • 061 – Applicable to VNAs equipped with Option 061 Front Panel Loops and Two Attenuators • 062 – Applicable to VNAs equipped with Option 062 Front Panel Loops with Four Attenuators • 080 – Broadband/Millimeter Wave Option 080 for MS4647A with Standard No Options. • 081 – Broadband/Millimeter Wave Option 081 for MS4647A with Option 051, 061, or 062. • 080/081 – Broadband/Millimeter Wave Option for MS4647A with any option.
Replacement Procedures	Summarizes the requirements for accessing the to-be-replaced part, removing it, and installing a replacement part: • External Part: Part can be serviced with the instrument covers on. • Covers Off: The covers must be removed from the instrument to service the part. • Remove Front Panel: This part requires the Front Panel be removed. • RF Deck In: The part can be serviced with the covers off and the RF Deck in place. Usually the instrument is positioned upside down. • RF Deck Out: The RF Deck must be removed from the instrument to service this part, usually located on the RF Deck Top Side. A T3545 Fixture is recommended. • Internal Assembly: This is an internal assembly with additional disassembly requirements.

Replacement Parts by Location, ERN, and RPN

Table 2-2 below lists the VectorStar VNA replacement parts by replacement location, engineering reference number (ERN), and then by replacement part number. Where indicated, a cross-reference to an example figure is provided.

Table 2-2. Replacement Parts - Sorted by Location, RPN, and APN (1 of 15)

Procedure Location	RPN	APN	ERN	Name and Description Location Reference Figure Replacement Procedure	Phase Model Option
Covers On External Part	No ND	67357-6	—	Front Panel Loop Cable, K connector • Six (6) per instrument • Kit contains one (1) loop • Figure 2-1, “Model Identity Label – 3-60124-XX and Front Panel” on page 2-18	Any Phase MS4642A MS4644A 051, 061,or 062
Covers On External Part	No ND	62109-1	—	Front Panel Loop Cable, V (m-m) Connector • Six (6) per instrument • Kit contains one (1) loop • Figure 2-1, “Model Identity Label – 3-60124-XX and Front Panel” on page 2-18	Any Phase MS4645A MS4647A 051, 061, 062

Table 2-2. Replacement Parts - Sorted by Location, RPN, and APN (2 of 15)

Procedure Location	RPN	APN	ERN	Name and Description Location Reference Figure Replacement Procedure	Phase Model Option
Covers On External Part	No ND	3-60124-9	—	MS4642A Model Identity Label • Must be ordered separately from replacement Front Panel Assembly • Figure 2-1, “Model Identity Label – 3-60124-XX and Front Panel” on page 2-18	Any Phase MS4642A Any Option
Covers On External Part	No ND	3-60124-10	—	MS4644A Model Identity Label • Must be ordered separately from replacement Front Panel Assembly • Figure 2-1, “Model Identity Label – 3-60124-XX and Front Panel” on page 2-18	Any Phase MS4644A Any Option
Covers On External Part	No ND	3-60124-13	—	MS4645A Model Identity Label • Must be ordered separately from replacement Front Panel Assembly • Figure 2-1, “Model Identity Label – 3-60124-XX and Front Panel” on page 2-18	Any Phase MS4645A Any Option
Covers On External Part	No ND	3-60124-11	—	MS4647A Model Identity Label • Must be ordered separately from replacement Front Panel Assembly • Figure 2-1, “Model Identity Label – 3-60124-XX and Front Panel” on page 2-18	Any Phase MS4647A Any Option
Covers On External Part	No ND	62112-1	—	Rear Panel Loop Cable, SMA (m-m) Connector • Six (6) per instrument • Kit contains one (1) loop • Figure 2-33, “Rear Panel Assembly - In Chassis Covers Off” on page 2-70	Any Phase All Models 051, 061. 062
Covers On External Part	No ND	34YK50C	—	Test Port K Connector • Two (2) per instrument • Kit contains with one (1) connector • Figure 2-2, “VNA Major Internal Assemblies – Phase 1 VNA Shown” on page 2-19	Any Phase MS4642A MS4644A Any Option
Covers On External Part	No ND	34YV50C	—	Test Port V Connector • Two (2) per instrument • Kit contains one (1) connector • Figure 2-2, “VNA Major Internal Assemblies – Phase 1 VNA Shown” on page 2-19	Any Phase MS4645A MS4647A Any Option
Covers On External Part	ND70071	62091	HDD	Hard Disk Assembly • Plug and play with VectorStar Application Software installed. • For replacement purposes only. • For a spare drive, order Option 004. • Figure 2-33, “Rear Panel Assembly - In Chassis Covers Off” on page 2-70	Any Phase Any Model Any Option

Table 2-2. Replacement Parts - Sorted by Location, RPN, and APN (3 of 15)

Procedure Location	RPN	APN	ERN	Name and Description Location Reference Figure Replacement Procedure	Phase Model Option
Covers On External Part	ND73934	67861	SSD	Solid State Drive Assembly (SSD) • Plug and play with VectorStar Application Software installed. • For replacement purposes only. • For a spare drive, order Option 004. • Figure 2-33, “Rear Panel Assembly - In Chassis Covers Off” on page 2-70	Any Phase Any Model Any Option
Covers Off Digital PCBs	ND70061	3-2000-1525 and 3-59632	A3	A3 Single Board Computer (SBC) PCB Assembly • The A3 replacement PCB consists of APN 3-59632 (PCB) and the attached APN 3-2000-1525 (SODIMM). Both parts are included in the A3 ND70061 replacement kit. • A3, A4, A6, A7, and A8 PCBs must be used together. • Requires Phase 1 MB2 – ND70070 – 61923-3 • The A3 carries the A4 PCB. • Figure 2-5, “A3 Single Board Computer and A4 USB Controller PCB Assemblies” on page 2-26	Phase 1 VNAs Any Model Any Option
Covers Off Digital PCBs	ND70062	65412-4	A4	A4 USB Controller PCB Assembly • In Phase 1 VNAs, mounts on the A3 PCB. • In Phase 2 VNAs, mounts on the front side of the CD PCB. • Figure 2-5, “A3 Single Board Computer and A4 USB Controller PCB Assemblies” on page 2-26	Any Phase Any Model Any Option
Covers Off Digital PCBs	ND70063	3-2000-1485	A6	A6 cPCI-PMC Adapter Card PCB Assembly • A3, A4, A6, A7, and A8 PCBs must be used together. • Requires Phase 1 MB2 – ND70070 – 61923-3 • Carries A7 and A9 PCBs • Figure 2-6, “A6 cPCI-PMC Adapter, A7 Graphics Adapter, and A8 GPIB Module PCBs” on page 2-27	Phase 1 VNAs Any Model Any Option
Covers Off Digital PCBs	ND70064	3-2000-1517	A7	A7 Graphic Adapter PCB Assembly • A3, A4, A6, A7, and A8 PCBs must be used together. • Requires Phase 1 MB2 – ND70070 – 61923-3 • Mounted on A6 PCB • Figure 2-6, “A6 cPCI-PMC Adapter, A7 Graphics Adapter, and A8 GPIB Module PCBs” on page 2-27.	Phase 1 VNAs Any Model Any Option

Table 2-2. Replacement Parts - Sorted by Location, RPN, and APN (4 of 15)

Procedure Location	RPN	APN	ERN	Name and Description Location Reference Figure Replacement Procedure	Phase Model Option
Covers Off Digital PCBs	ND70065	65413-3	A8	A8 GPIB Module PCB Assembly • In Phase 1 VNAs, mounts on A6 PCB • In Phase 2 VNAs, mounts on CB PCB • Figure 2-6, “A6 cPCI-PMC Adapter, A7 Graphics Adapter, and A8 GPIB Module PCBs” on page 2-27. • Figure 2-8, “Carrier Board PCB Assembly – ND73874 – 3-72444-3 - PCB Front Side” on page 2-31.	Any Phase Any Model Any Option
Covers Off Digital PCBs	ND70066	61933-3	A10	A10 Digital Signal Processing (DSP) Module PCB Assembly • Figure 2-7, “A10 DSP Module PCB Assembly – ND70066 – 61933-3” on page 2-28	Any Phase Any Model Any Option
Covers Off Digital PCBs	ND73874	3-72444-3	CB	Carrier Board PCB (CB PCB) Assembly • The front-side daughter boards are: SBC, SO-DIMM (2 each), PMC-USB, and A8 GPIB PCBs. • The back-side daughter board is the GPU PCB. • Figure 2-8, “Carrier Board PCB Assembly – ND73874 – 3-72444-3 - PCB Front Side” on page 2-31. • Figure 2-9, “Carrier Board PCB Assembly – ND73874 – 3-72444-3 - PCB Back Side” on page 2-33.	Phase 2 VNAs Any Model Any Option
Covers Off Digital PCBs	ND73876	3-2000-1661	GPU	Graphics Processor Unit (GPU PCB) ATI PCB Assembly • With heatsink • Mounts on back side of the CB PCB. • Figure 2-9, “Carrier Board PCB Assembly – ND73874 – 3-72444-3 - PCB Back Side” on page 2-33.	Phase 2 VNAs Any Model Any Option
Covers Off Digital PCBs	ND73875	3-2000-1668	SBC	Single Board Computer (SBC PCB) • With heatsink • Mounts on front side of the CB PCB. • Figure 2-8, “Carrier Board PCB Assembly – ND73874 – 3-72444-3 - PCB Front Side” on page 2-31.	Phase 2 VNAs Any Model Any Option
Covers Off Digital PCBs	No ND	3-2000-1671	SO DIMM	Small Outline Dual In-line Memory (SODIMM) PCB Module • Mounts on the front side of the SBC PCB. • Two (2) per instrument • One (1) per replacement kit • Figure 2-8, “Carrier Board PCB Assembly – ND73874 – 3-72444-3 - PCB Front Side” on page 2-31.	Phase 2 VNAs Any Model Any Option

Table 2-2. Replacement Parts - Sorted by Location, RPN, and APN (5 of 15)

Procedure Location	RPN	APN	ERN	Name and Description Location Reference Figure Replacement Procedure	Phase Model Option
Covers Off Analog PCBs	ND70076	62080	A11	A11 IF Band Module PCB Assembly • Top analog module • Figure 2-10, “A11 IF Band, A13 Source, and A15 Low Band Receiver Module Assemblies” on page 2-34. • Figure 2-11, “A11 IF Band Module – ND70076 – 62080” on page 2-35.	Phase 1 VNAs Any Model Any Option
Covers Off Analog PCBs	ND70077	62082	A13	A13 Source Module PCB Assembly • Middle analog module • A13 Module PCB can be ND70077 – 62082 or ND73202 – 62082-1. Both parts are identical. • A13 Module PCB – ND70077 – 62082 is used on VNAs with S/N 1120219 and lower. • Figure 2-10, “A11 IF Band, A13 Source, and A15 Low Band Receiver Module Assemblies” on page 2-34. • Figure 2-12, “A13 Source Module – ND70077 – 62082 or ND73202 – 62082-1” on page 2-36.	Any Phase Any Model Any Option
Covers Off Analog PCBs	ND73202	62082-1	A013 A13	A13 Source Module PCB Assembly • Middle analog module • A13 Module PCB can be ND73202 – 62082-1 or ND70077 – 62082. Both parts are identical. • A13 Module PCB – ND73202 – 62082-1 is used on VNAs with S/N 1120220 and higher. • Figure 2-10, “A11 IF Band, A13 Source, and A15 Low Band Receiver Module Assemblies” on page 2-34. • Figure 2-12, “A13 Source Module – ND70077 – 62082 or ND73202 – 62082-1” on page 2-36.	Any Phase Any Model Any Option
Covers Off Analog PCBs	ND70075	62079	A15	A15 Low Band Receiver Module PCB Assembly • Bottom analog module • Figure 2-10, “A11 IF Band, A13 Source, and A15 Low Band Receiver Module Assemblies” on page 2-34. • Figure 2-12, “A13 Source Module – ND70077 – 62082 or ND73202 – 62082-1” on page 2-36.	Any Phase Any Model Any Option
Covers Off RF Deck In Front Panel Off	ND70060	62078	—	Front Panel Assembly • Two (2) cable connections to instrument chassis. • Includes two (2) ribbon cables permanently attached. • No user-serviceable parts inside the Front Panel. • Requires Phase 1 MB2 PCB • Cannot be retrofitted to Phase 2 VNAs. • Identity Label 3-60124-XX must be ordered separately • Figure 2-14, “Phase 1 Front Panel Assembly – Cable Connections to MB2 PCB” on page 2-39.	Phase 1 VNAs with S/N 1106189 and lower Any Model Any Option

Table 2-2. Replacement Parts - Sorted by Location, RPN, and APN (6 of 15)

Procedure Location	RPN	APN	ERN	Name and Description Location Reference Figure Replacement Procedure	Phase Model Option
Covers Off RF Deck In Front Panel Off	ND73194	73257	—	Front Panel Assembly • Two (2) cable connections to instrument chassis. • Includes two (2) ribbon cables permanently attached. • No user serviceable parts inside Front Panel. • Requires Phase 1 MB2 • Requires Phase 1 Power Supply and Harness • Cannot be retrofitted to Phase 1 VNAs. • Identity Label 3-60124-XX must be ordered separately • Figure 2-14, “Phase 1 Front Panel Assembly – Cable Connections to MB2 PCB” on page 2-39.	Phase 1 VNAs with S/N 1106190 and above Any Model Any Option
Covers Off RF Deck In Front Panel Off	ND73195	3-72015	—	Front Panel Assembly • Three (3) cable connections to instrument chassis. • Does not include cables USB, Signal/Power, and HDMI. • No user serviceable parts inside Front Panel. • Requires Phase 2 MB2 • Requires Phase 2 Power Supply and Harness • Cannot be retrofitted to Phase 1 VNAs. • Identity Label 3-60124-XX must be ordered separately • Figure 2-17, “Phase 2 Front Panel Assembly – Cable Connections to MB2 PCB” on page 2-42.	Phase 2 VNAs Any Model Any Option
Covers Off RF Deck In	No ND	K232B	—	RF Deck Front Panel RF, LO1, and LO2 Panel K Connector, F-F • Three (3) per VNA instrument • Three (3) per 3739A Broadband Test Set • One (1) per replacement kit	Any Phase MS4647A 080, 081
Covers Off RF Deck In	ND70068	61929-3	A18	RF Control PCB Assembly • Figure 2-19, “MS4642A 20 GHz VNA - RF Deck - A18 Module and PCB” on page 2-45.	Any Phase Any Model Any Option
Covers Off RF Deck In	No ND	66480	A104 A106	Test Coupler, 40 GHz • Two (2) per instrument • One (1) per replacement kit	Any Phase MS4642A MS4644A Any Option
Covers Off RF Deck In	No ND	66245	A104 A106	Test Coupler, 70 GHz • Two (2) per instrument • One (1) per replacement kit • Figure 2-23, “RF Deck Bottom Side Modules - MS4647A with Option 062 Shown” on page 2-49.	Any Phase MS4645A MS4647A Any Option
Covers Off RF Deck In	No ND	66487	A105 A107	Reference Coupler, 40 GHz • Two (2) per instrument • One (1) per replacement kit	Any Phase MS4642A MS4644A Any Option

Table 2-2. Replacement Parts - Sorted by Location, RPN, and APN (7 of 15)

Procedure Location	RPN	APN	ERN	Name and Description Location Reference Figure Replacement Procedure	Phase Model Option
Covers Off RF Deck In	No ND	65270	A105 A107	Reference Coupler, 70 GHz • Two (2) per instrument • Kit contains one (1) coupler • Figure 2-23, “RF Deck Bottom Side Modules - MS4647A with Option 062 Shown” on page 2-49.	Any Phase MS4645A MS4647A Any Option
Covers Off RF Deck In	ND70092	66221	A108	High Band Transfer Switch (HBTS), 40 GHz • Figure 2-20, “MS4644A 40 GHz VNA - RF Deck - A18 Modules and PCB” on page 2-46.	Any Phase MS4642A MS4644A Any Option
Covers Off RF Deck In	ND70093	66619	A108	V Integrated High Band Transfer Switch (VITS), 70 GHz • Figure 2-21, “MS4645A 50 GHz and MS4647A 70 GHz VNAs - RF Deck - A18 PCB Modules” on page 2-47.	MS4645A MS4647A Any Option

Table 2-2. Replacement Parts - Sorted by Location, RPN, and APN (8 of 15)

Procedure Location	RPN	APN	ERN	Name and Description Location Reference Figure Replacement Procedure	Phase Model Option
Covers Off RF Deck In	ND70095	67417-2	A109	Port 1 Level Detector, K Connector, 40 GHz • This part is only used on VNAs equipped with Standard No Options. • For VNAs with Option 051, 061, or 062, use A109 Port 1 Level Detector, K Connector, 40 GHz – ND72124 – 67147-1.	Any Phase MS4642A MS4644A Standard No Options
Covers Off RF Deck In	ND70097	67389-2	A109	Port 1 Level Detector, V Connector, 70 GHz • This part is only used on VNAs equipped with Standard No Options. • For VNAs equipped with Option 051, 061, or 062, use A109 Port 1 Level Detector, V Connector, 70 GHz – ND72126 - 67389-1.	Any Phase MS4645A MS4647A Standard No Options
Covers Off RF Deck In	ND72124	67417-1	A109	Port 1 Level Detector, K Connector, 40 GHz • This part is only used on VNAs equipped with Option 051, 061, or 062. • For VNAs equipped with Standard No Options, use A109 Port 1 Level Detector, 40 GHz, K Connector – ND70095 - 67417-2	Any Phase MS4642A MS4644A 051, 061, or 062
Covers Off RF Deck In	ND72126	67389-1	A109	Port 1 Level Detector, V Connector, 70 GHz • This part is only used on VNAs equipped with Option 051, 061, or 062. • For VNAs equipped with Standard No Options, use A109 Port 1 Level Detector, V Connector, 70 GHz – ND70095 - 67417-2. • Figure 2-23, “RF Deck Bottom Side Modules - MS4647A with Option 062 Shown” on page 2-49.	Any Phase MS4645A MS4647A 051, 061 or 062
Covers Off RF Deck In	ND70094	67417-1	A110	Port 2 Level Detector, K Connector, 40 GHz • This part is only used on VNAs with Standard No Options. • For VNAs with Option 051, 061, or 062, use A110 Port 2 Level Detector, K Connector, 40 GHz – ND72125 – 67417-2.	Any Phase MS4642A MS4644A Standard No Options
Covers Off RF Deck In	ND70096	67389-1	A110	A110 Port 2 Level Detector, V Connector, 70 GHz • This part is only used on VNAs with Standard No Options. • For VNAs with Option 051, 061, or 062, use A110 Port 2 Level Detector, V Connector, 70 GHz – ND72127 – 67389-2. • Figure 2-23, “RF Deck Bottom Side Modules - MS4647A with Option 062 Shown” on page 2-49.	Any Phase MS4645A MS4647A Standard No Options
Covers Off RF Deck In	ND72125	67417-2	A110	Port 2 Level Detector, 40 GHz, K Connector • This part is a only used on VNAs equipped with Option 051, 061, or 062. • For VNAs with Standard No Options, use A110 Port 2 Level Detector, K Connector, 40 GHz – ND90094 – 67417-1	Any Phase MS4642A MS4644A 051, 061, or 062

Table 2-2. Replacement Parts - Sorted by Location, RPN, and APN (9 of 15)

Procedure Location	RPN	APN	ERN	Name and Description Location Reference Figure Replacement Procedure	Phase Model Option
Covers Off RF Deck In	ND72127	67389-2	A110	Port 2 Level Detector, V Connector, 70 GHz • This part is only used on VNAs equipped with Option 051, 061, or 062. • For VNAs with Standard No Option, use A110 Port 2 Level Detector, V Connector, 70 GHz – ND70096 – 67389-1. • Figure 2-23, “RF Deck Bottom Side Modules - MS4647A with Option 062 Shown” on page 2-49.	Any Phase MS4645A MS4647A 051, 061, or 062
Covers Off RF Deck In	ND70098	59772	A112	Switched Doubler Module (SDM) • Figure 2-21, “MS4645A 50 GHz and MS4647A 70 GHz VNAs - RF Deck - A18 PCB Modules” on page 2-47.	Any Phase MS4644A MS4645A MS4647A Any Option
Covers Off RF Deck In	ND70099	60-327	A114	Switched Quadrupler Module (SQM) • Figure 2-21, “MS4645A 50 GHz and MS4647A 70 GHz VNAs - RF Deck - A18 PCB Modules” on page 2-47.	Any Phase MS4645A MS4647A Any Option
Covers Off RF Deck In	No ND	66050	A120 A121 A122 A123	High Band Step Attenuator, Test or Source, 70 GHz • Two (2) per instrument with 061 (A121, A123) • Four (4) per instrument with 062 • Kit contains one (1) attenuator. • Figure 2-23, “RF Deck Bottom Side Modules - MS4647A with Option 062 Shown” on page 2-49.	Any Phase MS4645A MS4647A 061, 062
Covers Off RF Deck In	No ND	68570	A120 A123	High Band Step Attenuator, Test, 40 GHz • One (1) per instrument with 061 (A123), two (2) per instrument with 062 • Kit contains one (1) attenuator. • See 66052 (High Band Test Step Attenuator, 40 GHz, A121, A122) above for other attenuator	Any Phase MS4642A MS4644A 061, 062
Covers Off RF Deck In	No ND	66052	A121 A122	High Band Step Attenuator, Source, 40 GHz • One (1) per instrument with 061 (A121) • Two (2) per instrument with 062 • Kit contains one (1) attenuator	Any Phase MS4642A MS4644A 061, 062
Covers Off RF Deck In	ND70088	66465	A128	Diplexer/Bias Tee Module, Port 1, 40 GHz • This part is obsolete and has been replaced by the A128 Diplexer/Bias Tee Module, Port 1, 40 GHz – ND73940 – 74277.	Any Phase MS4642A MS4644A Any Option
Covers Off RF Deck In	ND70090	64911	A128	Diplexer/Bias Tee Module, Port 1, 70 GHz • This part is obsolete and has been replaced by the A128 Diplexer/Bias Tee Module, Port 1, 70 GHz – ND73942 – 74278	Any Phase MS4645A MS4647A Any Option

Table 2-2. Replacement Parts - Sorted by Location, RPN, and APN (10 of 15)

Procedure Location	RPN	APN	ERN	Name and Description Location Reference Figure Replacement Procedure	Phase Model Option
Covers Off RF Deck In	ND73940	74277	A128	Diplexer/Bias Tee Module, Port 1, 40 GHz • This part is a replacement for the obsolete A128 Diplexer/Bias Tee Module, Port 1, 40 GHz – ND70088 – 66465.	Any Phase MS4642A MS4644A Any Option
Covers Off RF Deck In	ND73942	74278	A128	Diplexer/Bias Tee Module, Port 1, 70 GHz • This part is a replacement for the obsolete A128 Diplexer/Bias Tee Module, Port 1, 70 GHz – ND70090 – 64911. • Figure 2-23, “RF Deck Bottom Side Modules - MS4647A with Option 062 Shown” on page 2-49.	Any Phase MS4645A MS4647A Any Option
Covers Off RF Deck In	ND70089	66465	A129	Diplexer/Bias Tee Module, Port 2, 40 GHz • This part is obsolete and has been replaced by the A129 Diplexer/Bias Tee Module, Port 2, 40 GHz – ND73941 – 74277.	Any Phase MS4642A MS4644A Any Option
Covers Off RF Deck In	ND70091	64911	A129	Diplexer/Bias Tee Module, Port 2, 70 GHz • This part is obsolete and has been replaced by the A129 Diplexer/Bias Tee Module, Port 2, 70 GHz – ND73943 – 74278. • Figure 2-23, “RF Deck Bottom Side Modules - MS4647A with Option 062 Shown” on page 2-49.	Any Phase MS4645A MS4647A Any Option
Covers Off RF Deck In	ND73941	74277	A129	Diplexer/Bias Tee Module, Port 2, 40 GHz • This part is a replacement for the obsolete A129 Diplexer/Bias Tee, Port 2, 40 GHz – ND70089 – 66465.	Any Phase MS4642A MS4644A Any Option
Covers Off RF Deck In	ND73943	74278	A129	Diplexer/Bias Tee Module, Port 2, 70 GHz • This part is a replacement for the obsolete A129 Diplexer/Bias Tee Module – ND70091 – 64911. • Figure 2-23, “RF Deck Bottom Side Modules - MS4647A with Option 062 Shown” on page 2-49.	Any Phase MS4645A MS4647A Any Option
Covers Off RF Deck In	No ND	72237	A133	20-40 GHz RF Coupler Module • Mounts on the A18 PCB in the RF Deck	Any Phase MS4647A 080, 081
Covers Off RF Deck Out	ND70080	64920	A113	5-20 GHz Doubler Module • Figure 2-24, “RF Deck Top Right Side Modules – A113, A115, A116, and A117” on page 2-52.	Any Phase Any Model Any Option
Covers Off RF Deck Out	ND70079	64690	A115	Low Band Transfer Switch • Figure 2-24, “RF Deck Top Right Side Modules – A113, A115, A116, and A117” on page 2-52.	Any Phase Any Model Any Option

Table 2-2. Replacement Parts - Sorted by Location, RPN, and APN (11 of 15)

Procedure Location	RPN	APN	ERN	Name and Description Location Reference Figure Replacement Procedure	Phase Model Option
Covers Off RF Deck Out	ND70085	3-2000-1502	A124	Low Band Test Attenuator, Port 1 • Harness attached • Figure 2-26, “RF Deck Top Side Modules – Option 062 – Loops and Four Attenuators” on page 2-56.	Any Phase Any Model Option 062
Covers Off RF Deck Out	ND70084	3-2000-1502	A125	Low Band Source Attenuator, Port 1 • Harness attached • Figure 2-26, “RF Deck Top Side Modules – Option 062 – Loops and Four Attenuators” on page 2-56.	Any Phase Any Model Option 061 or 062
Covers Off RF Deck Out	ND70086	3-2000-1502	A126	Low Band Source Attenuator, Port 2 • Harness attached • Figure 2-26, “RF Deck Top Side Modules – Option 062 – Loops and Four Attenuators” on page 2-56.	Any Phase Any Model Option 062
Covers Off RF Deck Out	ND70087	3-2000-1502	A127	Low Band Test Attenuator, Port 2 • Harness attached • Figure 2-26, “RF Deck Top Side Modules – Option 062 – Loops and Four Attenuators” on page 2-56.	Any Phase Any Model 061, 062
Covers Off RF Deck Out or RF Deck In	ND70078	64016	A116 A117 A118 A119	Low Band Bridge • Four (4) per instrument • Replacement kit contains one (1) bridge • A116 and A117 located on RF Deck Top Side, accessible with RF Deck Out • A118 and A119 located on RF Deck Bottom Side, accessible with RF Deck In; A118 in Port 1 Module Group; A119 in Port 2 Module Group • Figure 2-24, “RF Deck Top Right Side Modules – A113, A115, A116, and A117” on page 2-52. • Figure 2-23, “RF Deck Bottom Side Modules - MS4647A with Option 062 Shown” on page 2-49.	Any Phase Any Model Any Option

Table 2-2. Replacement Parts - Sorted by Location, RPN, and APN (12 of 15)

Procedure Location	RPN	APN	ERN	Name and Description Location Reference Figure Replacement Procedure	Phase Model Option

Covers Off
RF Deck Out
SLODM Assembly
	ND73203	67355-12	—	Cable required when replacing the obsolete ND70081 A111 LO Module with the new ND73193 A111 Module.
				• Connects the A111 J6 connector to the A13 Source Module J17 connector.
				• This cable is not included in the A111 ND73193 – 72440 replacement kit and must be ordered separately.
				• One of the two cable below is also required depending on the location of the A130 Module:
				  • If the A130 LO Coupler Module is mounted on top of the A100 Sampler Module, the 62111-1 Cable below is also required and must be ordered separately.
				  • If the A130 is mounted on top of A101 Sampler Module, the 62111-8 Cable below is also required and must be ordered separately.
				• See A111 LO Distribution Module – ND73193 - 72440 for other requirements.
					Phase 1 VNAs
					Any Model
					Any Options

Covers Off RF Deck Out SLODM Assembly	No ND	62111-1	—	Cable required when replacing the obsolete ND70081 A111 LO Module with the new ND73193 A111 LO Module AND the A130 LO Coupler Module is present on top of the A100 Sampler Module. • Connects the A100 J2 connector to the A111 J2 connector. • This cable is not included in the A111 ND73193 – 72440 replacement kit and must be ordered separately. • The ND73203 – 67355-12 Cable above is also required and must be ordered separately.	Phase 1 VNAs with A111 ND70081 and A130 mounted on A100 Any Model Any Option
Covers Off RF Deck Out SLODM Assembly	No ND	62111-8	—	Cable required when replacing the obsolete ND70081 A111 LO Module with the new ND73193 A111 LO Module AND the A130 LO Coupler Module is present on top of the A101 Sampler Module. • Connects the A101 J2 connector to the A111 J3 connector. • This cable is not included in the A111 ND73193 – 72440 replacement kit and must be ordered separately. • The ND73203 – 67355-12 Cable above is also required and must be ordered separately.	Phase 1 VNAs with A111 ND70081 and A130 mounted on A101 Any Model Any Option

Table 2-2. Replacement Parts - Sorted by Location, RPN, and APN (13 of 15)

Procedure Location	RPN	APN	ERN	Name and Description Location Reference Figure Replacement Procedure	Phase Model Option
Covers Off RF Deck Out SLODM Assembly	ND70082	64180	A100 A101 A102 A103	Sampler Module • Four (4) per instrument. • Replacement kit provides one (1) module. • The A100, A101, A102, and A103 mount on the A111 LO Coupler/Level Detector Module – ND70081 – 66270 or ND73193 – 72440. • The A100-A103 modules are components of the Sampler/LO Distribution Module Assembly. • Figure 2-27, “SLODM Assembly – 62084 B – Components” on page 2-57.	Any Phase Any Model Any Option
Covers Off RF Deck Out SLODM Assembly	ND70081	66270	A111	LO Distribution Module • A111 – ND70081 - 66270 is no longer available. Use A111 – ND73193 as a replacement. • Requires the 62111-8 and ND73203 cables. • Early Phase 1 VNAs • The A111 provides mounting for four (4) A100-A103 Sampler Modules – ND70082 – 64180. • The A130 LO Coupler Module – ND70083 – 68848 is mounted on top of the A100 Sampler. • The A111 is a component of the Sampler/LO Distribution Module Assembly. • Figure 2-27, “SLODM Assembly – 62084 B – Components” on page 2-57.	Phase 1 VNAs Any Model Any Option
Covers Off RF Deck Out SLODM Assembly	ND73193	72440	A111	LO Distribution Module • The A111 is a component of the Sampler/LO Distribution Module Assembly. • The A111 provides mounting for four (4) A100-A104 Sampler Modules – ND70082 – 64180. • This A111 – ND73193 – 72440 is also a substitute for the obsolete A111 – ND70081 - 62270. If replacing the A111 – ND70081 - 62270, also required are the ND73203 cable and either the 62111-1 or 62111-8 cable. • Figure 2-31, “SLODM Assembly – 62084 D – Components” on page 2-65.	New equipment on VNAs with S/N 1120220 and above. Substitute part on Phase 1 VNAs Any Model Any Option

Table 2-2. Replacement Parts - Sorted by Location, RPN, and APN (14 of 15)

Procedure Location	RPN	APN	ERN	Name and Description Location Reference Figure Replacement Procedure	Phase Model Option
Covers Off RF Deck Out SLODM Assembly	ND70083	68848	A130	LO Coupler Module • Depending in the instrument serial number and equipped options, the A130 LO Coupler Module mounts on top of the A100 or A101 Sampler Module. • Not equipped in VNAs with S/N 1101180 and higher. • The A100 mounts on the A111 LO Distribution Module – ND70081. • The A130 is a component of the Phase 1 Sampler/LO Distribution Module Assembly. • Figure 2-27, “SLODM Assembly – 62084 B – Components” on page 2-57.	Phase 1 VNAs Any Model Any Option
Covers Off RF Deck Out SLODM Assembly	No ND	70685	A131 A132	LO Coupler Module • Two (2) per instrument • One (1) per replacement kit • A131 LO Coupler mounts on top of A101Sampler Module • A132 LO Coupler mounts on top of A103Sampler Module • The A131-A132 modules and the A100-A103 modules are components of the Sampler/LO Distribution Module Assembly when the VNA is equipped with Option 080/081. • Figure 2-30, “SLODM Assembly – 73231 A – Components – MS4647A with Option 080/081” on page 2-63.	Any Phase MS4647A 080, 081
Covers Off Rear Panel	ND70074	62095-2	—	Rear Panel Fan Assembly • 330 mm Cable Attached • Figure 2-35, “Rear Panel – Inside Connections and Assemblies” on page 2-74	Any Phase Any Model Any Option
Covers Off Rear Panel	ND70067	61924-3	A17	Rear Panel PCB Assembly • Figure 2-34, “Rear Panel - A17 Rear Panel PCB Assembly – ND70067 – 62086” on page 2-72	Any Phase Any Model Any Option
Covers Off Internal Part Power Supply	ND70072	62088	—	Phase 1 Power Supply Module and Cable Harness • Includes Power Cable Assembly 3-72058 • Requires Phase 1 Digital PCBs of A3, A4, A6, A7, and A8. • Requires Phase 1 Front Panel Assembly • Requires Phase 1 Motherboard 2 PCB Assembly • Cannot be used with Phase 2 MB2 or Phase 2 PCBs. • Figure 2-36, “Phase 1 Power Supply Assembly – ND70072 – 62088” on page 2-76.	Phase 1 VNAs Any Model Any Option

Table 2-2. Replacement Parts - Sorted by Location, RPN, and APN (15 of 15)

Procedure Location	RPN	APN	ERN	Name and Description Location Reference Figure Replacement Procedure	Phase Model Option
Covers Off Internal Part Power Supply	ND73933	71995	—	Phase 2 Power Supply Module and Harness • Includes Power Supply Cable Assembly – 3-71996 and 3.3 Volt Sense Cable – 3-67873 • Requires Phase 2 Digital PCB Assemblies • Requires Phase 2 Front Panel Assembly • Requires Phase 2 Motherboard 2 PCB Assembly • Cannot be used with Phase 1 MB2, A3, A4, A6, A7, or A8 PCBs. • Figure 2-37, “Phase 2 – Power Supply Module and Harnesses – ND73933 – 71955” on page 2-78.	Phase 2 VNAs Any Model Any Option
Covers Off Internal Part Motherboard	ND70070	61923-3	MB2	Phase 1 Motherboard 2 (MB2) PCB Assembly • Requires Phase 1 A3, A4, A6, A7, and A8 Digital PCBs. • Requires Phase 1 Front Panel Assembly • Requires Phase 1 Power Supply Module and Cable Harness • Figure 2-39, “Phase 1 Motherboard 2 PCB Assembly – ND70070 – 61923-3 – Connectors” on page 2-83.	Phase 1 VNAs Any Model Any Option
Covers Off Internal Part Motherboard	ND73878	3-72813-3	MB2	Phase 2 Motherboard 2 (MB2) PCB Assembly • Requires Phase 2 Digital PCBs: Carrier Board, PMC-GPIB, PMC-USB, SODIMM, and GPU PCBs. • Requires Phase 2 Front Panel Assembly • Requires Phase 2 Power Supply Module and Harness • Figure 2-41, “Phase 2 Motherboard 2 PCB Assembly – ND73878 – 3-72813-3 – Connectors” on page 2-87.	Phase 2 VNAs Any Model Any Option
Covers Off Internal Part Motherboard	ND70069	61920-3	MB1	Motherboard 1 (MB1) PCB Assembly • Vertically mounted in the digital PCB bay and connectors project into the Analog Module PCB bay. • Figure 2-43, “Motherboard 1 PCB Assembly – ND70069 – 61920-3” on page 2-90	Any Phase Any Model Any Option
Covers Off Internal Part Power Supply Digital Fan	ND70073	62095-1	—	Digital PCB Fan Assembly • 165 mm Cable Attached • Figure 2-35, “Rear Panel – Inside Connections and Assemblies” on page 2-74.	Any Phase Any Model Any Option

The sections below provide location and identification drawings of many of the replacement components and assemblies.

2-6 External Parts

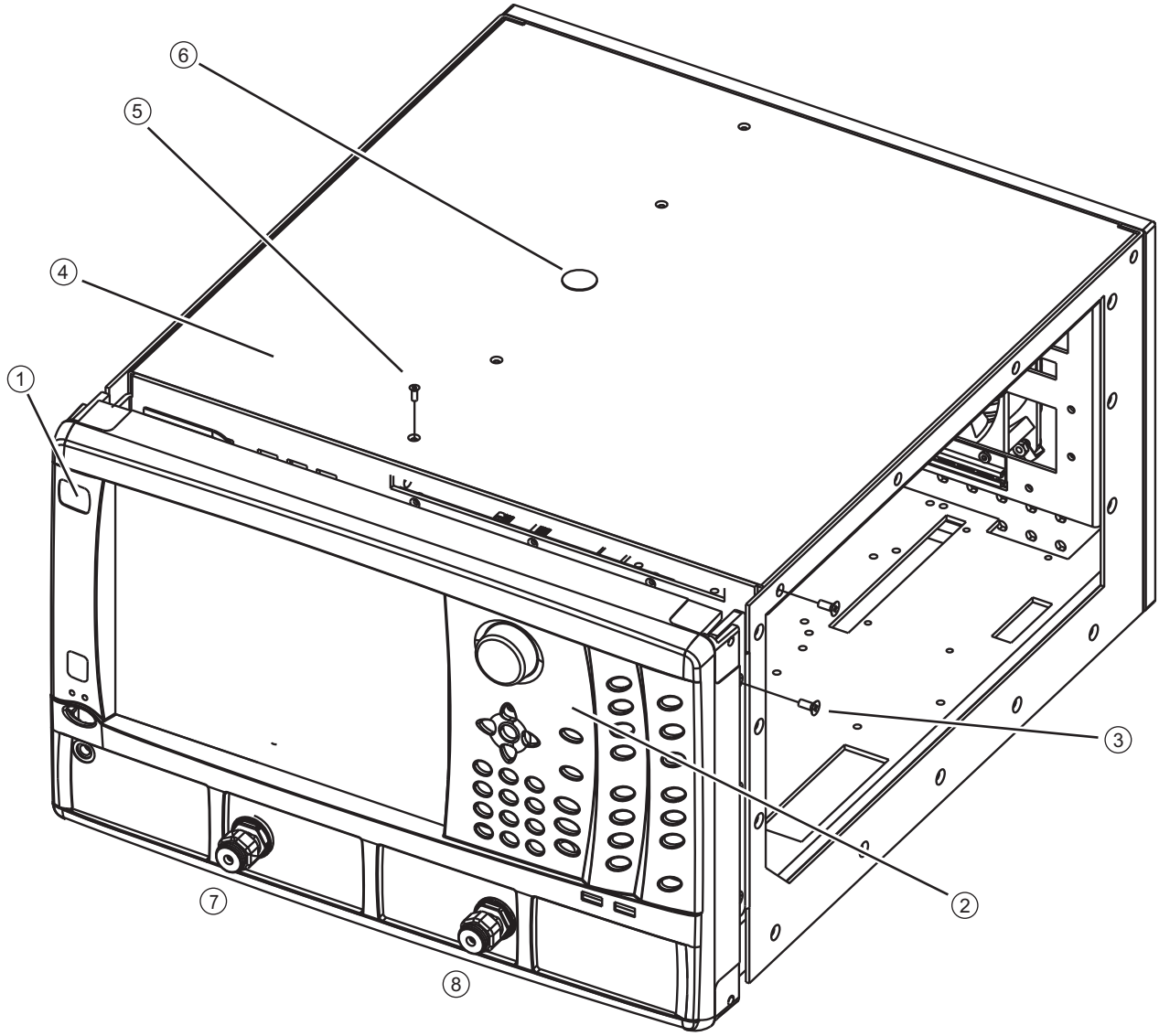

1. Model Identity Label – 3-60124-XX	5. Inner cover Mounting Screws, five (5) each.
2. Front Panel	6. Calibration Sticker – 3-48371 – Not provided as a replacement part.
3. Front Panel Mounting Screws, three (3) each side, six (6) total	7. Test Port 1 on RF Deck
4. Inner Cover – Notch and cutout is oriented toward rear panel.	8. Test Port 2 on RF Deck

Figure 2-1. Model Identity Label – 3-60124-XX and Front Panel

2-7 Major Internal Assemblies

The drawing in Figure 2-2 below shows the location of major components after the covers have been removed and the Front Panel partially detached. A Phase 1 VNA is shown with Phase 2 VNAs having components in similar locations as noted in the figure caption.

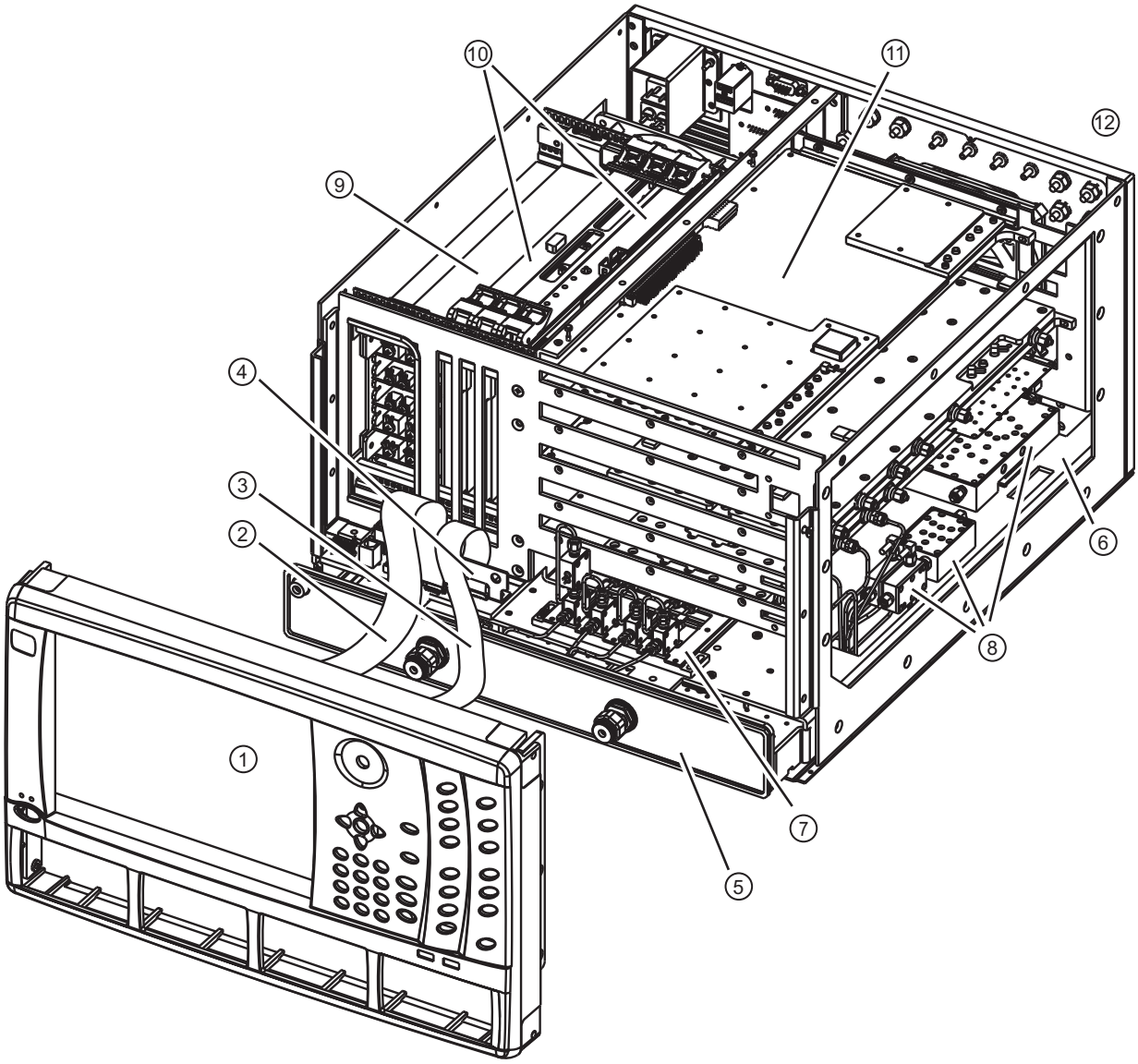

Figure 2-2. VNA Major Internal Assemblies – Phase 1 VNA Shown (1 of 2)

Orientation	Top Side Assemblies
1. Phase 1 Front Panel with two (2) attached cables • Phase 2 Front Panels have three (3) removable cables	9. Power Supply Module
Front Panel Cables	10. Digital PCB Assemblies
2. Phase 1 Front Panel Ribbon Cable • Phase 2 Front Panel has a similar Ribbon Cable	11. Analog Module PCB Assemblies
3. Phase 1 Front Panel Flex PCB Cable • Phase 2 Front Panels have a HDMI cable and a USB cable.	**Rear Panel**
4. Phase 1 Front Panel Flex PCB Cable ZIF Connector • Phase 2 Front Panels have a different ribbon cable connector.	12. Rear Panel
RF Deck	
5. RF Deck Front Panel – No options installed	
6. RF Deck inside chassis.	
7. Sampler/LO Distribution Module Assembly	
8. RF Deck Top Side Modules	

Figure 2-2. VNA Major Internal Assemblies – Phase 1 VNA Shown (2 of 2)

2-8 Top Side PCB Locations – Phase 1 VNAs

The figure below shows the instrument chassis with the covers off and the locations of the Phase 1 Digital PCB Assemblies.

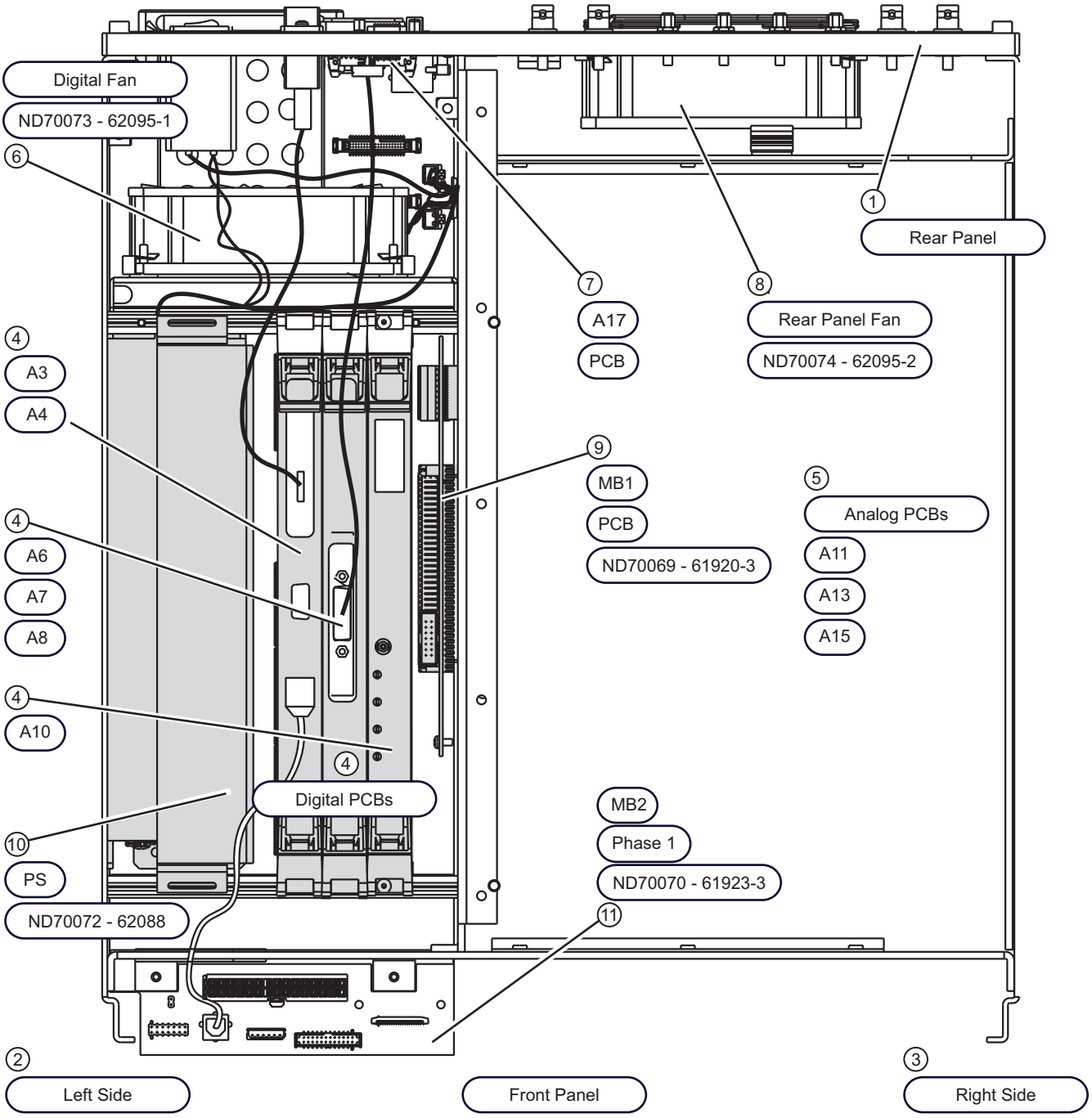

Figure 2-3. Digital PCB Locations – Phase 1 VNAs (1 of 2)

Phase 1 Digital PCB Orientation

1. Rear Panel
2. Left Side – Left side of instrument when viewed from the Front Panel.
3. Right Side – Right side of instrument when viewed from the Front Panel.

Digital Section

4. Digital PCBs – PCBs mounted vertically in the left side digital PCB bay. They seat into the backplane connectors on the horizontally mounted Motherboard 2 PCB Assembly – ND70070 – 61923-3.
   - A3 Single Board Computer (SBC) PCB Assembly – ND70061
   - A4 USB Controller PCB Assembly – ND70063. Mounted on A3.
   - A6 cPCI-PMC Adapter Card PCB Assembly – ND70063.
   - A7 Graphics Adapter Card PCB Assembly – ND70064. Mounted on A6.
   - A8 GPIB Module PCB Assembly – ND70065. Mounted on A6.
   - A10 Digital Signal Processing (DSP) Module PCB Assembly – ND70066.

Analog Section

5. Analog Modules – The PCB-like modules are mounted horizontally in the right side analog PCB bay. They seat into the backplane connectors on the vertically mounted Motherboard 1 PCB Assembly – ND70069 – 61920-3.
   - A11 IF Band Module – ND70076 – 62080 – Upper
   - A13 Source Module – ND70077 – 62082 or ND73202 – 62082-1 – Middle
   - A15 Low Band Receiver Module – ND70075 – 62079 – Lower
6. Digital PCB Fan Assembly – ND70073 – 62095-1 – With 165 mm cable harness and plug.
7. A17 Rear Panel PCB Assembly – ND70067 – 61924-3
   - Located inside the Rear Panel Chassis Assembly.
   - Provides connectors for the Serial, External I/O,IEEE 488.2 GPIB, and Dedicated GPIB Ports.
8. Rear Panel Fan Assembly – ND70074 – 62095-2 – With 330 mm cable harness and plug.
9. Motherboard 1 (MB1) PCB Assembly – ND70069 – 61920-3. This PCB seats into a backplane connector on the Motherboard 2 PCB Assembly – ND70070 – 61923-3.
10. Phase 1 Power Supply Module Assembly and Cable Harness – ND70072 – 62088 – With 3-72058 Cable Harness
11. Phase 1 Motherboard 2 (MB2) PCB Assembly – ND70070 – 61923-3

Figure 2-3. Digital PCB Locations – Phase 1 VNAs (2 of 2)

2-9 Top Side PCB Locations – Phase 2 VNAs

The figure below shows the instrument chassis with the covers off and the locations of the Phase 2 Digital PCB Assemblies.

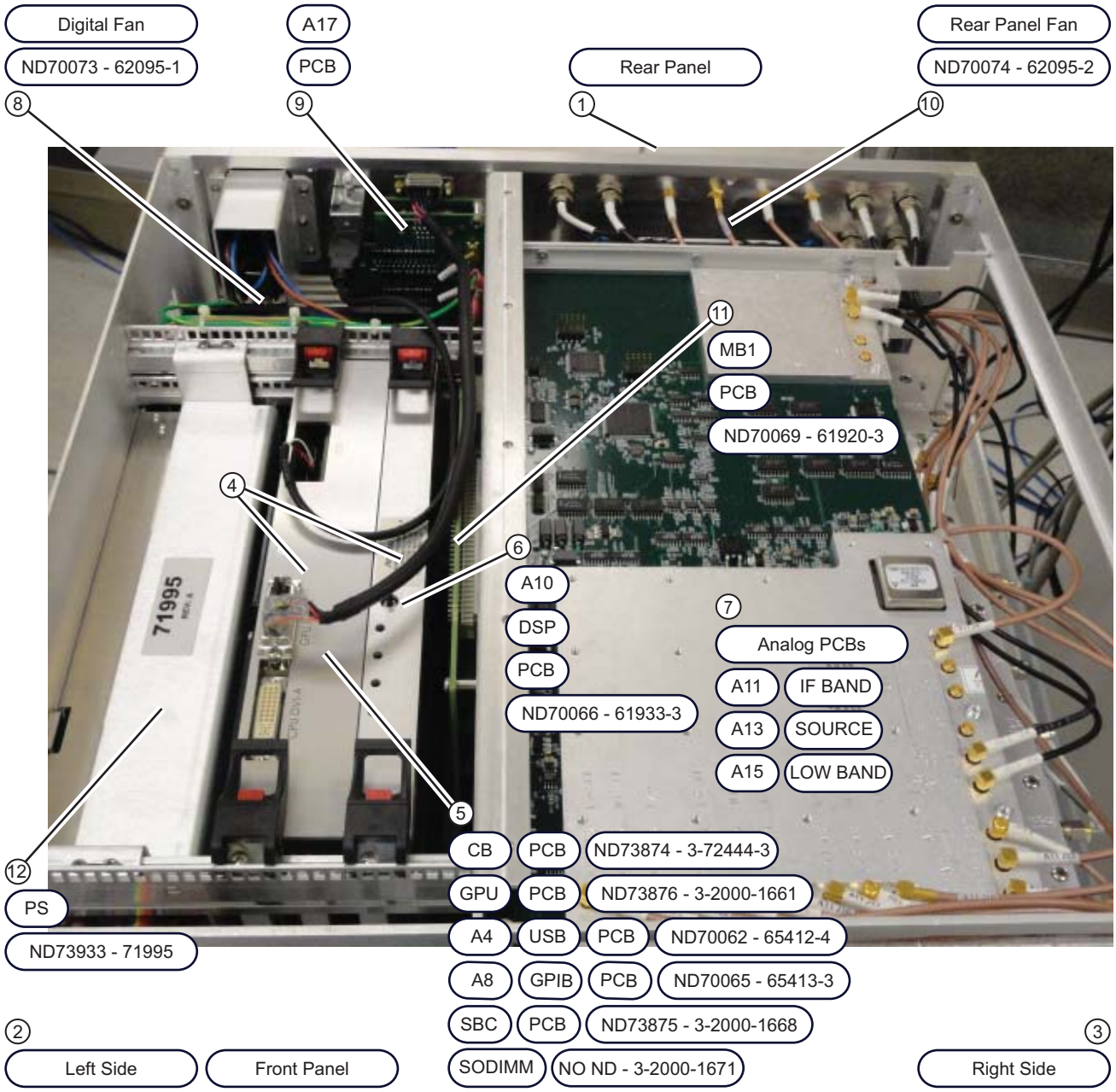

Figure 2-4. Digital PCB Locations – Phase 2 VNAs (1 of 2)

Phase 2 Digital PCB Orientation

1. Rear Panel
2. Left Side – Left side of instrument when viewed from the Front Panel.
3. Right Side – Right side of instrument when viewed from the Front Panel.

Digital PCB Section

4. Digital PCBs – PCBs mounted vertically in the left side digital PCB bay to the left of the Power Supply. They seat into the backplane connectors on the horizontally mounted Phase 2 Motherboard 2 PCB Assembly – ND3878 – 3-72813-3 (not shown)
5. Carrier Board PCB (CB PCB) Assembly – ND73874 – 3-72444-3 – Mounted on the CB PCB are:
   - Graphics Processor Unit (GPU PCB) PCB Assembly – ND73876 – 3-2000-1661 – Mounts on back of CB PCB.
   - A4 USB Controller PCB Assembly – ND70062 – 65412-4 – Mounts on front of CB PCB.
   - A8 GPIB Module PCB Assembly – ND70065 – 65413-3 – Mounts on front of CB PCB.
   - Single Board Computer (SBC PCB) – ND73875 – 3-2000-1668 – Mounts on front of CB PCB.
   - Small Outline Dual In-line Memory Module (SODIMM) – No ND – 3-2000-1671 – Mounts on the front side of the SBC PCB. Two (2) per instrument. One (1) per replacement kit.
6. A10 Digital Signal Processor PCB Assembly – ND70066 – 61933-3

Analog PCB Section

7. Analog PCB Modules – The PCB-like modules are mounted horizontally in the right side analog PCB bay. They seat into the backplane connectors on the vertically mounted Motherboard 1 PCB Assembly – ND70069 – 61920-3.
   - A11 IF Band Module – ND70076 – 62080 – Upper
   - A13 Source Module – ND70077 – 62082 or ND73202 – 62082-1 – Middle
   - A15 Low Band Receiver Module – ND70075 – 62079 – Lower

Rear Panel

8. Digital PCB Fan Assembly – ND70073 – 62095-1 – With 165 mm cable harness and plug.
9. A17 Rear Panel PCB Assembly – ND70067 – 61924-3 – Located inside the Rear Panel Chassis Assembly. Provides connectors for the Serial, External I/O,IEEE 488.2 GPIB, and Dedicated GPIB Ports.
10. Rear Panel Fan Assembly – ND70074 – 62095-2 – With 330 mm cable harness and plug.
11. Motherboard 1 (MB1) PCB Assembly – ND70069 – 61920-3
12. Phase 2 Power Supply Module and Cable Harnesses – ND73933 – 71995 – With Power Supply Cable – 3-71996 and 3.3 Volt Sense Cable – 3-67873

Figure 2-4. Digital PCB Locations – Phase 2 VNAs (2 of 2)

2-10 Digital PCBs – Phase 1 VNAs

On the left side of the instrument in the digital PCB bay are the PCB assemblies that can be removed from the top of the unit. The installed PCBs vary depending on the instrument serial number. The following six (6) PCB assemblies comprise the Phase 1 Digital PCB set.

	The Phase 1 A3 SBC, A6 Adapter Card, and A7 Graphics Adapter PCBs cannot be used Phase 2 VNAs and must be used with the Phase 1 MB2 PCB – ND70070 – 61923-3.
Note	The Phase 2 Carrier Board, Single Board Computer, and Graphics Processor Unit PCBs cannot be used in Phase 1 VNAs and must be used with the Phase 2 MB2 PCB – ND73878 – 3-72813-3.
	The A4 USB, A8 GPIB, and A10 DSP PCBs can be used in Phase 1 or Phase 2 VNAs.

- A3 Single Board Computer PCB Assembly – ND70061 – 3-2000-1525 or 3-59632
- A4 USB Controller PCB Assembly – ND70062 – 65412-4
  - The A4 USB PCB is mounted on the A3 SBC PCB.
  - The A4 USB PCB is used in both Phase 1 and Phase 2 VNAs.
- A6 cPCI to PMC Adapter Card PCB Assembly – ND70063 – 3-2000-1485
- A7 Graphic Adapter Card PCB Assembly – ND70065 – 3-2000-1517
  - The A7 Graphic PCB is mounted on the A6 PCI/PMC PCB.
- A8 GPIB Module PCB Assembly – ND70065 – 65413-3
  - The A8 GPIB PCB is mounted on the A6 PCI/PMC PCB.
  - The A8 GPIB PCB is used in both Phase 1 and Phase 2 VNAs.
- A10 Digital Signal Processor (DSP) Module PCB Assembly – ND70066 – 61933-3
  - The A10 DSP PCB is used in both Phase 1 and Phase 2 VNAs.

The basic removal and replacement procedures are the same for each PCB.

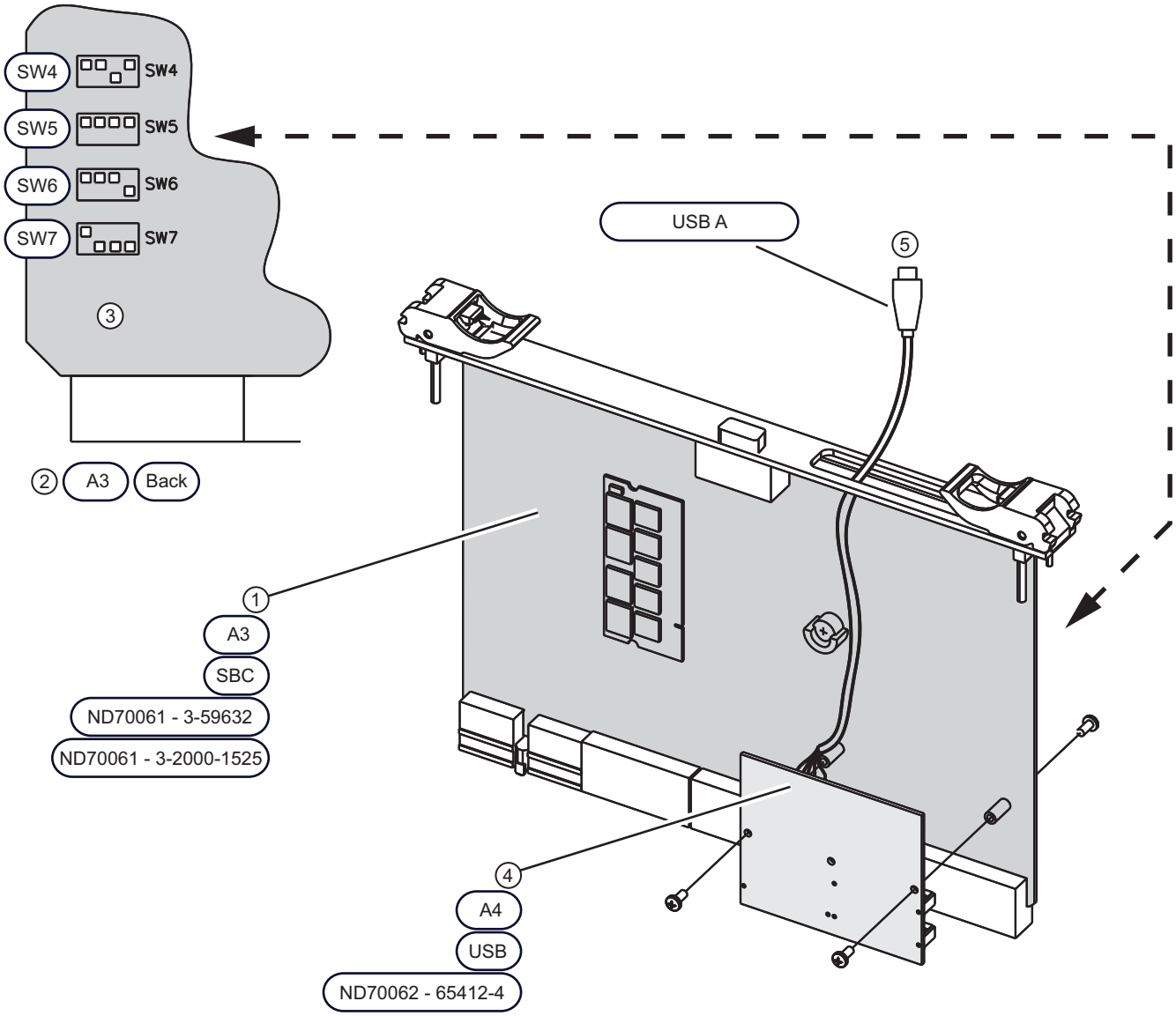

A3 SBC PCB	A4 USB PCB
1. A3 Single Board Computer PCB Assembly – ND70061 – 3-59632 and 3-2000-1525. 2. A3 Back – There are four (4) configuration DIP switches on the back of A3 labeled SW4, SW5, SW6, and SW7. Leave them in the factory as-shipped configuration. The correct settings are defined in “Procedure and A3 DIP Switch Settings” on page 9-10 below.	3. A4 USB Controller PCB Assembly – ND70062 – 65412-4 – Mounted on A3 with two (2) pan head Phillips M2.5 × 6 mm screws. 4. USB A – Cable permanently attached to A4 and routes to Rear Panel and USB Type B Port for VNA control by an external USB Controller.

Figure 2-5. A3 Single Board Computer and A4 USB Controller PCB Assemblies

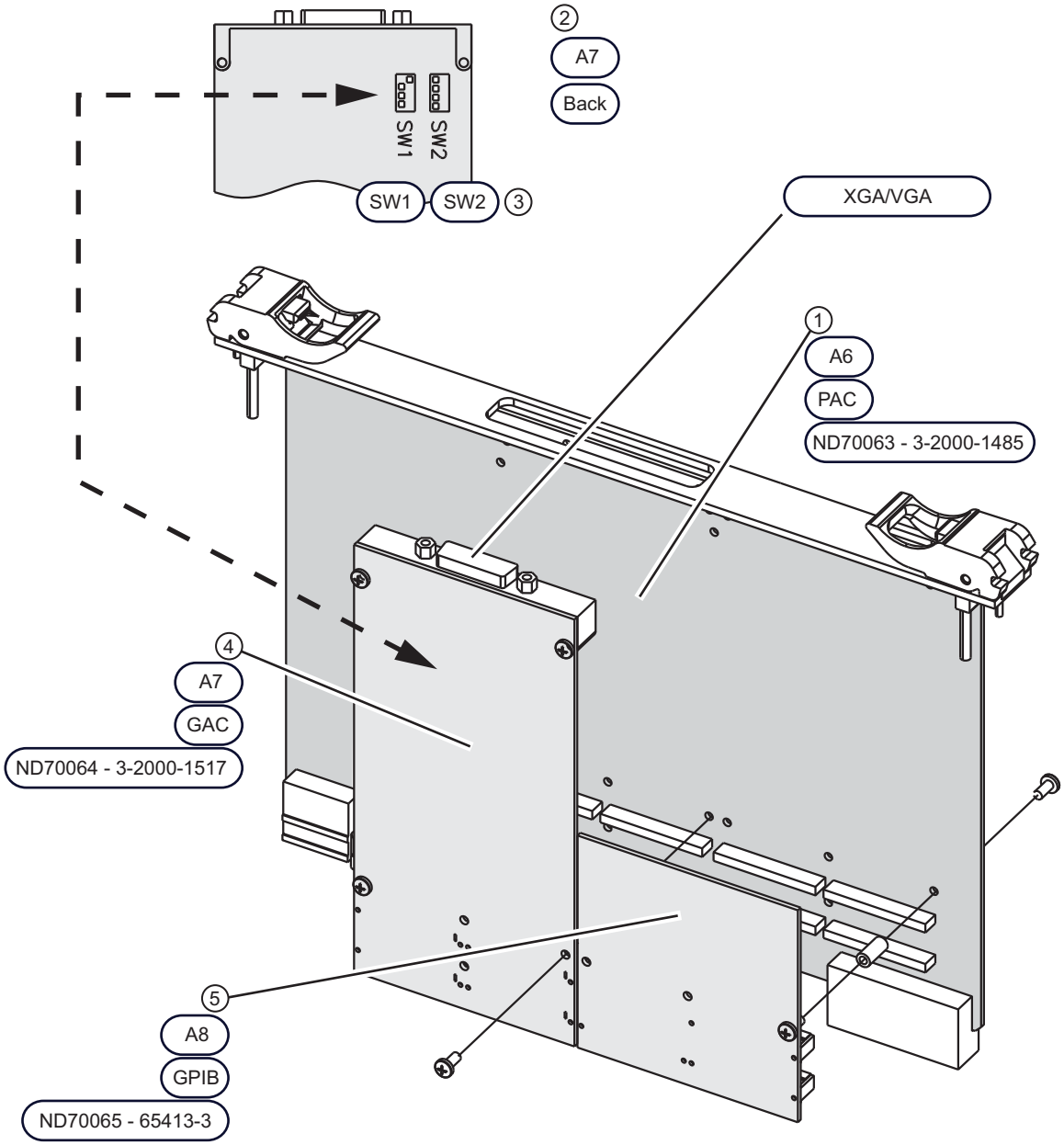

PCBs

1. A6 cPCI-PMC Adapter Card PCB Assembly (PAC) – ND70063 – 3-2000-1548
2. A7 Graphics Adapter PCB Assembly (GAC) – ND70064 – 3-2000-1517 – Mounted on the A6 PCB with two (2) pan head Phillips M2.5 x 6 mm screws.
3. A8 – GPIB Module PCB Assembly – ND70065 – 65413-3 – Mounted on A6 with two (2) pan head Phillips M2.5 x 6 mm screws.

DIP Switches and Cables

4. A7 Back – There are two (2) configuration DIP switches on the back of A7 PCB labeled SW1 and SW2. Leave them in the factory as-shipped configuration. The correct settings are defined in "A6, A7, and A8 PCB Procedure and A7 DIP Switch Settings" on page 9-14 below.
5. XGA/VGA – XGA/VGA DB-25 Connector on upper end of A7. The mating cable is permanently attached to the Rear Panel XGA/VGA DB-15 Port.

Figure 2-6. A6 cPCI-PMC Adapter, A7 Graphics Adapter, and A8 GPIB Module PCBs

2-11 Digital PCB – A10 DSP Module PCB Assembly

The A10 DSP PCB Assembly mounts in the right-side digital bay slot closest to the Motherboard 1 PCB Assembly. The A10 PCB is used in both Phase 1 and Phase 2 VNAs for all models with any options.

Caution	The A10 PCB contains model configuration data which is unique to each instrument. The replacement board is pre-configured at the Factory for the targeted instrument. DO NOT install the A10 PCB on a different instrument. If a VectorStar A10 DSP Module is removed and installed in any other VectorStar VNA, the data in the module's non-volatile memory will be corrupted.

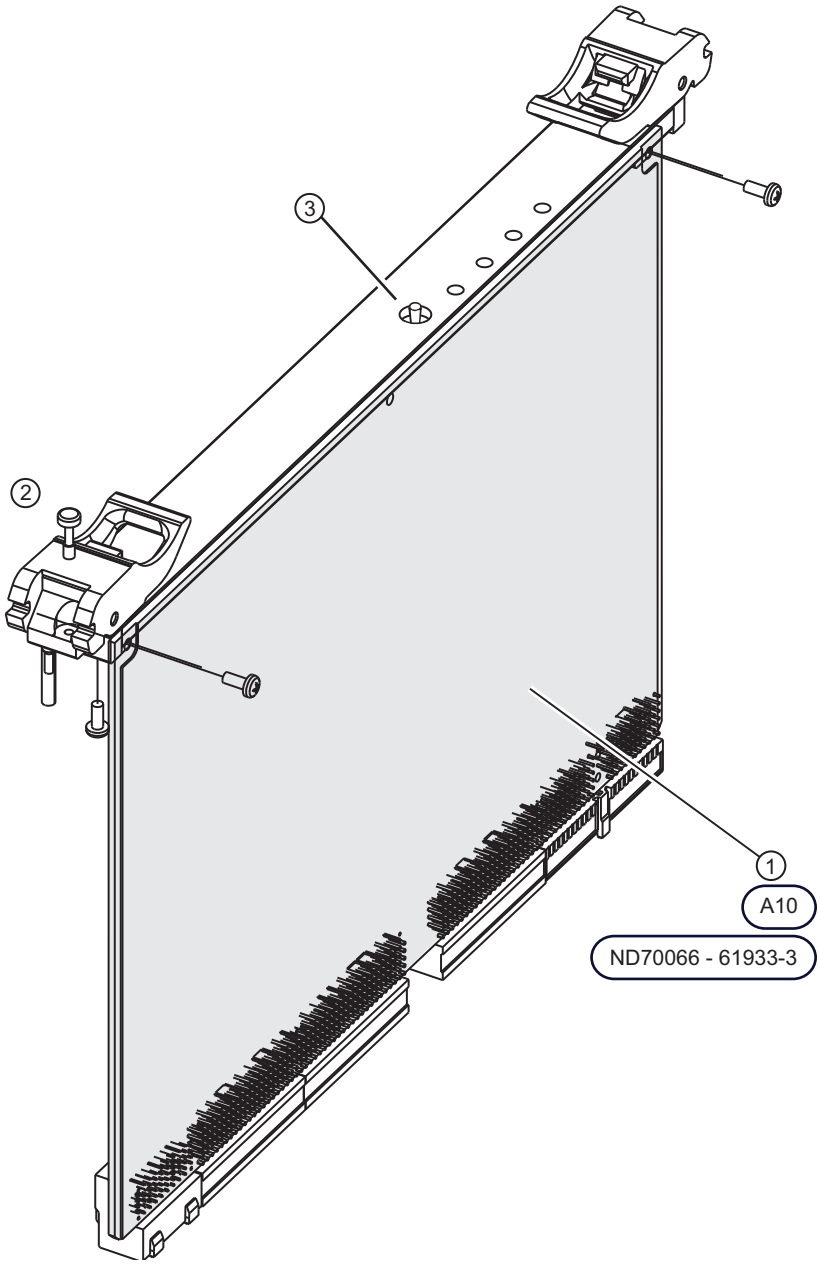

1. A10 Digital Signal Processor (DSP) Module PCB Assembly – ND70066 – 61933-3	2. PCB Ejector Handles and mounting hardware. 3. SW1 Reset Switch

Figure 2-7. A10 DSP Module PCB Assembly – ND70066 – 61933-3

2-12 Digital PCBs – Phase 2 VNAs

On the left side of the instrument in the digital PCB bay are the eight (8) PCB assemblies that can be removed from the top of the unit and comprise the Phase 2 Digital PCB set.

The Phase 2 Digital PCB assemblies are:

	The Phase 1 A3 SBC, A6 Adapter Card, and A7 Graphics Adapter PCBs cannot be used Phase 2 VNAs and must be used with the Phase 1 MB2 PCB – ND70070 – 61923-3.
Note	The Phase 2 Carrier Board, Single Board Computer, and Graphics Processor Unit PCBs cannot be used in Phase 1 VNAs and must be used with the Phase 2 MB2 PCB – ND73878 – 3-72813-3.
	The A4 USB, A8 GPIB, and A10 DSP PCBs can be used in Phase 1 or Phase 2 VNAs.

- Carrier Board (CB) PCB Assembly – ND73874 – 3-72444-3
  - Provides front side mounting side for the SBC, A4 USB, A8 GPIB PCBs.
  - Provides back side mounting for the GPU PCB.
- Single Board Computer (SBC) PCB Assembly – ND73875 – 3-2000-1668
  - Mounted on the front side of the CB PCB.
- A4 USB Controller PCB Assembly – ND70062 – 65412-4
  - Mounted on the front side of the CB PCB.
  - The A4 USB PCB is used in Phase 1 and Phase 2 VNAs.
- A8 GPIB Module (A8) PCB Assembly – ND70065 – 65413-3
  - Mounted on the front side of the CB PCB.
  - The A4 USB PCB is used in Phase 1 and Phase 2 VNAs.
- Small Outline Dual Inline Memory Module (SODIMM) PCB – No ND – 3-2000-1671 – 2 each
  - The two SODIMMs are mounted on the SBC PCB.
- Graphics Processor Unit PCB Assembly – ND73876 – 3-2000-1661
  - Mounted on the back side of the CB PCB.
- A10 Digital Signal Processor (DSP) Module PCB Assembly – ND70066 – 61933-3
  - Described in Section 2-11 “Digital PCB – A10 DSP Module PCB Assembly” on page 2-28 above.
  - The A10 DSP PCB is used in Phase 1 and Phase 2 VNAs.

The basic removal and replacement procedures are the same for each PCB.

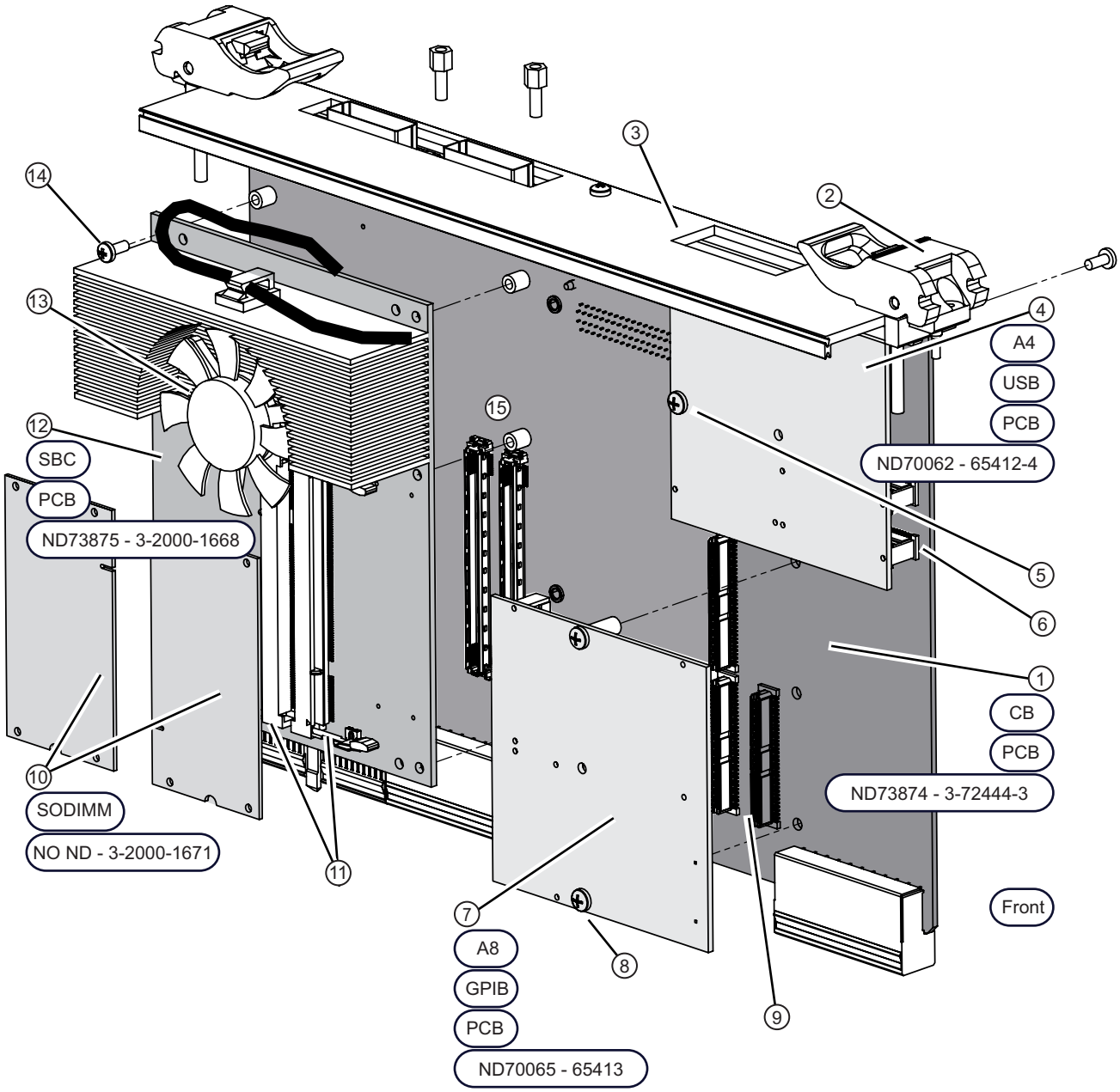

Figure 2-8. Carrier Board PCB Assembly – ND73874 – 3-72444-3 - PCB Front Side (1 of 2)

1. Carrier Board PCB (CB PCB) Assembly – ND73874 – 3-72444-3
2. CB PCB Ejector Handles
3. CB PCB Front Panel Connectors and LEDs
4. A4 USB Controller PCB Assembly – ND70062 – 65412-4
   - The A4 USB PCB is used in both Phase 1 and Phase 2 VNAs.
5. USB PCB mounting screws, 2 each
6. Connectors for USB PCB on CB PCB, 2 each
7. A8 GPIB PCB Assembly – ND70065 – 65413-3 – Mounts on the Carrier Board.
   - The A8 GPIB PCB is used in both Phase 1 and Phase 2 VNAs.
8. GPIB PCB mounting screws, 2 each
9. Connectors for PMC-USB PCB on CB-PCB, 3 each
10. Small Outline Dual In-line Memory Module (SODIMM) – No ND – 3-2000-1671
    - Two (2) SODIMMs per instrument
11. Connectors for SODIMMs on SBC PCB, one (1) per SODIMM, two (2) per SBC PCB
12. Single Board Computer (SBC) PCB Assembly – ND73875 – 3-2000-1668
13. SBC PCB heatsink, fan, and fan cable
14. SBC PCB mounting screws, 5 each
15. Connectors for SBC PCB on CB PCB, 2 each

Figure 2-8. Carrier Board PCB Assembly – ND73874 – 3-72444-3 - PCB Front Side (2 of 2)

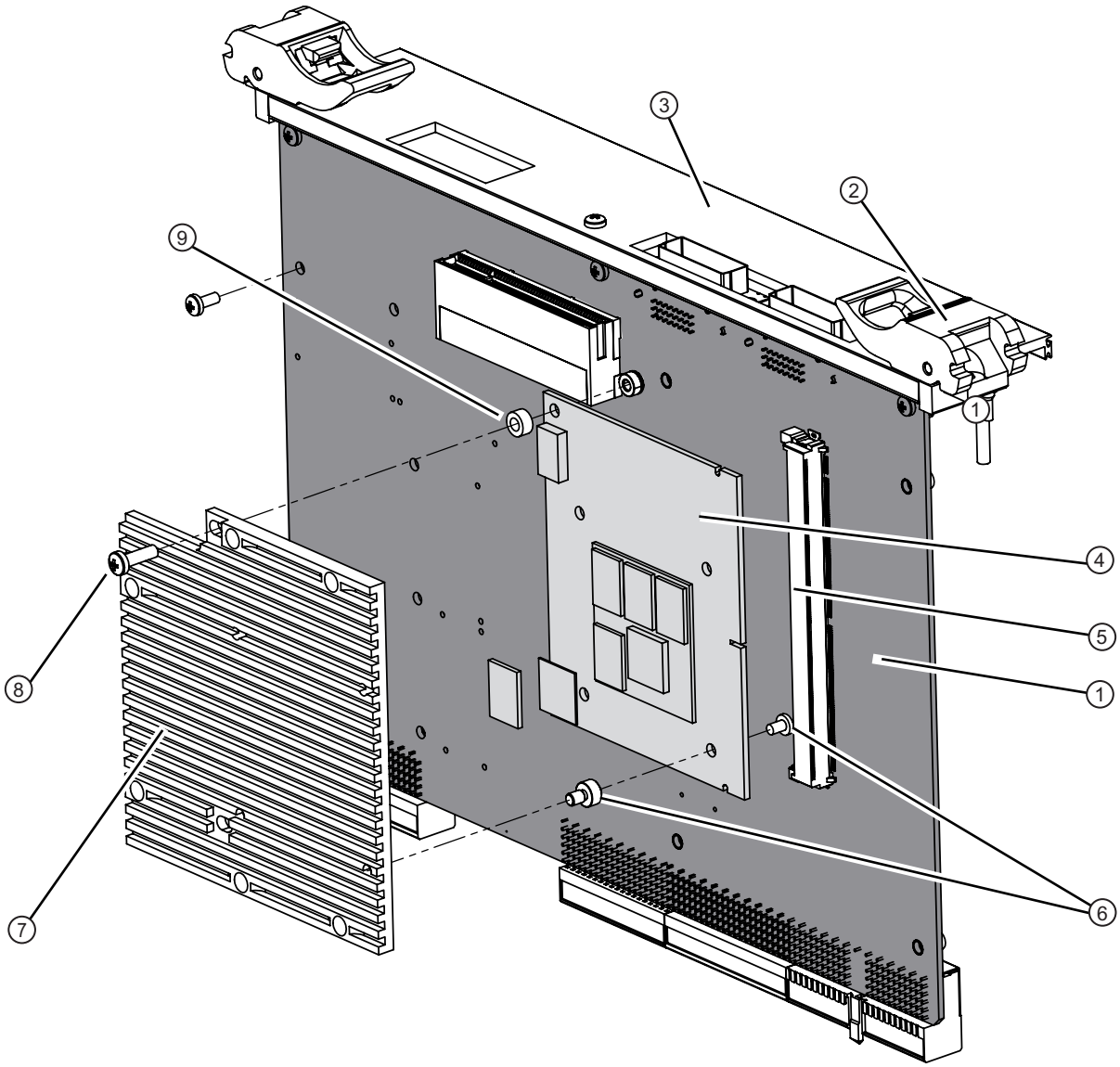

1. Carrier Board PCB (CB-PCB) Assembly – ND73874 – 3-72444-3	6. Heatsink mounting screws and standoffs, from back of GPU to threaded holes in heatsink, 4 each
2. CB-PCB Ejector Handles	7. GPU PCB Heatsink – 3-71973 • An included component of the GPU PCB replacement kit.
3. CB-PCB Front Panel Connectors and LEDs	8. Mounting screws holding Heatsink/GPU PCB assembly to CB-PCB, 2 each
4. Graphics Processor Unit (GPU) PCB – ND73876 – 3-2000-1661	9. Standoff washers between GPU PCB and Heatsink, 2 each
5. Connector for GPU PCB	

Figure 2-9. Carrier Board PCB Assembly – ND73874 – 3-72444-3 - PCB Back Side

2-13 Analog Module PCBs

This section describes the following analog module assemblies:

- A11 IF Band Module – ND70076 – 62080
- A13 Source Module – ND70077 – 62082 or ND73202 – 62082-1
    - Both parts are identical.
- A15 Low Band Receiver Module – ND70075 – 62079

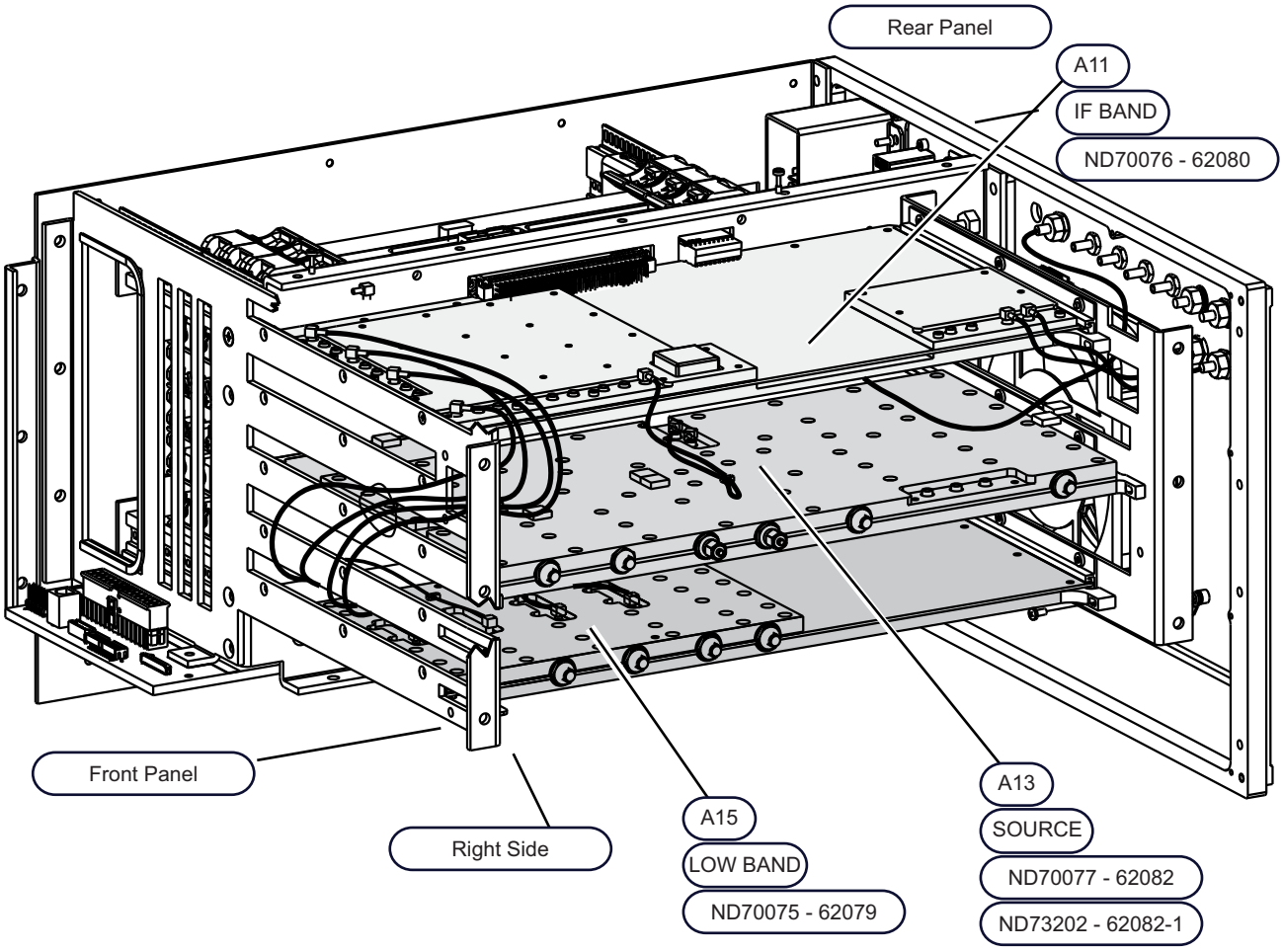

Orientation	Analog Modules
1. Right Side – Side panel and some cables removed for clarity.	4. A11 IF Band Module – ND70076 – 62080
2. Rear Panel – Rear Panel towards right.	5. A13 Source Module – ND70077 – 62082 or ND73202 – 62082-1
3. Front Panel – Towards left, removed for clarity.	6. A15 Low Band Receiver Module – ND70075 – 62079

Figure 2-10. A11 IF Band, A13 Source, and A15 Low Band Receiver Module Assemblies

A11 IF Band Module – ND70076 – 62080

The figure below shows the port and connector locations for the A11 module.

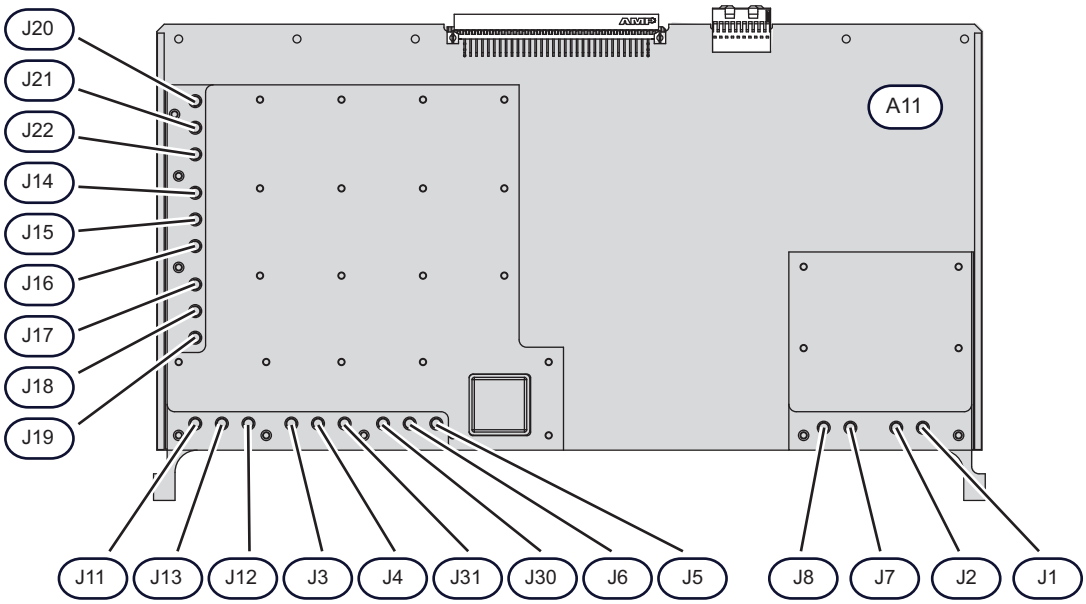

A11 IF Band Module Connectors	
J1 – External Analog In 1, from Rear Panel Analog In 1 Connector	J13 – a1 IF In/Out, from Rear Panel a1 IF Connector
J2 – External Analog In 2, from Rear Panel Analog In 2 Connector	J14 – Low Band b1 IF In, from A15 Low Band Receiver Module
J3 – External 10 MHz Reference In, from Rear Panel 10 MHz In Connector	J15 – High Band b1 IF In, from A100 b1 Sampler Module
J4 – 10 MHz Reference Out, to Rear Panel 10 MHz Out Connector	J16 – b1 IF In/Out, from Rear Panel b1 IF Connector
J5 – 10 MHz Reference Out, to A13 RF Source Module	J17 – Band a2 IF In, from A15 Low Band Receiver Module
J6 – 10 MHz Reference Out (Unused)	J18 – High Band a2 IF In, from A103 a2 Sampler Module
J7 – External A/D Clock In (Unused)	J19 – a2 IF In/Out, from Rear Panel a2 IF connector
J8 – External A/D Clock Out (Unused)	J20 – Low Band b2 IF In, from A15 Low Band Receiver Module
J11 – Low Band a1 IF In, from A15 Low Band Receiver Module	J21 – High Band b2 IF In, from A102 b2 Sampler Module
J12 – High Band a1 IF In, from A101 a1 Sampler Module	J22 – b2 IF In/Out, from Rear Panel b2 IF Connector
	J30 – 10 MHz Reference Out (Unused)
	J31 – 10 MHz Reference Out (Unused)

Figure 2-11. A11 IF Band Module – ND70076 – 62080

A13 Source Module – ND70077 – 62082 or ND73202 – 62082-1

The figure below shows the port and connector locations for the A13 module.

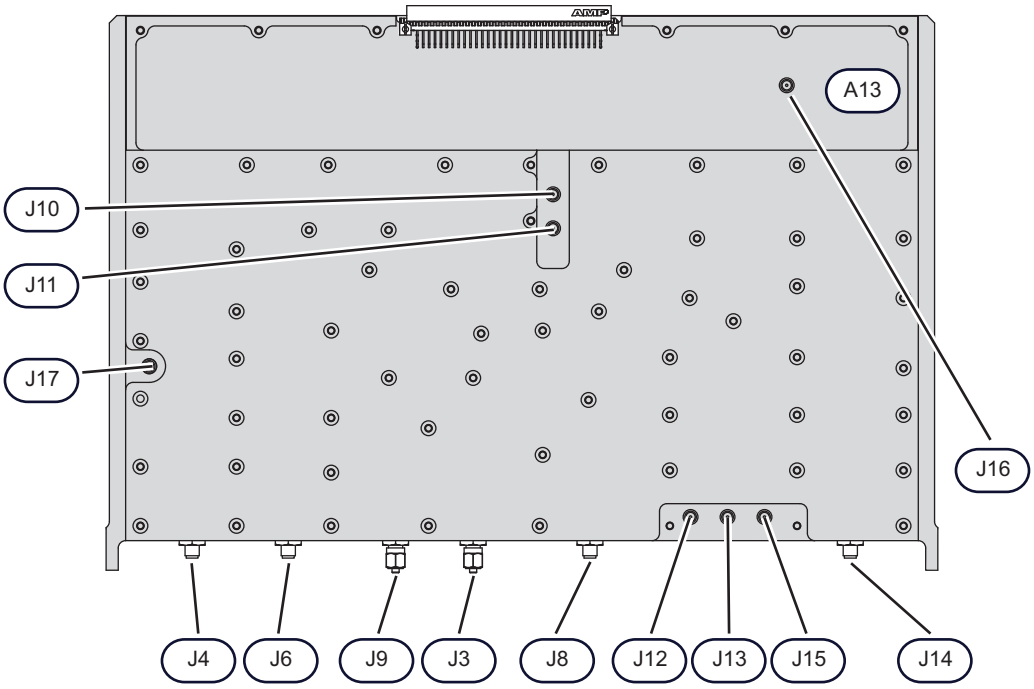

A13 Source Module Connectors	J11 – DDS Clock Out (Unused)
J3 – Common Offset Out (Terminated, unused)	J12 – High Band ALC Detector In, from A18 RF Component Control PCB
J4 – High Band LO Out, to A111 LO Distribution Module	J13 – External ALC Detector – Only used with Option 080/081
J6 – Low Band LO Out, to A11 IF Band Module	J14 – High Band Source Out, to A113 5-20 GHz Doubler Module
J8 – Low Band Source Out, to A115 Low Band Transfer Switch	J15 – SQM Modulator Drive Out, to A114 SQM
J9 – HET Out (Terminated, unused)	J17 – High Band LO ALC Detector In, from A130 LO Coupler Module
J10 – 10 MHz Reference In, from A11 IF Band Module	

Figure 2-12. A13 Source Module – ND70077 – 62082 or ND73202 – 62082-1

A15 Low Band Receiver Module – ND70075 – 62079

The figure below shows the port and connector locations for the A15 PCB.

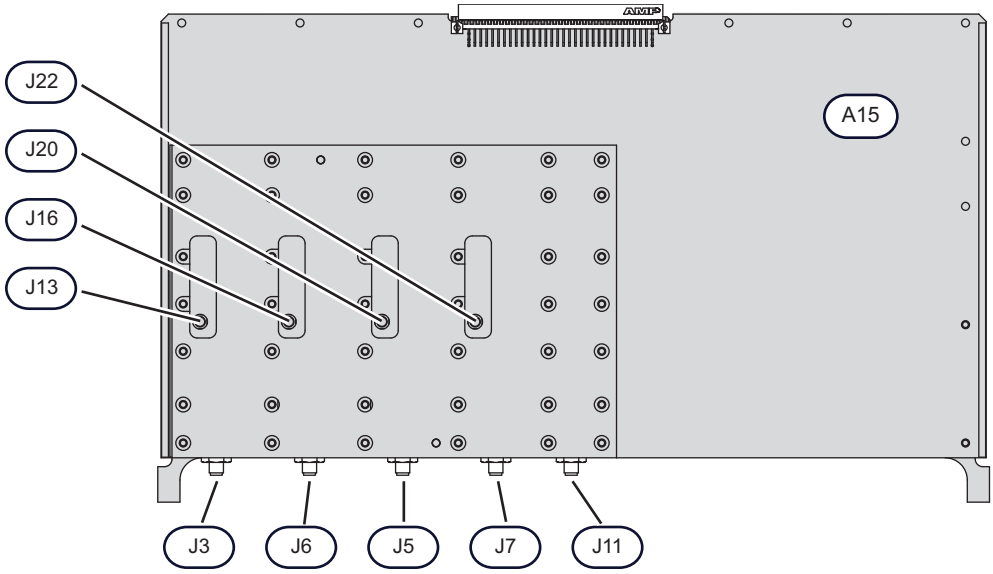

A15 Low Band Receiver Module Connectors	
J3 – Low Band a1 In, from Port 1 Low Band Reference Bridge	J7 – Low Band b2 In, from Port 2 Low Band Test Bridge
J5 – Low Band a2 In, from Port 2 Low Band Reference Bridge	J11 – Low Band LO In, from A13 RF Source Module
J6 – Low Band b1 In, from Port 1 Low Band Test Bridge	J13 – Low Band a1 IF Out, to A11 IF Band Module
For instruments with Options 051, 061 or 062, the J3, J5, and J6 signals are routed first through the rear panel connectors prior to arriving the A15 Low Band Receiver Module.	J16 – Low Band a2 IF Out, to A11 IF Band Module
	J20 – Low Band b1 IF Out, to A11 IF Band Module
	J22 – Low Band b2 IF Out, to A11 IF Band Module

Figure 2-13. A15 Low Band Receiver Module PCB Assembly – ND70075 – 62079

2-14 Front Panel Assembly and Connections – Phase 1 VNAs

Front Panel Removal

For servicing some RF Deck components, it is recommended or required to remove the Front Panel assembly.

The Front Panel is a single assembly with no user-serviceable parts inside, connected to the main chassis by a ribbon cable and a PCB Flex Cable. Disassembly first requires removing the outer and inner covers and then requires attention to and care of the PCB Flex Cable and its related connectors and strain reliefs.

Phase 1 – Front Panel Assembly – ND70060 – 62078

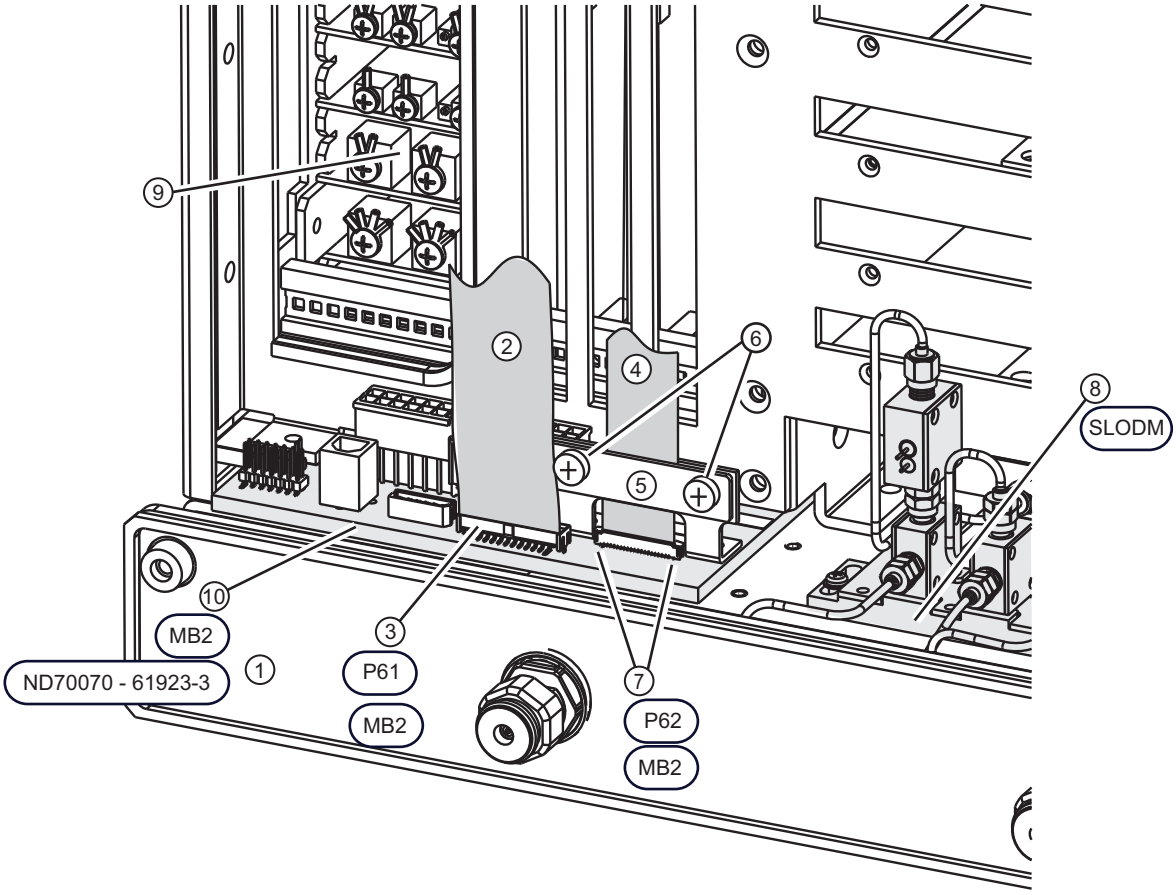

Front Panel Assembly – ND70060 – 62078 – Not shown for clarity.

1. RF Deck Front Panel
2. Gray ribbon cable from Front Panel.
   • Cable is permanently attached to Front Panel.
3. Gray ribbon cable plugged into **P61 Connector** on Motherboard 2 PCB Assembly. Pull out to remove.
4. Gold Flex PCB Cable from Front Panel.
   • Cable is permanently attached to Front Panel.
5. Gold Flex PCB cable connector stress relief/retainer bar.
6. Phillips-head captive screws on cable connector retainer bar.
7. White locking tabs on **P62 Connector** on Motherboard 2 PCB. LIft up 1 mm to release
8. SLODM – Sampler/LO Distribution Module PCB and Chassis Assembly
9. Power Supply Module distribution connectors. Harness connecting to **P94 Connector** on Motherboard 2 PCB Assembly not shown.

Figure 2-14. Phase 1 Front Panel Assembly – Cable Connections to MB2 PCB

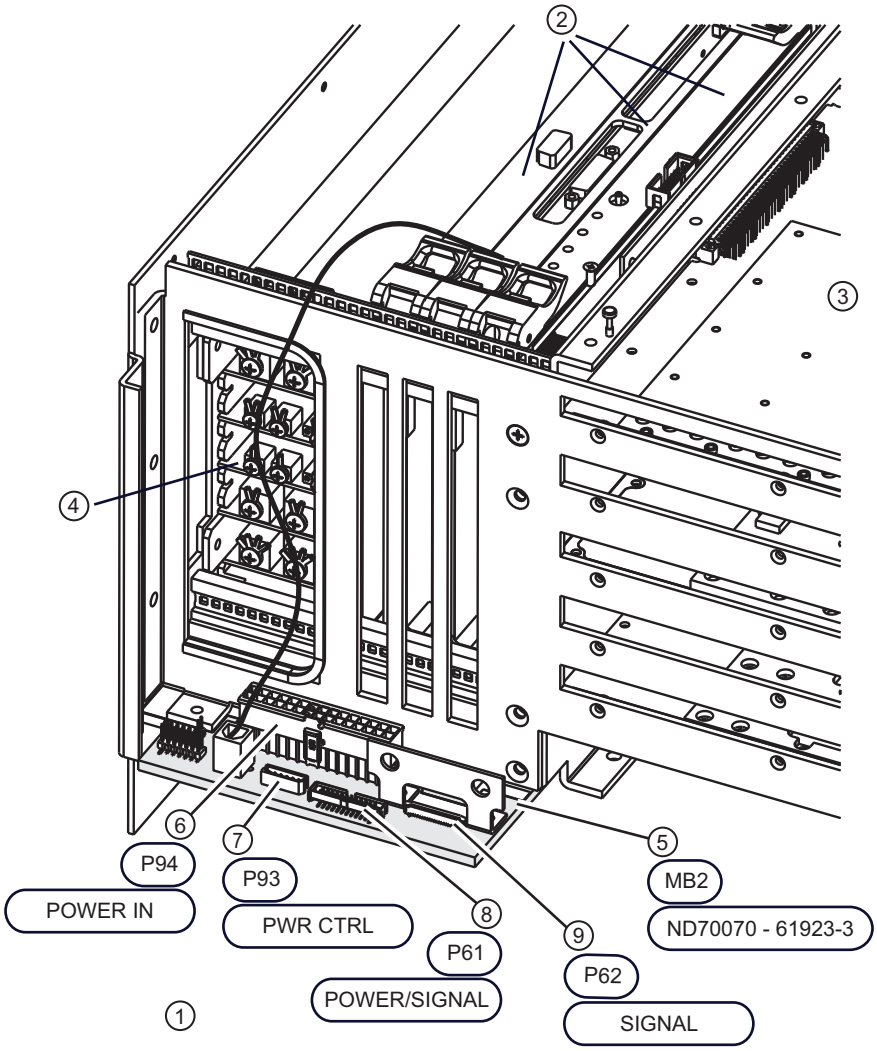

1. Front Panel Assembly – ND70060 – 62078 – Removed for clarity.	5. Motherboard 2 PCB Assembly – ND70069 – 61920-3
2. Phase 1 Digital PCB Assemblies	6. MB2 **P94 Power In Connector** for Power Supply Cable Assembly
3. Analog Module PCB Assemblies	7. MB2 **P93 Pwr Ctrl Connector**
4. Power Supply Module – ND70072 – 62088 – with Power Supply Cable Assembly – 3-70258 removed for clarity.	8. MB2 **P61 Front Panel Connector**
	9. MB2 **P62 Front Panel Connector**

Figure 2-15. Phase 1 – Motherboard 2 PCB Assembly – Front Connectors Detail

Shown below in Figure 2-16, the front of the Motherboard 2 PCB Assembly provides connectors for the Front Panel, as well as signal routing, DC power distribution paths, and backplane connectors to the Digital Section PCBs and the Motherboard 1 PCB Assembly.

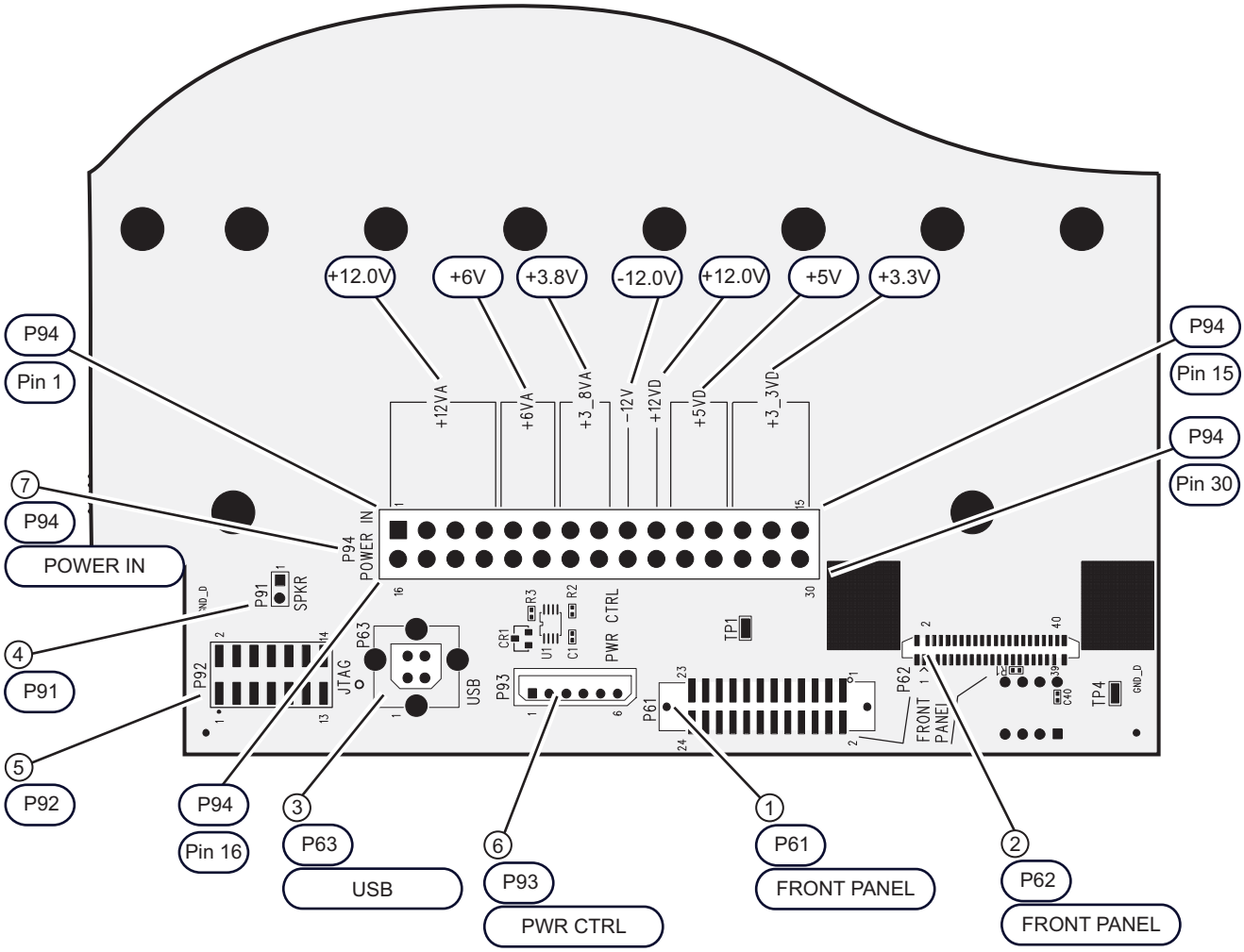

P61 – Front Panel Power and Control Ribbon Cable	P94 +12 V
P62 – Front Panel Signal Ribbon Cable	P94 +6 V
P91 – Speaker (Not Used)	P94 +3.8 V
P92 – JTAG	P94 -12 V
P93 – Power Control Connector	P94 +12 V
P94 – Power In Connector	P94 +5 V
P94 Pin 1	P94 +3.3 V
P94 Pin 15	
P94 Pin 16	
P94 Pin 30	

Figure 2-16. Phase 1 – Motherboard 2 PCB Assembly – ND70070 – 61923-3 – Front

2-15 Front Panel and Connections – Phase 2 VNAs

Phase 2 – Front Panel Assembly – ND73195 – 3-72015

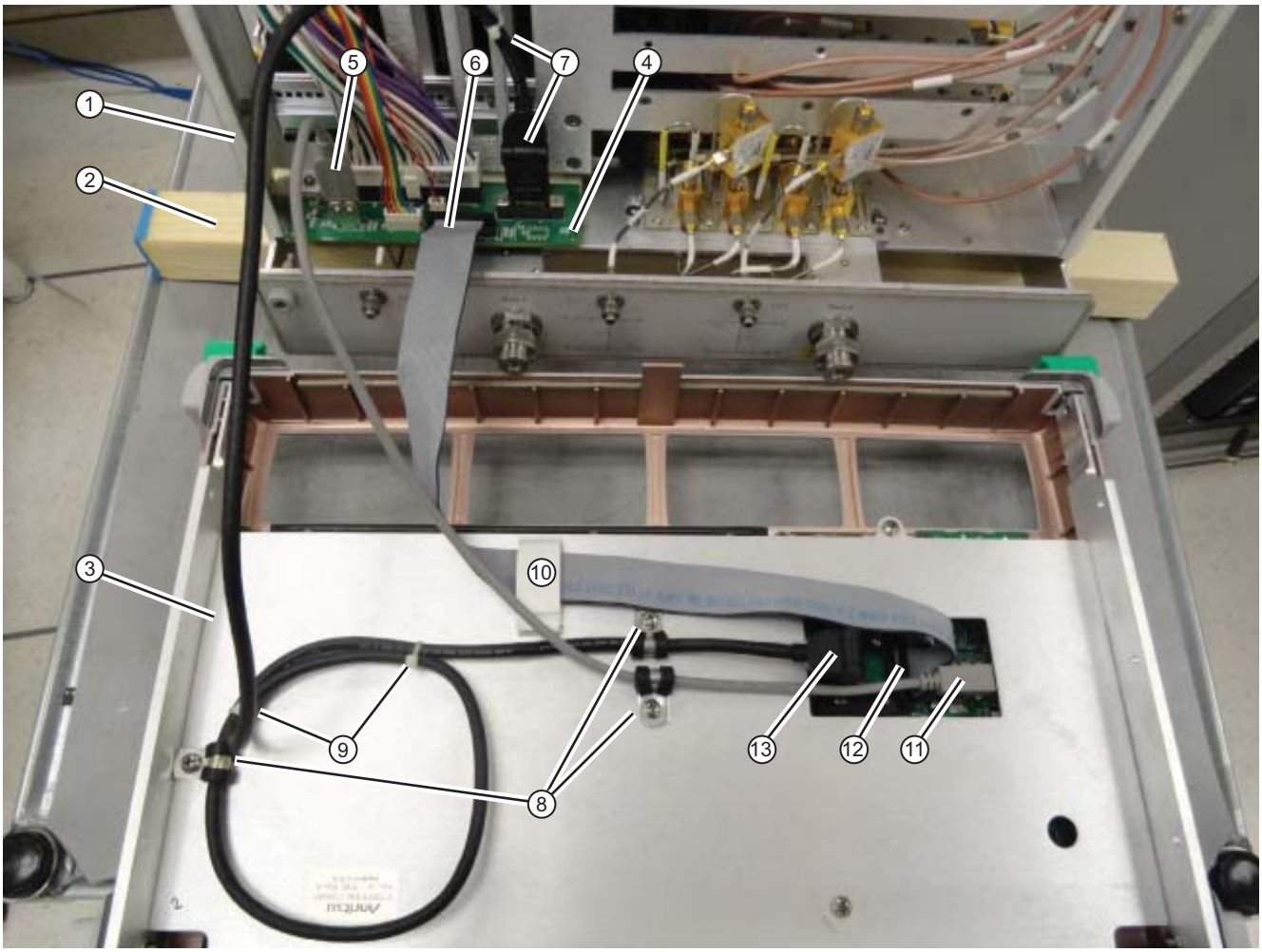

1. VectorStar VNA Instrument Chassis with RF Deck Front Panel and Connectors below.
2. Lumber spacer holding instrument chassis clear of RF Deck loops and connectors.
3. Phase 2 Front Panel Assembly – ND73195 – 3-72015 – Face down with rear connectors
4. Phase 2 Motherboard 2 (MB2) PCB Assembly – ND73878 – 3-72813-3 – Front edge connectors for power and front panel shown.
5. MB2 PCB P63 USB Type A connector with USB cable to Front Panel USB Type B J22 connector.
6. MB2 PCB P61 Power/Signal Ribbon Connector with ribbon cable to Front Panel J6 connector.
7. MB2 PCB P97 HDMI connector with flexible-head HDMI cable to Front Panel HDMI connector. Above the connector, note the cable tie holding the cable to the instrument chassis.
8. Cable clamps and screws holding HDMI cable (2 clamps) and USB cable (1 clamp) in place on the Front Panel chassis.
9. Cable ties holding HDMI cable loop. Do not cut these cable ties.
10. Adhesive-mount ribbon cable clamp. Lift clamp latch to release cable.
11. Front Panel USB connector
12. Front Panel Power/Signal ribbon connector
13. Front Panel HDMI connector

Figure 2-17. Phase 2 Front Panel Assembly – Cable Connections to MB2 PCB

Motherboard 2 PCB – ND73878 – 3-72813-3 – Front Panel Connections

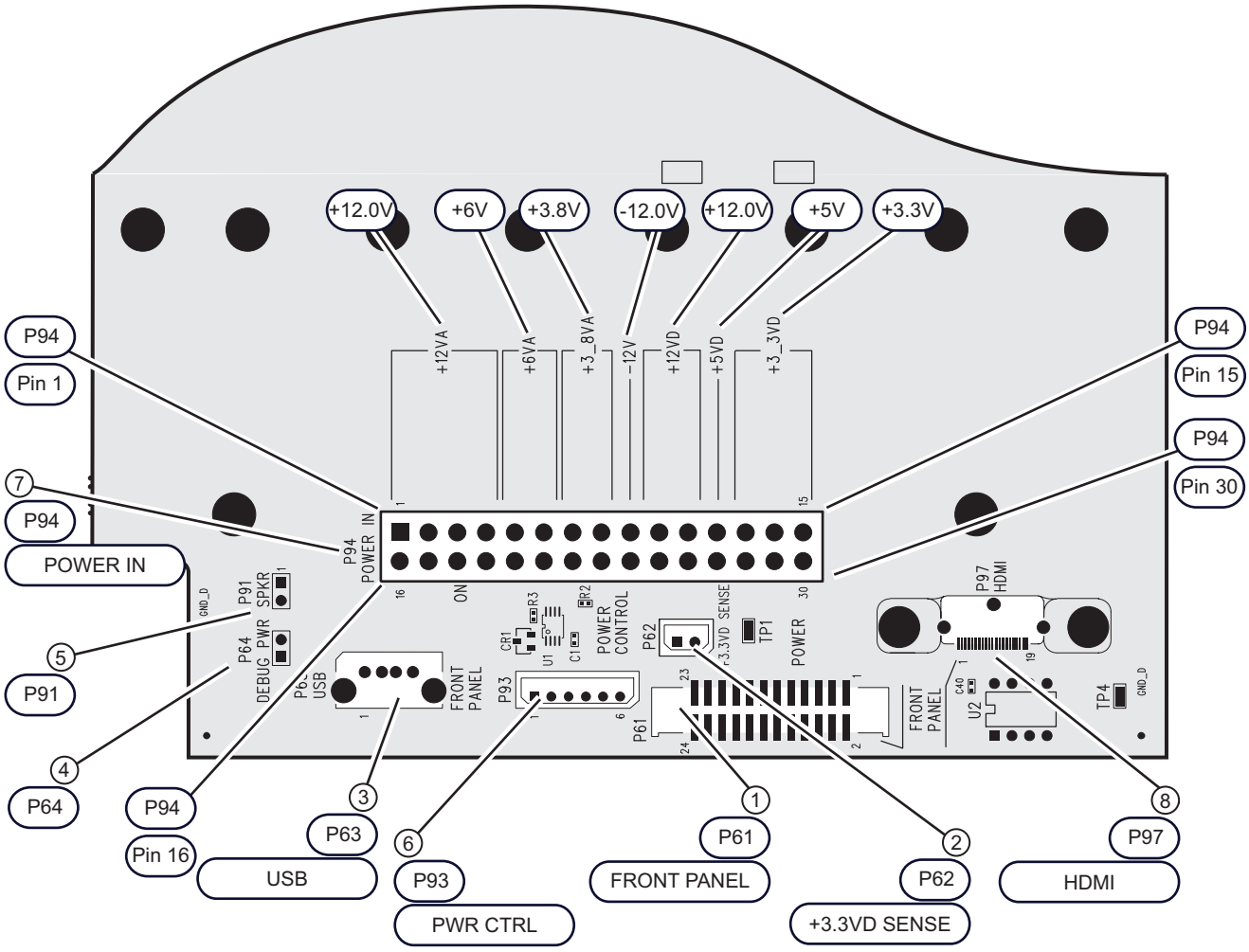

1. P61 – Ribbon Cable Connector to Front Panel	P94 – Connector Pin 1
2. P62 – +3.3 VDC Sense Connector to Power Supply Module	P94 – Connector Pin 15
3. P63 – USB Type A Connector to Front Panel	P94 – Connector Pin 16
4. P64 – Debug Power – Not used	P94 – Connector Pin 30
5. P91 – Speaker – Not used	
6. P93 – Power Control Connector to Power Supply	
7. P94 – Power In Connector to Power Supply	
8. P97 – HDMI Connector to Front Panel	

Figure 2-18. Phase 2 Motherboard 2 PCB Assembly – ND73878 – 3-72813-3 – Front

2-16 RF Deck – Overview

The instrument RF Deck has different configurations depending on the instrument model and the installed options. Each configuration changes the installed modules, connectors, and cables. The combinations are:

- MS4642A 20 GHz VNA – Standard No Options, Option 051, Option 061, Option 062
- MS4644A 40 GHz VNA – Standard No Options, Option 051, Option 061, Option 062
- MS4645A 50 GHz VNA – Standard No Options, Option 051, Option 061, Option 062
- MS4647A 70 GHz VNA – Standard No Options, Option 051, Option 061, Option 062, Option 080/081

where the options are:

- Standard No Options – No loops or attenuators. The instrument only has Test Port 1 and Test Port 2.
- Option 051 – MS464xA-051 – Direct Access Loops
- Option 061 – MS464xA-061 – Active Measurements Suite, with 2 Step Attenuators and Direct Access Loops
- Option 062 – MS464xA-062 – Active Measurements Suite, with 4 Step Attenuators and Direct Access Loops
- Option 080 – MS4647A-080 – Broadband/Millimeter-Wave for MS4647A VNAs without Options 051, 061, or 062.
- Option 081 – MS4647A-081 – Broadband/Millimeter-Wave for MS4647A VNAs with Options 051, 061, or 062

Note	To determine the instrument model number, its serial number, and its installed options, consult the Rear Panel label on the Rear Panel left side at center.

There are some component module commonalities which are briefly described in the next two sections following below. In a later chapter (Chapter 11), replacement procedures in describe how to approach each RF Deck variant, disassemble each module grouping, replace a specific module, and then reassembly and re-install in the RF Deck.

Some of the RF Deck modules form module groups where care must be taken to disassemble the group in the correct sequence until the to-be-replaced module is accessed. The organization and process is described in Chapter 13. Once replaced, the reassembly process must observe strict sequencing to assure the RF connections are correct and that no modules or connecting semi-rigid coaxial cables are damaged.

The RF Deck components can be further divided into Top Side and Bottom Side components. All Bottom Side components can be replaced while the RF Deck remains in the chassis. All Top Side components can only be accessed if the RF Deck is removed from the chassis (described below).

Accessing the RF Deck

In all cases, servicing RF Deck components requires removing the External Cover and the Internal Top Cover, and usually the Front Panel.

RF Deck Remains in Chassis

All RF Deck Bottom Side components can be serviced while the RF Deck remains in the instrument chassis.

RF Deck Removed

To service the RF Deck Top Side modules, the Power Supply Module, the Motherboard 2 PCB Assembly, or the Motherboard 1 PCB Assembly, the RF Deck must be removed from the chassis. Once removed, it is recommended that the T3545 Test Fixture be installed on the deck to protect the loops and modules. The fixture is described in Section B-2 “T3545 RF Deck Fixture” on page B-1.

If the RF Deck is to be removed, the Front Panel Assembly (described below) must be removed.

2-17 RF Deck – Bottom Side – A18 PCB Modules

These modules are mounted on or through the bottom side A18 PCB assembly and vary depending instrument model number and equipped options. Each model variant of the A18 PCB configuration is shown below in Figure 2-19, Figure 2-20, and Figure 2-21.

MS4642A A18 RF Control PCB Configuration

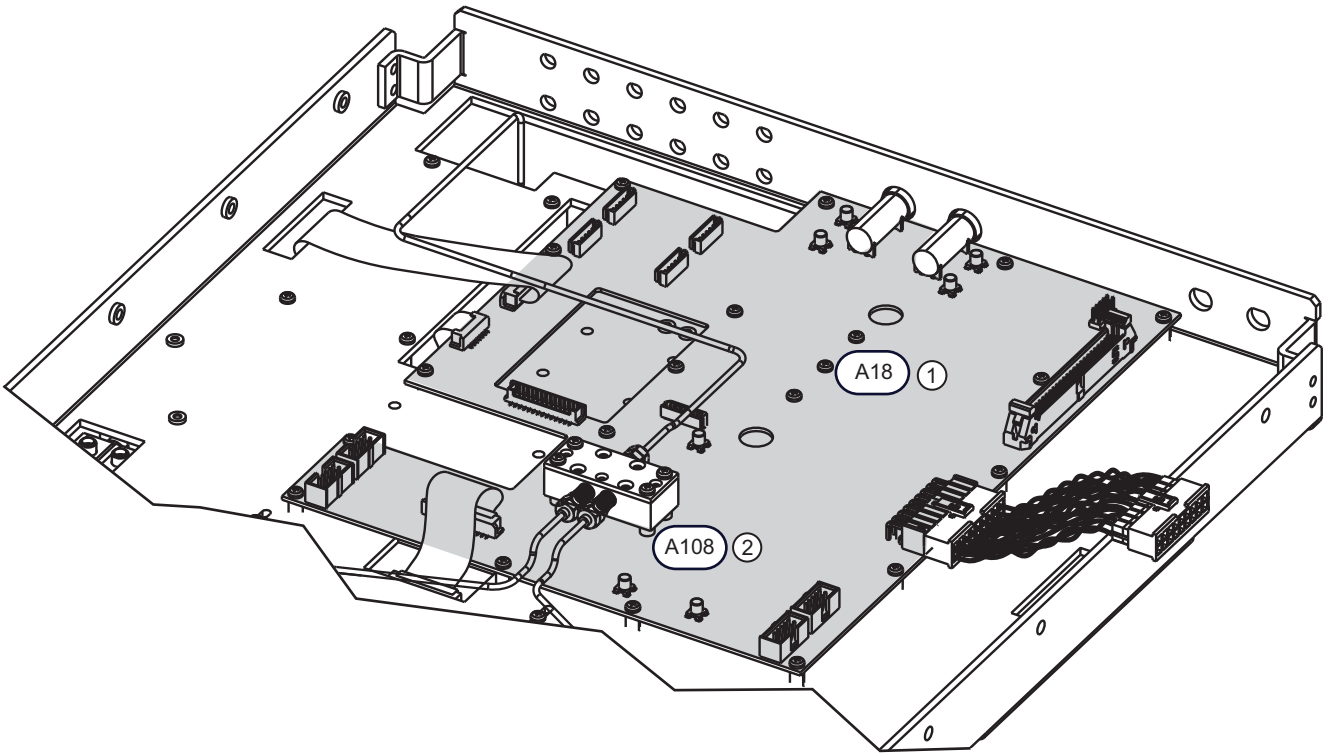

MS4642A 20 GHz VNA – RF Deck Bottom Side – A108 Module and A18 PCB The A108 module and A17 PCB can be replaced while the RF Deck remains in the instrument chassis.	1. A18 RF Control PCB Assembly – ND70068 – 61929-3 2. A108 High Band Transfer Switch, 40 GHz – ND70092 – 66221

Figure 2-19. MS4642A 20 GHz VNA - RF Deck - A18 Module and PCB

MS4644A A18 RF Control PCB Configuration

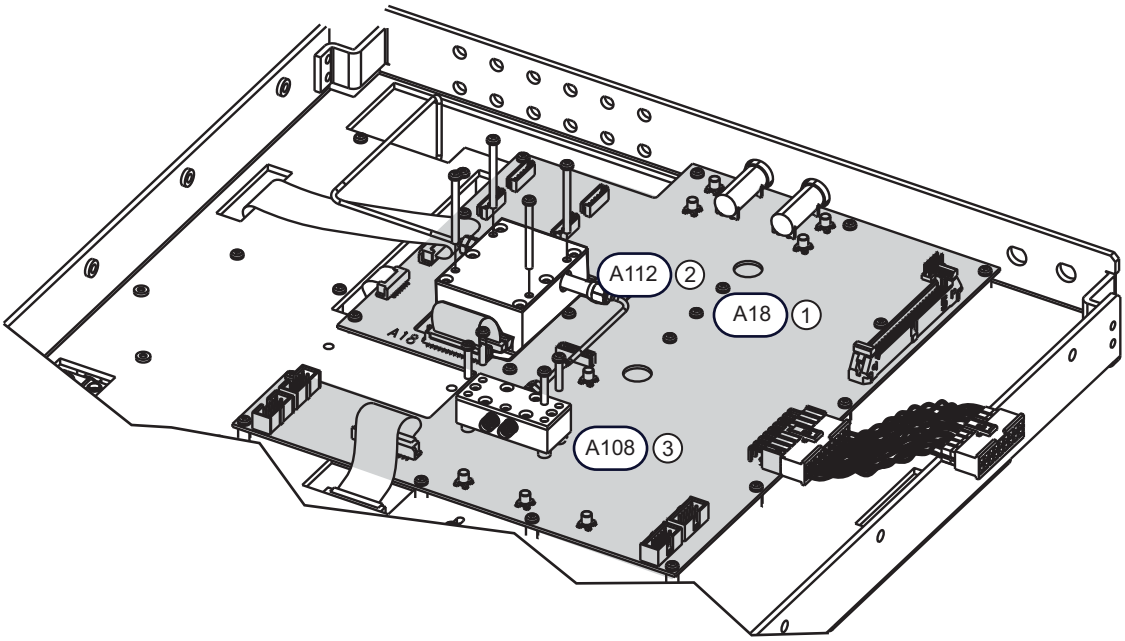

RF Deck A18 Modules and PCB – MS4644A 40 GHz VNA The A18 modules and PCB are replaceable while the RF Deck remains in the instrument chassis.	1. A18 RF Control PCB Assembly – ND70068 – 61929-3 2. A112 Switched Doubler Module (A112 SDM) – ND70098 – 59772 3. A108 High Band Transfer Switch, 40 GHz – ND70092 – 66221

Figure 2-20. MS4644A 40 GHz VNA - RF Deck - A18 Modules and PCB

MS4645A / MS4647A A18 RF Control PCB Configuration

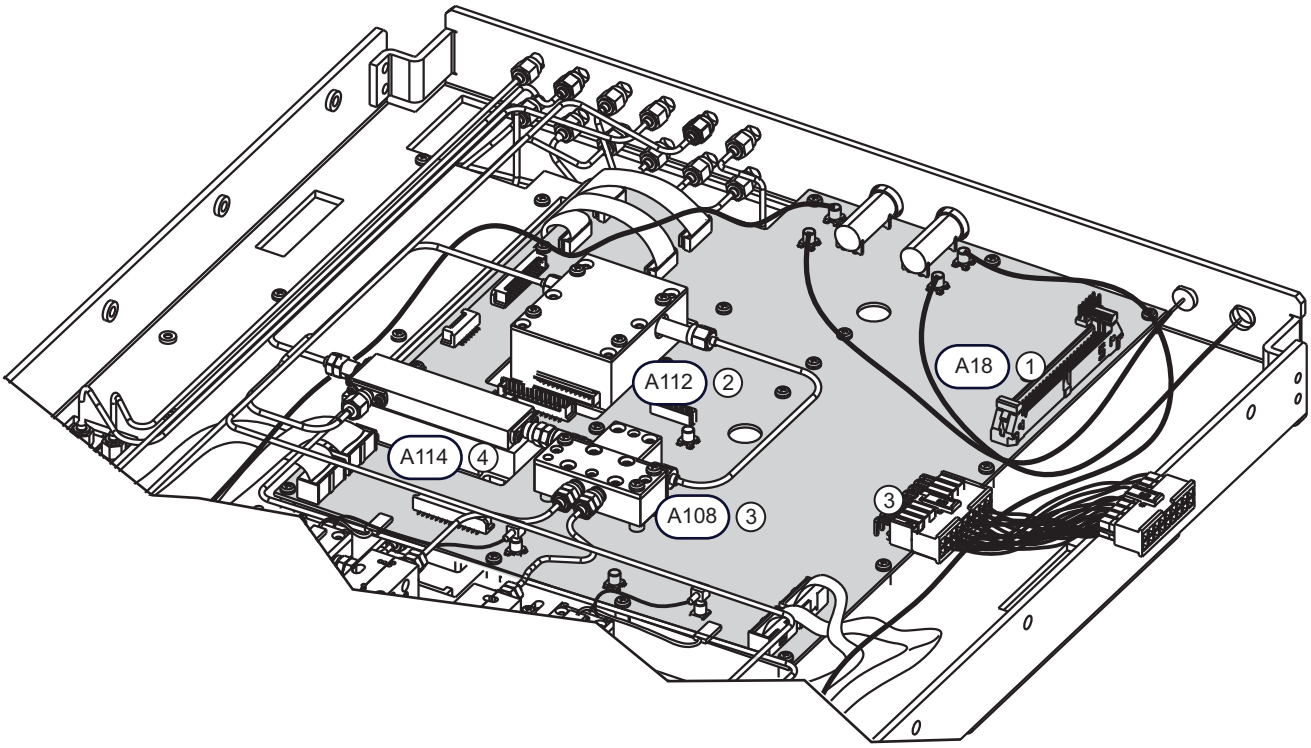

MS4645A 50 GHz and MS4647A 70 GHz VNA – RF Deck – Bottom Side – A18 modules and PCB The A18 modules and PCB can be replaced while the RF Deck remains in the instrument chassis.	1. A18 – A18 RF Control PCB Assembly (A18 PCB) – ND70068 – 61929-3 2. A112 – A112 Switched Doubler Module (A112 SDM) – ND70098 – 59772 3. A114 – A114 Switched Quadrupler Module (A114 SQM) – ND70099 – 60-327 4. A108 – A108 V Integrated High Band Transfer Switch (A108 VITS), 70 GHz – ND70093 – 66619

Figure 2-21. MS4645A 50 GHz and MS4647A 70 GHz VNAs - RF Deck - A18 PCB Modules

MS4647A with Option 080/081 A18 RF Control PCB Configuration

The RF Deck Bottom Side A18 RF Control PCB configuration for the MS4647A with Option 080/081 is the same as MS4647A configurations for Standard No Options, Option 051, Option 061, and Option 062 with the addition of the A133 20 - 40 GHz Coupler Module located between the A112 Switched Doubler Module and the A108 V Integrated High Band Transfer Switch.

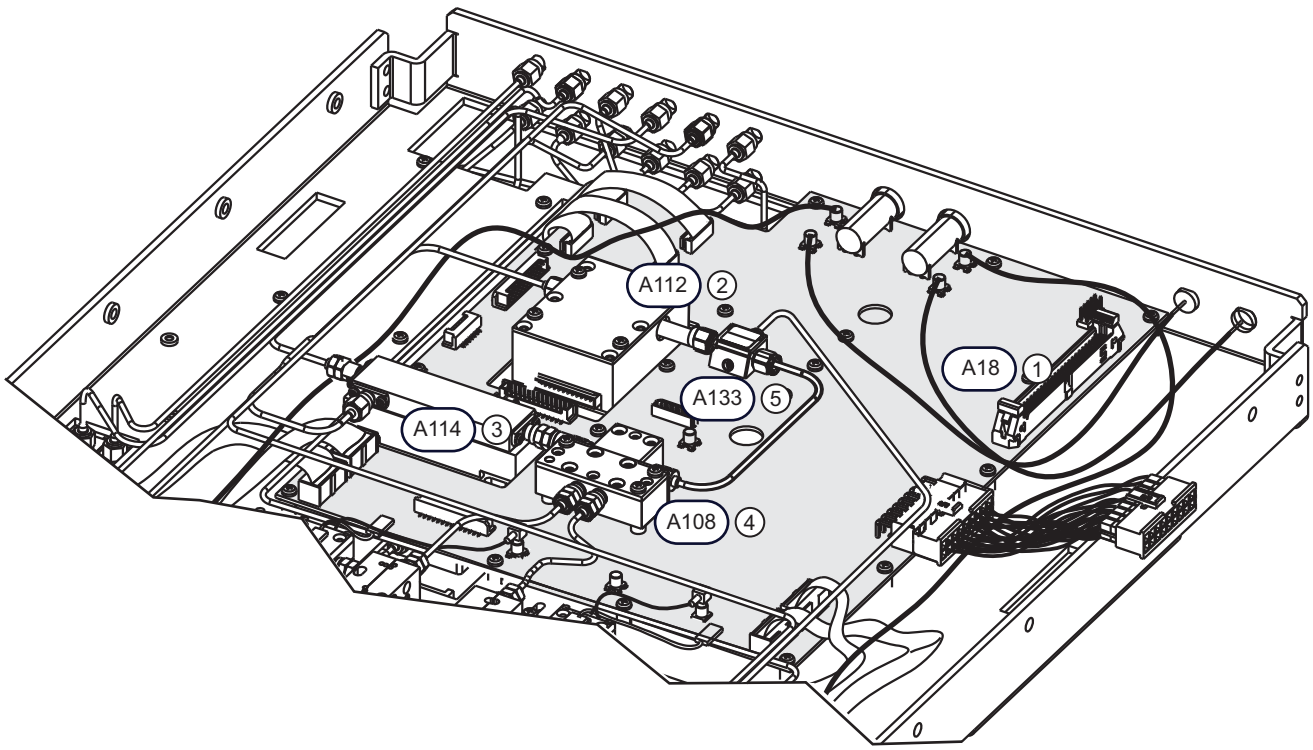

The MS4647A with Option 080/081 VNA RF Deck Bottom Side modules are the same for RF Decks with Standard and Option 080 or Option 051, 061, or 062 with Option 081. 1. A18 – A18 RF Control PCB Assembly (A18 PCB) – ND70068 – 61929-3 – The A18 modules and PCB can be replaced while the RF Deck remains in the instrument chassis.	2. A112 Switched Doubler Module (A112 SDM) – ND70098 – 59772 3. A114 Switched Quadrupler Module (A114 SQM) – ND70099 – 60-327 4. A108 V Integrated High Band Transfer Switch (A108 VITS), 70 GHz – ND70093 – 66619 5. A133 20-40 GHz RF Coupler Module (A133 RCM) – No ND – 72237

Figure 2-22. RF Deck Bottom Side Modules - MS4647A with Option 080/081

2-18 RF Deck – Bottom Side – Port Modules – MS4647A 70 GHz – Option 062

The RF Deck variants and their components are described in greater detail in Chapter 11, “RF Deck Module Replacement Overview”. Individual module replacement procedures divided into separate chapters as:

- Chapter 12, “RF Deck Bottom Side A18 Modules and PCB”
- Chapter 13, “RF Deck Bottom Side Port Modules”
- Chapter 14, “RF Deck Removal and Installation”
- Chapter 15, “RF Deck Top Side Modules”

Figure 2-23 below shows the RF Deck Bottom Side modules for the VectorStar MS4647A VNA equipped with Option 062 – Front Panel Loops and Four Attenuators.

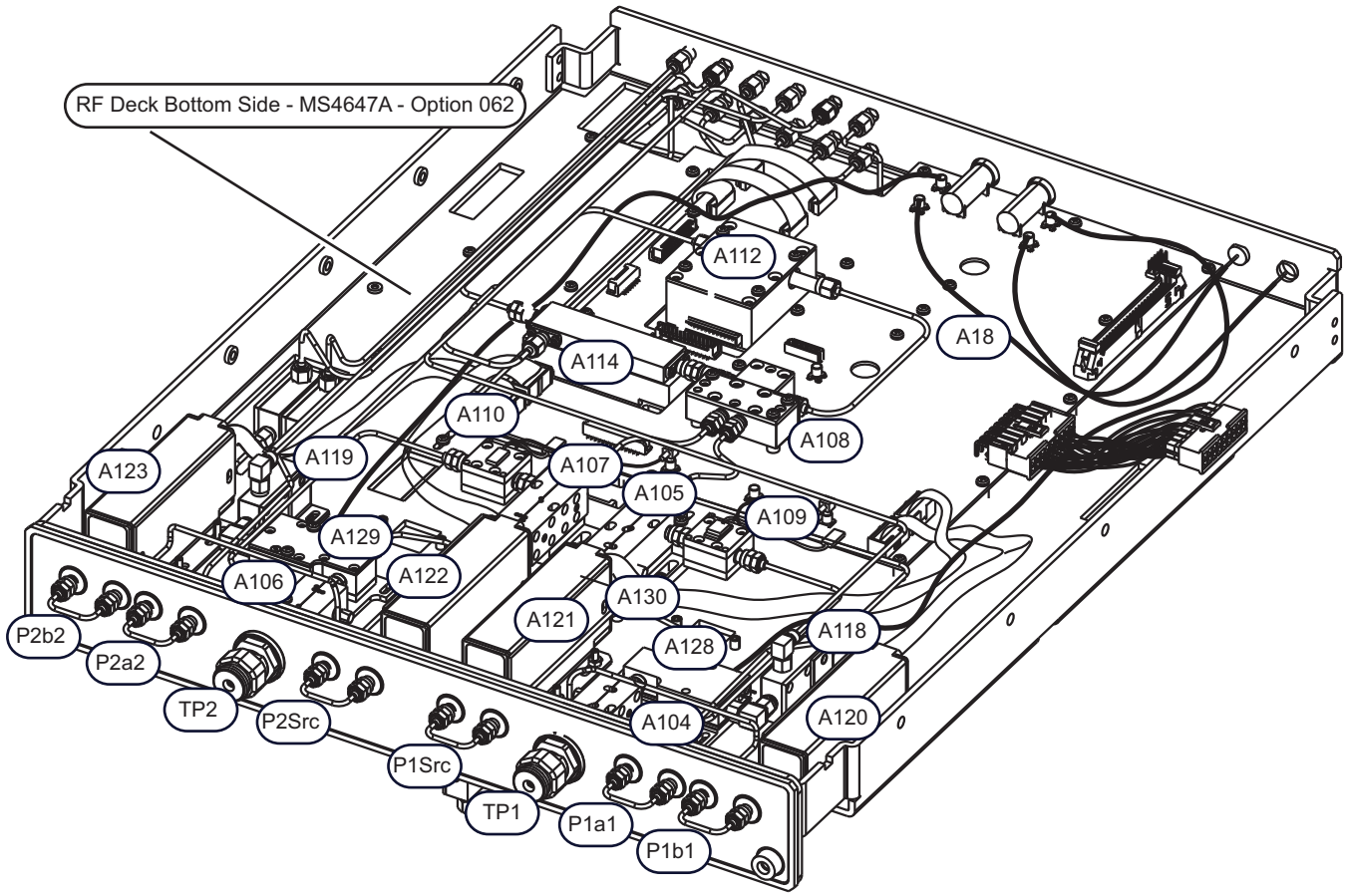

Figure 2-23. RF Deck Bottom Side Modules - MS4647A with Option 062 Shown (1 of 2)

Test Ports (from left to right)
- P2 b2 – Port 2 Test Receiver b2 – High Band Step Attenuator connected to this loop in RF Deck Bottom Side.
- P2 a2 – Port 2 Reference Receiver a2 – There are no modules connected directly to Port 2 a2.
- TP2 – Test Port 2
- P2 Src – Port 2 Source – High Band Step Attenuator connected to this loop in RF Deck Bottom Side.
- P1 Src – Port 1 Source – High Band Step Attenuator connected to this loop in RF Deck Bottom Side.
- TP1 – Test Port 1
- P1 a1 – Port 1 Reference Receiver a1 – There are no modules connected directly to Port 1 a1.
- P1 b1 – Port 1 Test Receiver b1 – High Band Step Attenuator connected to this loop in RF Deck Bottom Side.

RF Control Modules
- A112 – Switched Doubler Module – ND70098 – 59772
- A108 – V Integrated High Band Transfer Switch (A108 VITS) – ND70093 – 66619
- A114 – Switched Quadrupler Module (A114 SQM) – ND70099 – 60-327

Port 2 Test Attenuator b2
- A123 – High Band Step Attenuator, V Connector – No ND – 66050

Test Port 2
- A106 – Test Coupler, V Connector, 70 GHz – No ND – 66245
- A129 – Diplexer/Bias Tee Module, Port 2, 70 GHz – ND73943 – 74278
- A119 – Low Band Bridge – ND70078 – 64016

Port 2 Source
- A122 – High Band Step Attenuator, V Connector – No ND – 66050
- A107 – Reference Coupler 70 GHz – No ND – 65270
- A110 – Level Detector, Port 2, V Connector, 70 GHz – ND72126 – 67389-2

Port 1 Source

A121 – High Band Step Attenuator, V Connector – No ND – 66050

A105 – Reference Coupler 70 GHz – No ND – 65270

Test Port 1
- A104 – Test Coupler, V Connector, 70 GHz – No ND – 66245
- A128 – Diplexer/Bias Tee Module, Port 1, 70 GHz – ND70090 – 64911
- A118 – Low Band Bridge – ND70078 – 64016

Port 1 Test Receiver b1
- A120 – High Band Step Attenuator, V Connector – No ND – 66050

Figure 2-23. RF Deck Bottom Side Modules - MS4647A with Option 062 Shown (2 of 2)

2-19 RF Deck – Top Side – Right Side Modules

The RF Deck Top Side modules vary depending on whether Standard No Options, Option 051, Option 061, or Option 062 is equipped. The module part numbers and engineering reference numbers are the same for all instrument models. Each top side variant is described in the figures below.

2-20 Top Side Modules – Right Side

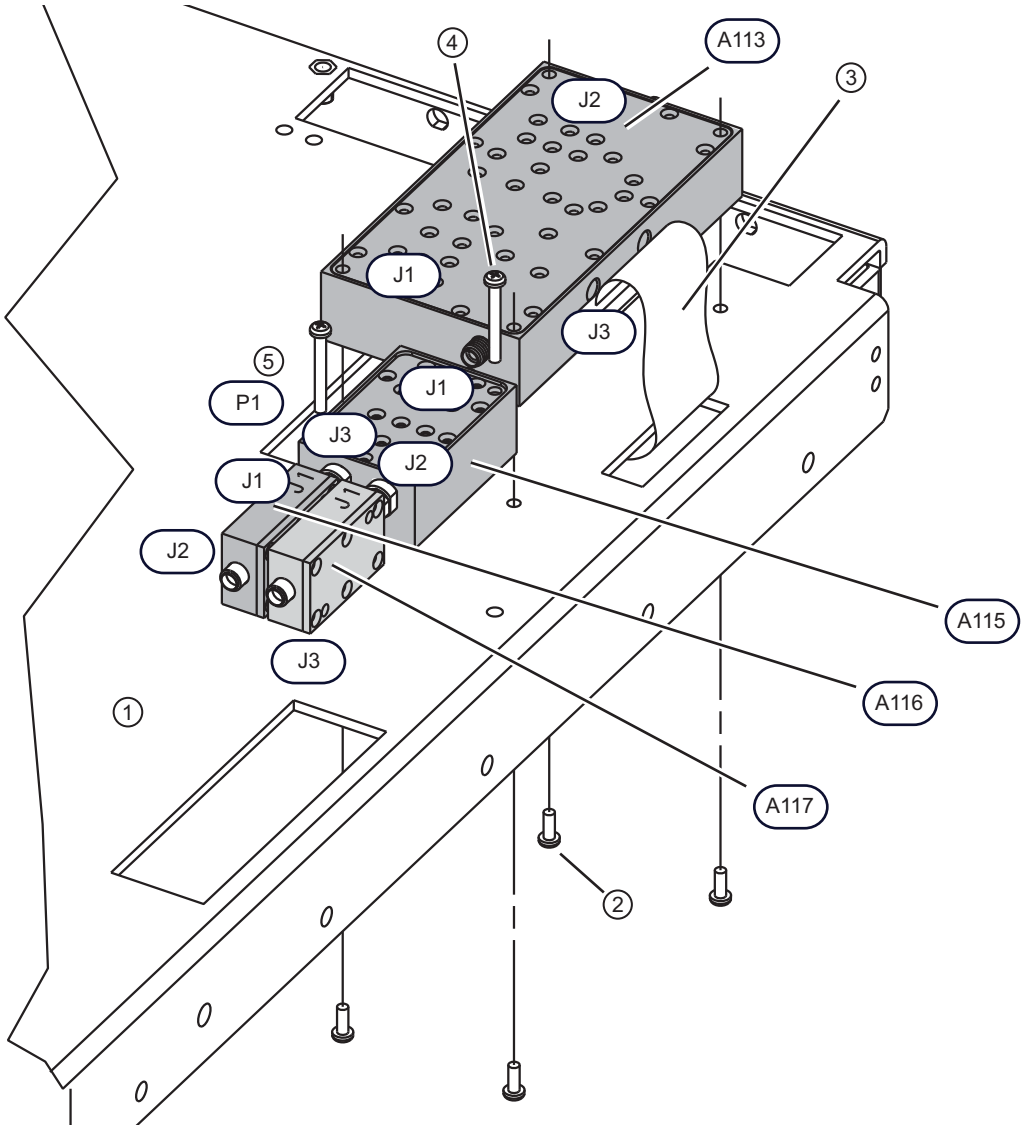

Figure 2-24. RF Deck Top Right Side Modules – A113, A115, A116, and A117 (1 of 2)

RF Deck

1. RF Deck Top Side. The Front Panel and the RF Deck have been removed from the instrument chassis.

A113 5-20 GHz Doubler Module – ND70080 – 64920

2. Four (4) pan head Phillips M3 × 8 mm mounting screws from the RF Deck Bottom Side into the A113 5-20 GHz Doubler Module.
3. Ribbon cable from A113 J3 connector to RF Deck Bottom Side A18 RF Control PCB Assembly P6 connector.
   - J1 Connector – Towards front.
   - J2 Connector – Towards rear.

A115 Low Band Transfer Switch Module – ND70079 – 64690

4. Two (2) pan head Phillips M3 × 30 mm mounting screws through the A115 Low Band Transfer Switch Module into the RF Deck chassis.

A115 Connectors

5. Ribbon cable (not shown here) from A115 P1 connector to RF Deck Bottom Side A18 PCB P1 connector.
   - J1 Connector – Towards rear.
   - J2 Connector – Outer connector, towards front.
   - J3 Connector – Inner connector, towards front.

A116 and A117 Low Band Bridge Modules

- A116 – Low Band Bridge Module – ND70079 – 64016
  - The A116 in the inner module.
- A117 – Low Band Bridge Module – ND70079 – 64016
  - The A117 is the outer module.
- Note that there are four (4) Low Band Bridge Modules modules in the instrument which are the same part.
- Two here (A116, A117) on the RF Deck Top Side and two (A118, A119) in Test Port 1 and 2 module groups on the RF Deck Bottom Side.

A116/A117 Connectors

- J1 Connector – Towards rear.
- J2 Connector – Towards front.
- J3 Connector – Towards RF Deck Bottom Side (not shown here)

Figure 2-24. RF Deck Top Right Side Modules – A113, A115, A116, and A117 (2 of 2)

2-21 RF Deck – Top Side – Attenuator Modules

RF Deck Top Side Option 061 Low Band Attenuators

As shown in Figure 2-25 below, only the A125 and A127 attenuators are installed on instruments with Option 061.

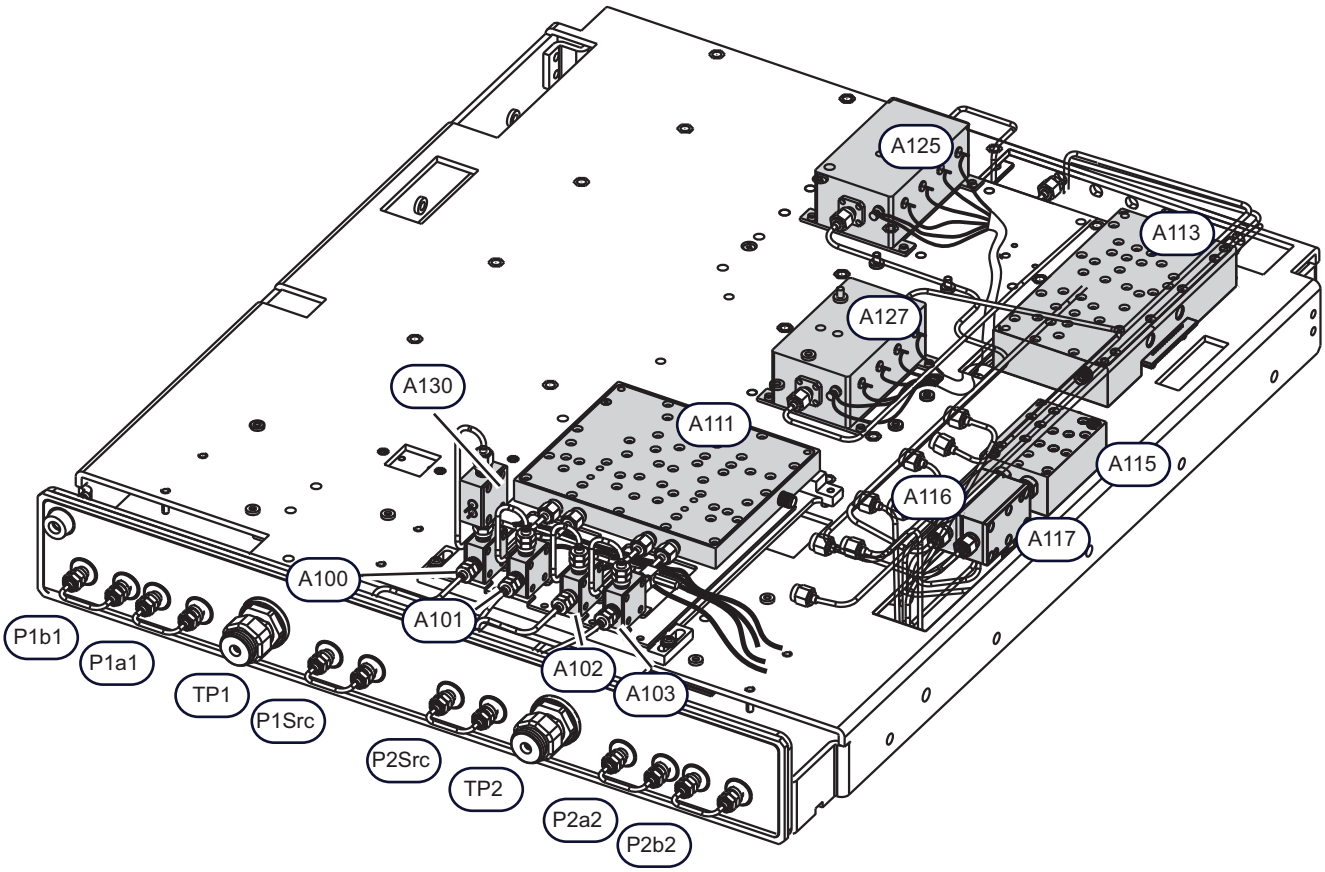

Figure 2-25. RF Deck Top Side Modules – Option 061 – Loops and Two Attenuators (1 of 2)

Low Band Attenuators

- A125 – Low Band Port 1 Source (P1 Src) Attenuator – ND70084 – 3-2000-1502
- A127 – Low Band Port 2 Test (P2 b2) Attenuator – ND70087 – 3-2000-1502

Right Side Modules

- A113 – 5-20 GHz Doubler Module – ND70080 – 64920
- A115 – Low Band Transfer Switch – ND70079 – 64690
- A116 – Low Band Bridge Module – ND70078 – 64016 – Inner Module
- A117 – Low Band Bridge Module – ND70078 – 64016 – Outer Module

SLODM Assembly

The Sampler/LO Distribution Module (SLODM) Assembly consists of the following components:

- A111 – LO Distribution Module Assembly – ND70081 – 62084
- A100 – Sampler Module – ND70082 – 64180
  - The A100, A101, A102, and A103 mount in sockets on the A111.
- A101 – Sampler Module – ND70082 – 64180
- A102 – Sampler Module – ND70082 – 64180
- A103 – Sampler Module – ND70082 – 64180
- A130 – LO Coupler Module – ND70083 – 68848
  - If present, mounts on top of either the A11 or A101 Sampler Module.

Front Panel Ports

- P1 b1, P1 a1, TP1, and P1 Src – Front Panel test ports for Port 1.
- P2 Src, TP2, P2 a2, and P2 b2 – Front Panel test ports for Port 2.

Figure 2-25. RF Deck Top Side Modules – Option 061 – Loops and Two Attenuators (2 of 2)

RF Deck Top Side Modules – Option 062 Low Band Attenuators

As shown in Figure 2-26 below, on instruments equipped with Option 062, all four attenuators are installed.

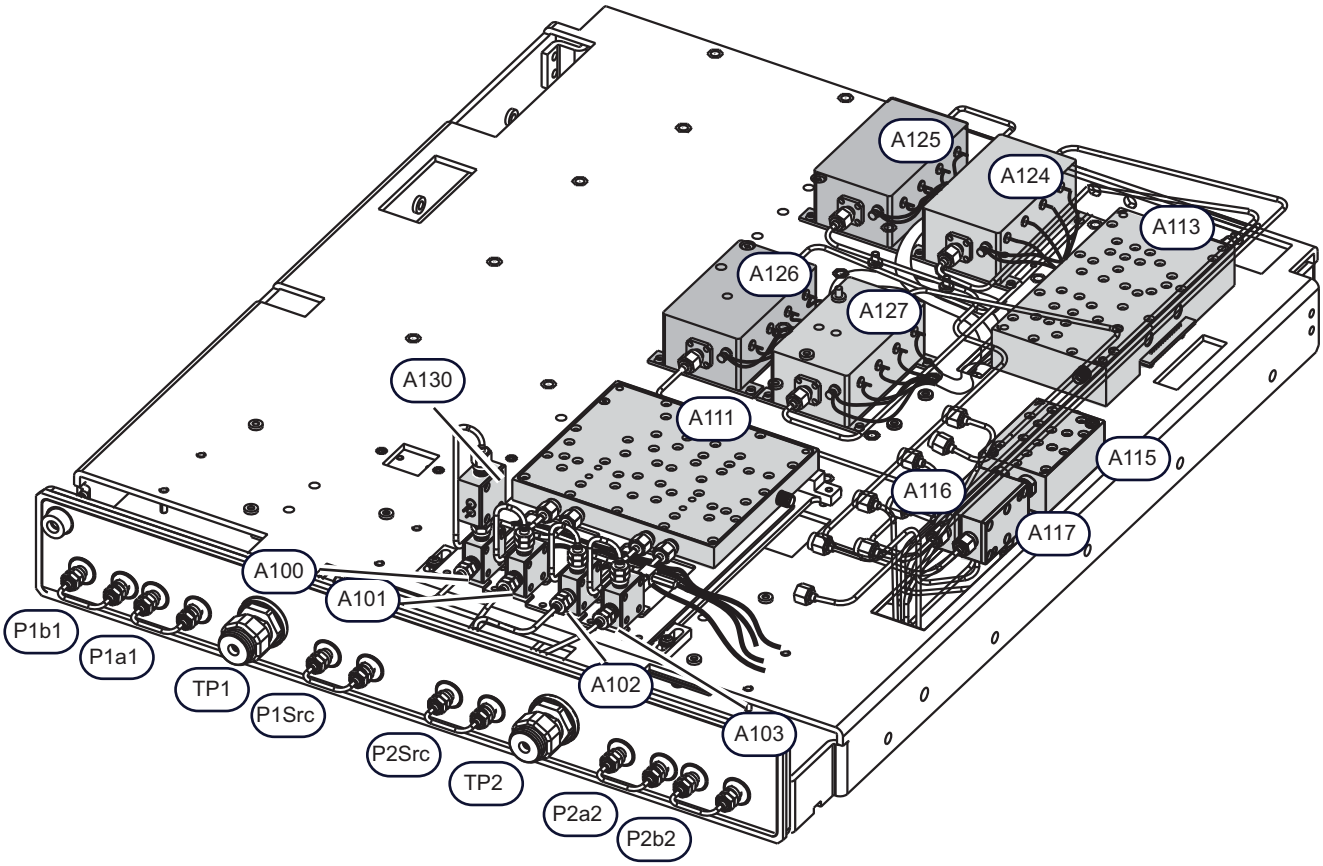

Low Band Attenuators

- A124 Low Band Port 1 Test (P1 b1) Attenuator – ND70085 – 3-2000-1502
- A125 Low Band Port 1 Source (P1 Src) Attenuator – ND70084 – 3-2000-1502
- A126 Low Band Port 2 Source (P2 Src) Attenuator – ND70086 – 3-2000-1502
- A127 Low Band Port 2 Test (P2 b2) Attenuator – ND70087 – 3-2000-1502

Right Side Modules

- A113 5-20 GHz Doubler Module – ND70080 – 64920
- A115 Low Band Transfer Switch – ND70079 – 64690
- A116 Low Band Bridge Module – ND70078 – 64016 – Inner Module
- A117 Low Band Bridge Module – ND70078 – 64016 – Outer Module

Sampler/LO Distribution Module Assembly

The Sampler/LO Distribution Module Assembly consists of the following six (6) components:

- A111 LO Distribution Module Assembly – ND70081 – 62084 or ND73193 – 72440
- A100 Sampler Module – ND70082 – 64180 – The A100-A103 mount in sockets on the A111.
- A101 Sampler Module – ND70082 – 64180
- A102 Sampler Module – ND70082 – 64180
- A103 Sampler Module – ND70082 – 64180
- A130 LO Coupler Module – ND70083 – 68848 – If present, mounts on top of the A100 or A101.
- A131 LO Coupler Module – No ND – 70685 – If present, mounts on top of the A101.
- A132 LO Coupler Module – No ND – 70685 – If present, mounts on top of the A103.

Front Panel Ports

- Port 1 Test Ports – P1 b1, P1 a1, TP1, and P1 Src
- Port 2 Test Ports – P2 Src, TP2, P2 a2, and P2 b2

Figure 2-26. RF Deck Top Side Modules – Option 062 – Loops and Four Attenuators

2-22 RF Deck – Top Side – Sampler/LO Distribution Module Assembly

The figures below show the five (5) Sampler/LO Distribution Module (SLODM) Assembly variants and their components. The SLODM Assemblies vary depending on the instrument S/N, model, phase, and equipped options.

SLODM Assembly – 62084 B – Components

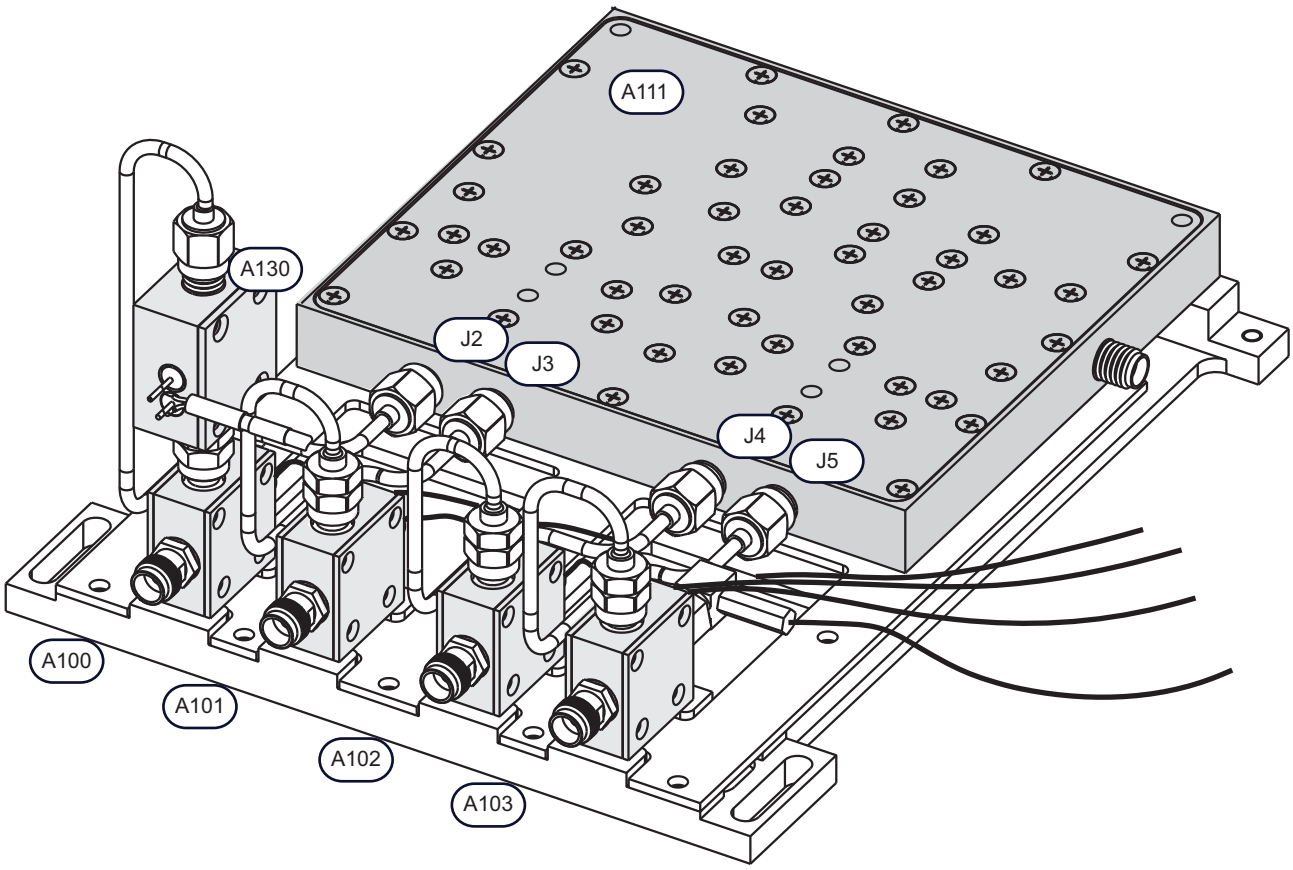

Figure 2-27. SLODM Assembly – 62084 B – Components (1 of 2)

SLODM Assembly – 62084 Revision B

For VNAs with S/N 1051172 and below, except S/N 1034144. The 62084 B SLODM assembly consists of the following six (6) components:

- A111 LO Distribution Module – ND70081 – 62084
- A100 Sampler Module – ND70082 – 64180
- A101 Sampler Module – ND70082 – 64180
- A102 Sampler Module – ND70082 – 64180
- A103 Sampler Module – ND70082 – 64180
- A130 LO Coupler Module – ND70083 – 68848 – Mounts on top of the A100.

A100-A103 Sampler Module Connectors

- J1 – Front
- J2 – Top
- J3 – Rear
- -5V Pin – Bottom Rear
- +5v Pin – Bottom Front
- Each Sampler Module is held to the A111 with two (2) pan head Phillips M2.5 × 10 mm screws.

A130 LO Coupler Module Connectors

- J1 – Top
- J2 – Bottom
- J3 – Front facing pin above J4
- J4 – Front facing pin below J3

A111 LO Distribution Module Assembly

- J1 – Right side towards rear
- J2 – Front facing left
- J3 – Front facing left center
- J4 – Front facing right center
- J5 – Front facing right
- Position 1 – 2-Pin Socket for A100 – At left
- Position 2 – 2-Pin Socket for A101 – At left center
- Position 3 – 2-Pin Socket for A102 – At right center
- Position 4 – 2-Pin Socket for A103 – At right

Figure 2-27. SLODM Assembly – 62084 B – Components (2 of 2)

SLODM Assembly – 62084 B – Exploded View

All SLODM Assembly variants are identical mechanically. Use the figure below as a guide to a SLODM disassembly and reassembly.

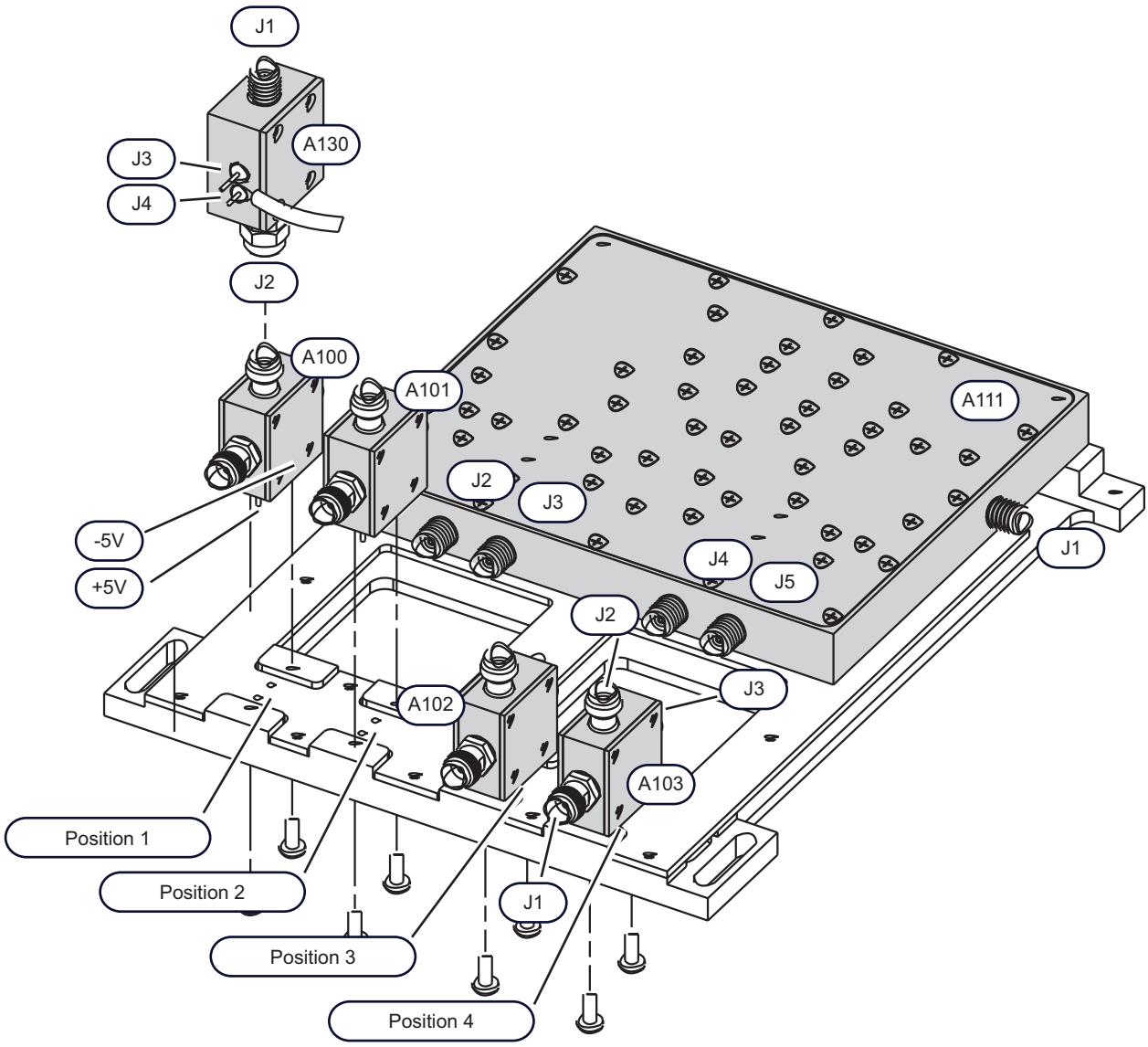

Figure 2-28. SLODM Assembly – 62084 B – Exploded View (1 of 2)

SLODM Assembly – 62084 Revision B

For VNAs with S/N 1051172 and below, except S/N 1034144. The 62084 B SLODM assembly consists of the following six (6) components:

- A111 LO Distribution Module – ND70081 – 62084
- A100 Sampler Module – ND70082 – 64180
- A101 Sampler Module – ND70082 – 64180
- A102 Sampler Module – ND70082 – 64180
- A103 Sampler Module – ND70082 – 64180
- A130 LO Coupler Module – ND70083 – 68848 – Mounts on top of the A100.

A100-A103 Sampler Module Connectors

- J1 – Front
- J2 – Top
- J3 – Rear
- -5V Pin – Bottom Rear
- +5v Pin – Bottom Front
- Each Sampler Module is held to the A111 with two (2) pan head Phillips M2.5 × 10 mm screws.

A130 LO Coupler Module Connectors

- J1 – Top
- J2 – Bottom
- J3 – Front facing pin above J4
- J4 – Front facing pin below J3

A111 LO Distribution Module Assembly

- J1 – Right side towards rear
- J2 – Front facing left
- J3 – Front facing left center
- J4 – Front facing right center
- J5 – Front facing right
- Position 1 – 2-Pin Socket for A100 – At left
- Position 2 – 2-Pin Socket for A101 – At left center
- Position 3 – 2-Pin Socket for A102 – At right center
- Position 4 – 2-Pin Socket for A103 – At right

Figure 2-28. SLODM Assembly – 62084 B – Exploded View (2 of 2)

SLODM Assembly – 62084 C – Components

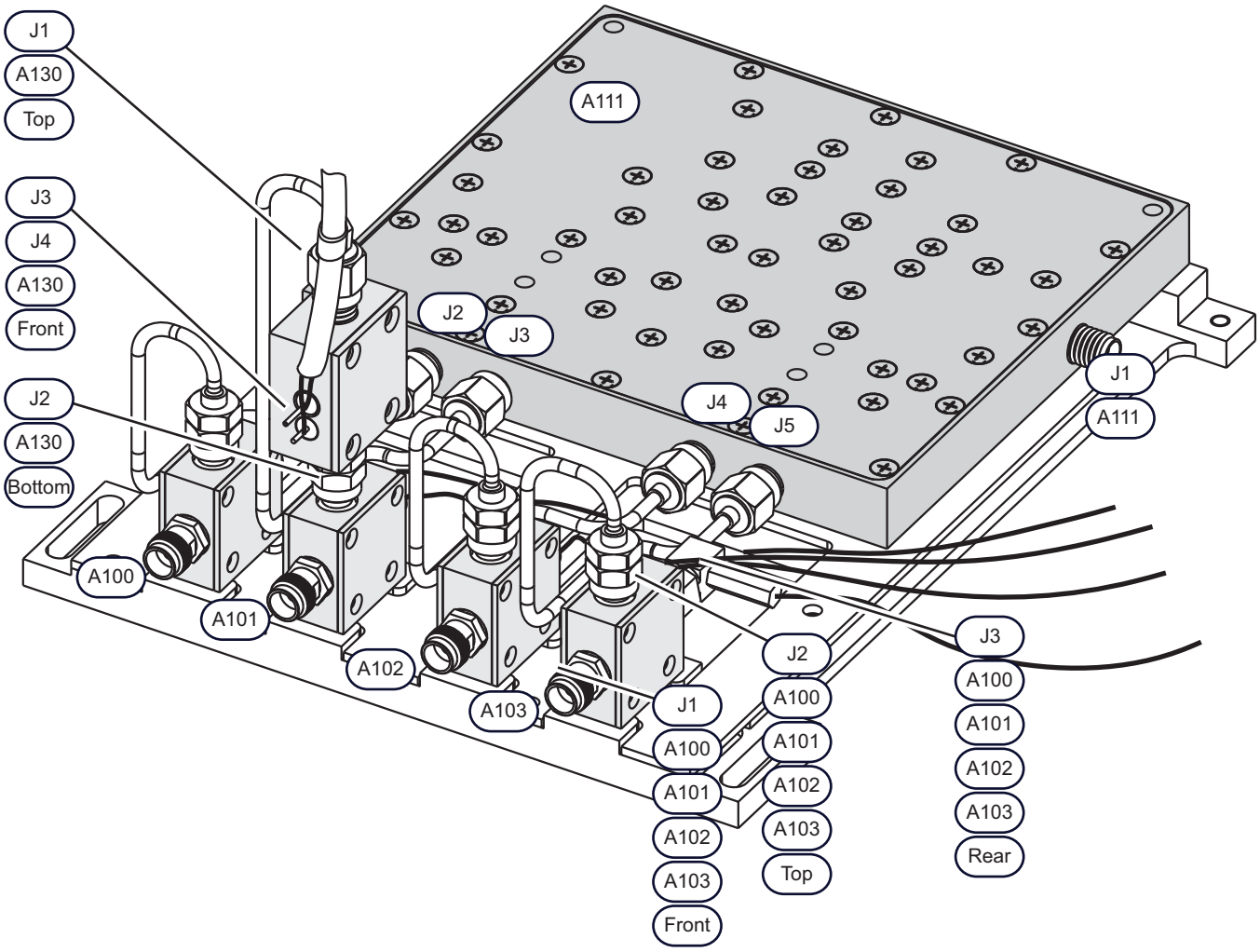

Figure 2-29. SLODM Assembly – 62084 C – Components (1 of 2)

SLODM Assembly – 62084 Revision C

For VNAs with S/N 1034144, S/N 1051173 and above to S/N 1120219. The 62084 C SLODM assembly consists of the following six (6) components:

- A111 LO Distribution Module – ND70081 – 62084
- A100 Sampler Module – ND70082 – 64180
- A101 Sampler Module – ND70082 – 64180
- A102 Sampler Module – ND70082 – 64180
- A103 Sampler Module – ND70082 – 64180
- A130 LO Coupler Module – ND70083 – 68848 – Mounts on top of the A101.

A100-A103 Sampler Module Connectors

- J1 – Front
- J2 – Top
- J3 – Rear
- -5V Pin – Bottom Rear
- +5v Pin – Bottom Front
- Each Sampler Module is held to the A111 with two (2) pan head Phillips M2.5 × 10 mm screws.

A130 LO Coupler Module Connectors

- J1 – Top
- J2 – Bottom
- J3 – Front facing pin above J4
- J4 – Front facing pin below J3

A111 LO Distribution Module Assembly

- J1 – Right side towards rear
- J2 – Front facing left
- J3 – Front facing left center
- J4 – Front facing right center
- J5 – Front facing right
- Position 1 – 2-Pin Socket for A100 – At left
- Position 2 – 2-Pin Socket for A101 – At left center
- Position 3 – 2-Pin Socket for A102 – At right center
- Position 4 – 2-Pin Socket for A103 – At right

Figure 2-29. SLODM Assembly – 62084 C – Components (2 of 2)

SLODM Assembly – 73231 A – Components

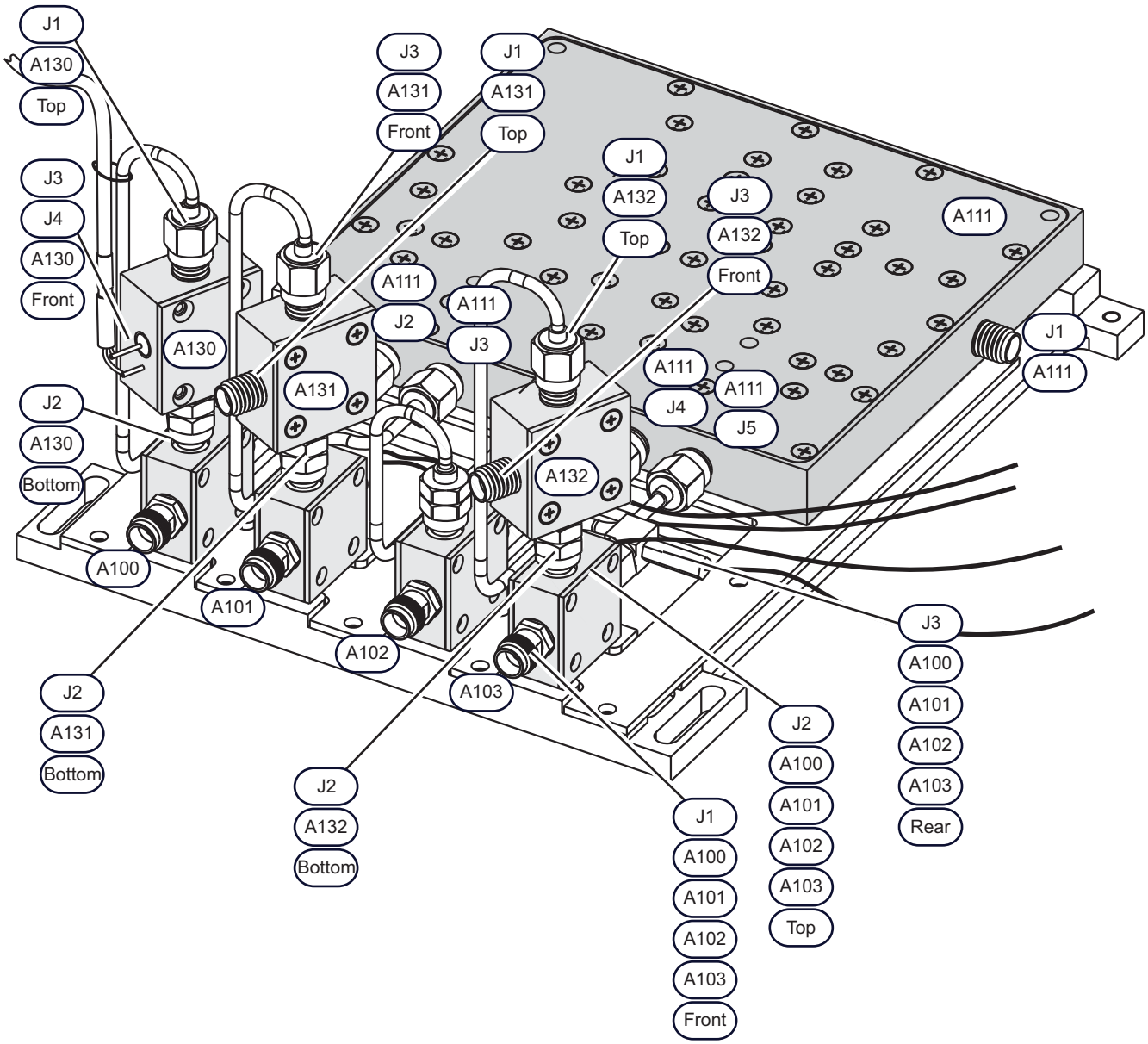

Figure 2-30. SLODM Assembly – 73231 A – Components – MS4647A with Option 080/081 (1 of 2)

SLODM Assembly – 73231 Revision A

For MS4647A VNAs equipped with Option 080/081 and S/N 1120219 and lower. The 73231 A SLODM assembly consists of the following eight (8) components:

- A111 LO Distribution Module – ND70081 – 62084
- A100 Sampler Module – ND70082 – 64180
- A101 Sampler Module – ND70082 – 64180
- A102 Sampler Module – ND70082 – 64180
- A103 Sampler Module – ND70082 – 64180
- A130 LO Coupler Module – ND70083 – 68848 – Mounts on top of the A100.
- A131 LO Coupler Module – No ND – 70685 – Mounts on top of the A101.
- A132 LO Coupler Module – No ND – 70685 – Mounts on top of the A103.

A100-A103 Sampler Module Connectors

- J1 – Front
- J2 – Top
- J3 – Rear
- -5V Pin – Bottom Rear
- +5v Pin – Bottom Front
- Each Sampler Module is held to the A111 with two (2) pan head Phillips M2.5 × 10 mm screws.

A130 LO Coupler Module Connectors

- J1 – Top
- J2 – Bottom
- J3 – Front facing pin above J4
- J4 – Front facing pin below J3

A131-A132 LO Coupler Module Connectors

- J1 – Top
- J2 – Bottom
- J3 – Front

A111 LO Distribution Module Assembly

- J1 – Right side towards rear
- J2 – Front facing left
- J3 – Front facing left center
- J4 – Front facing right center
- J5 – Front facing right
- Position 1 – 2-Pin Socket for A100 – At left
- Position 2 – 2-Pin Socket for A101 – At left center
- Position 3 – 2-Pin Socket for A102 – At right center
- Position 4 – 2-Pin Socket for A103 – At right

Figure 2-30. SLODM Assembly – 73231 A – Components – MS4647A with Option 080/081 (2 of 2)

SLODM Assembly – 62084 D – Components

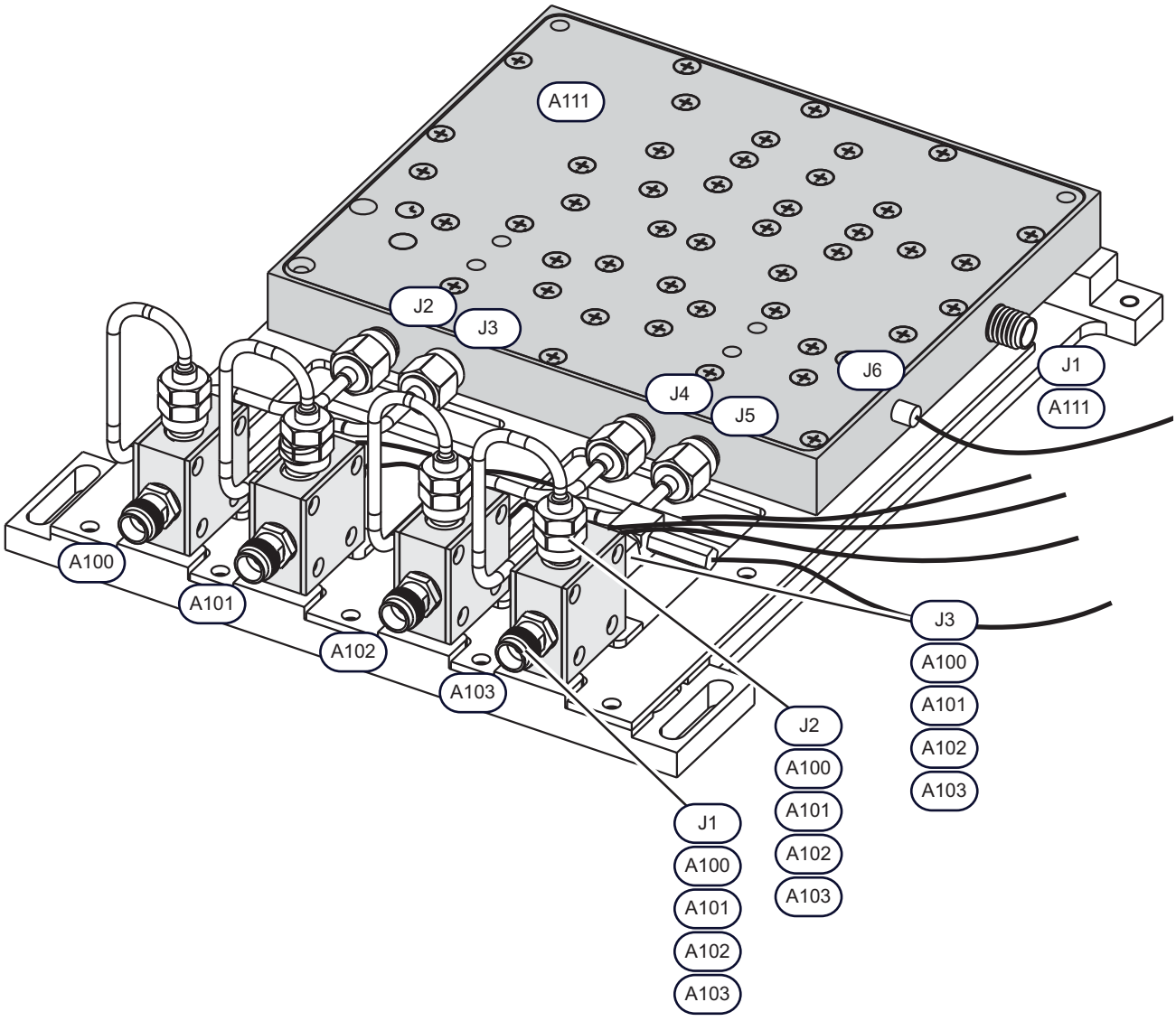

Figure 2-31. SLODM Assembly – 62084 D – Components (1 of 2)

SLODM Assembly – 62084 Revision D	A111 LO Distribution Module Assembly
For VNAs with S/N 1120220 and higher, the 62084 D SLODM assembly consists of the following five (5) components: • A111 LO Distribution Module – ND73193 – 72440 • A100 Sampler Module – ND70082 – 64180 • A101 Sampler Module – ND70082 – 64180 • A102 Sampler Module – ND70082 – 64180 • A103 Sampler Module – ND70082 – 64180 **A100-A103 Sampler Module Connectors** • J1 – Front • J2 – Top • J3 – Rear • -5V Pin – Bottom Rear • +5v Pin – Bottom Front • Each Sampler Module is held to the A111 with two (2) pan head Phillips M2.5 × 10 mm screws.	The following connectors are located on the A111 LO Distribution Module Assembly – ND73193 – 72440: • J1 – Right side towards rear • J2 – Front facing left • J3 – Front facing left center • J4 – Front facing right center • J5 – Front facing right • J6 – Right side towards front • Position 1 – 2-Pin Socket for A100 – At left • Position 2 – 2-Pin Socket for A101 – At left center • Position 3 – 2-Pin Socket for A102 – At right center • Position 4 – 2-Pin Socket for A103 – At right

Figure 2-31. SLODM Assembly – 62084 D – Components (2 of 2)

SLODM Assembly – 73231 B – Components

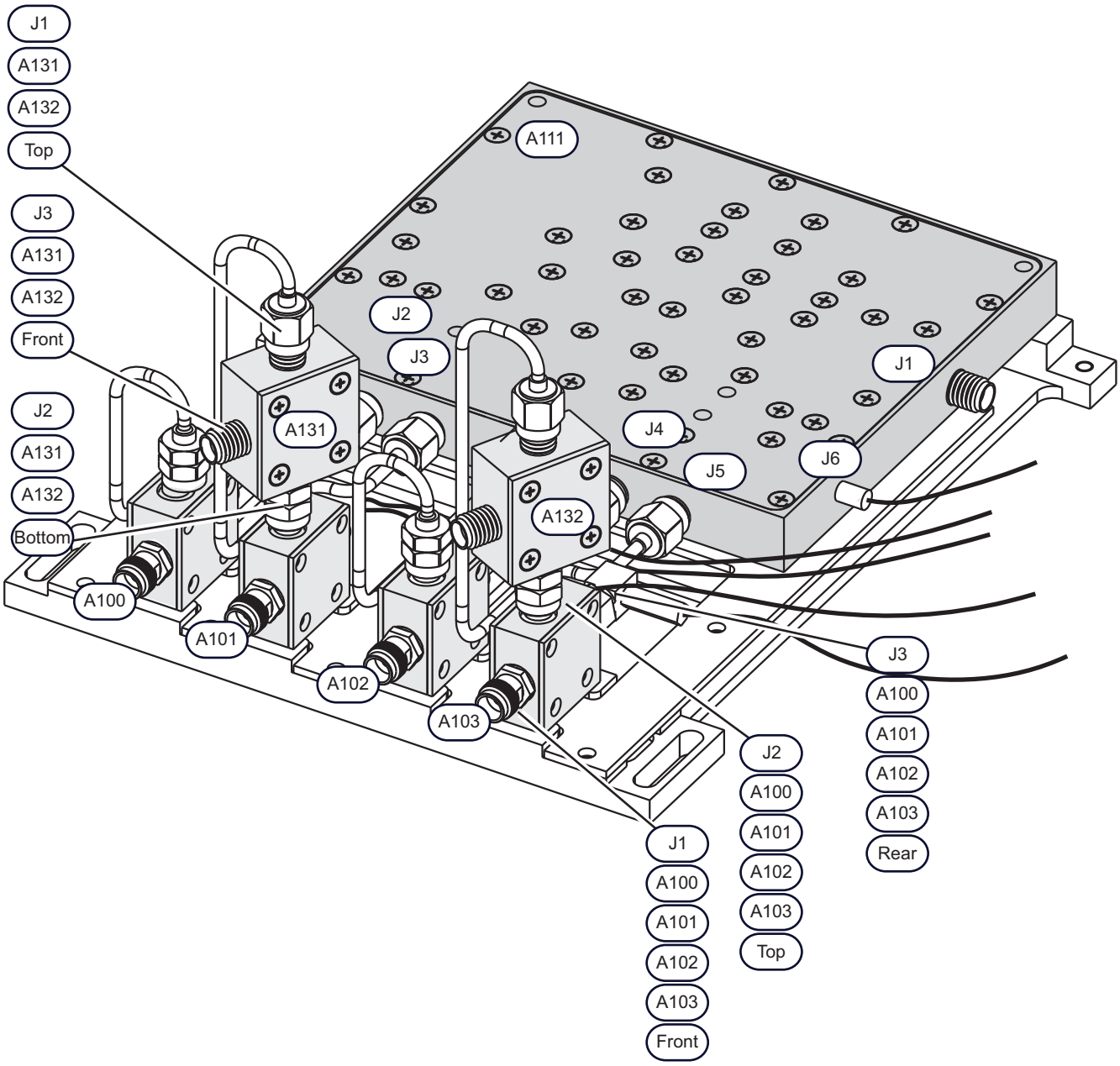

Figure 2-32. SLODM Assembly – 73231 B – Components – MS4647A with Option 080/081 (1 of 2)

SLODM Assembly – 73231 Revision B

For MS4647A VNAs equipped with Option 080/081 and S/N 1120220 and higher. The 73231 B SLODM assembly consists of the following eight (8) components:

- A111 LO Distribution Module – ND73193 – 72440
- A100 Sampler Module – ND70082 – 64180
- A101 Sampler Module – ND70082 – 64180
- A102 Sampler Module – ND70082 – 64180
- A103 Sampler Module – ND70082 – 64180
- A131 LO Coupler Module – No ND – 70685 – Mounts on top of the A101.
- A132 LO Coupler Module – No ND – 70685 – Mounts on top of the A103.

A100-A103 Sampler Module Connectors

- J1 – Front
- J2 – Top
- J3 – Rear
- -5V Pin – Bottom Rear
- +5v Pin – Bottom Front
- Each Sampler Module is held to the A111 with two (2) pan head Phillips M2.5 × 10 mm screws.

A131-A132 LO Coupler Module Connectors

- J1 – Top
- J2 – Bottom
- J3 – Front

A111 LO Distribution Module Assembly

- J1 – Right side towards rear
- J2 – Front facing left
- J3 – Front facing left center
- J4 – Front facing right center
- J5 – Front facing right
- J6 – Right side towards front
- Position 1 – 2-Pin Socket for A100 – At left
- Position 2 – 2-Pin Socket for A101 – At left center
- Position 3 – 2-Pin Socket for A102 – At right center
- Position 4 – 2-Pin Socket for A103 – At right

Figure 2-32. SLODM Assembly – 73231 B – Components – MS4647A with Option 080/081 (2 of 2)

2-23 Rear Panel

Rear Panel Assemblies

The following Rear Panel components can be removed without removing the Rear Panel:

- SATA Hard Disk Drive Assembly (HDD) – ND70071 – 62091
- Solid State Drive Assembly (SSD) – ND73934 – 67861
- Rear Panel Loops – No ND – 62112-1

The Rear Panel is not a replaceable part but its removal provides access to two of its mounted components:

- A17 Rear Panel PCB Assembly – ND70067 – 62086
- Rear Panel Analog Section Fan Assembly – ND70074 – 62095-2

Partial or full removal of the Rear Panel also provides access for the following internal components:

- Motherboard 1 PCB Assembly – ND70069 – 61920-3
- Motherboard 2 PCB Assembly
    - Phase 1 Motherboard 2 PCB Assembly – ND70070 – 61923-3
    - Phase 2 Motherboard 2 PCB Assembly – ND73878 – 3-72813-3
- Power Supply Module and related cables and harnesses
    - Phase 1 Power Supply Module and Harnesses – ND70072 – 62088
    - Phase 2 Power Supply Module and Harnesses – ND73933 – 71995
- Digital PCB Fan Assembly, 165 mm Cable Attached – ND70073 – 62095-1

Rear Panel Overview

The Rear Panel and its related components are shown below in Figure 2-33, “Rear Panel Assembly - In Chassis Covers Off” on page 2-70.

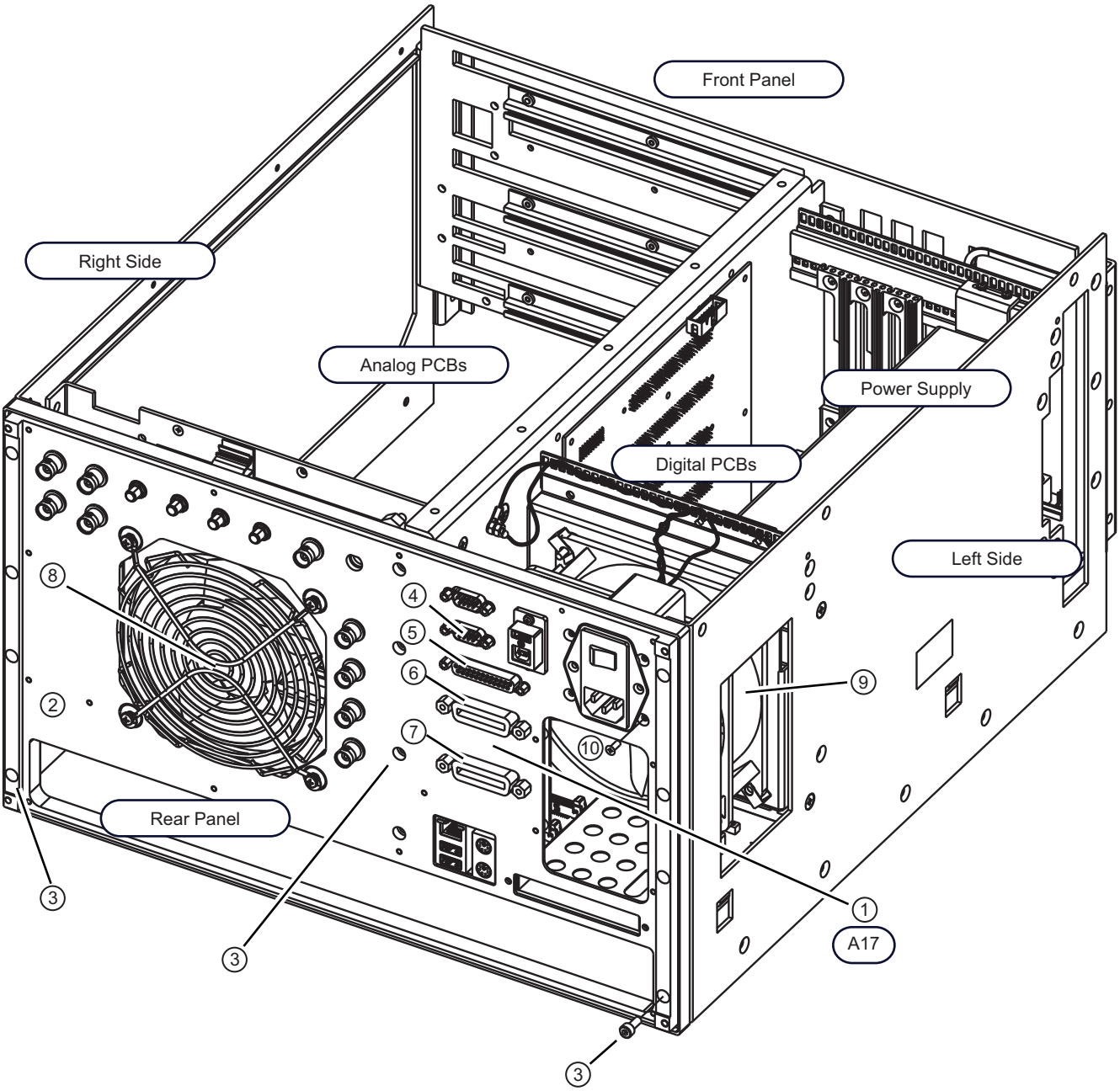

Figure 2-33. Rear Panel Assembly - In Chassis Covers Off (1 of 2)

Orientation

The instrument chassis viewed from the Rear Panel with the covers off.

Rear Panel

1. A17 Rear Panel PCB located here on inside of Rear Panel.
2. Rear Panel Silk-Screened Sub Plate removed. – The sub plate is fastened in place using 14 pan head Phillips M3 × 6 mm screws and it can be removed with the covers on or off.
3. Rear Panel Fastening Screws – The rear panel is held to the instrument chassis using 12 socket head Allen M4 × 20 mm screws. There are three rows of four screws each at the left, center, and right.

A17 Rear Panel PCB Assembly Connectors

4. Serial Connector port with two (2) 4×40 × 0.187 M-F connector mounting studs.
5. External I/O Control port with two (2) 4×40 × 0.187 M-F connector mounting studs. – The connector mounting studs here and above thread to standard DB connectors. The studs must be removed to service the A17 PCB.
6. IEEE 488.2 GPIB port with two (2) 4×40 × 0.650 connector mounting studs.
7. Dedicated GPIB port with two (2) 4×40 × 0.650 connector mounting studs. – The GPIB connector mounting studs thread into standard stack able GPIB Test Cable Connectors.

Fan Assemblies

8. Rear Panel Analog Section Fan Assembly. The Rear Panel must be removed to service the fan.
9. Digital PCB Fan Assembly. The Rear Panel and instrument chassis plates must be removed to service the fan.

Figure 2-33. Rear Panel Assembly - In Chassis Covers Off (2 of 2)

A17 Rear Panel PCB Assembly

The connections to the A17 Rear Panel PCB Assembly are shown in Figure 2-34 below. The left chassis side plate has been removed for clarity.

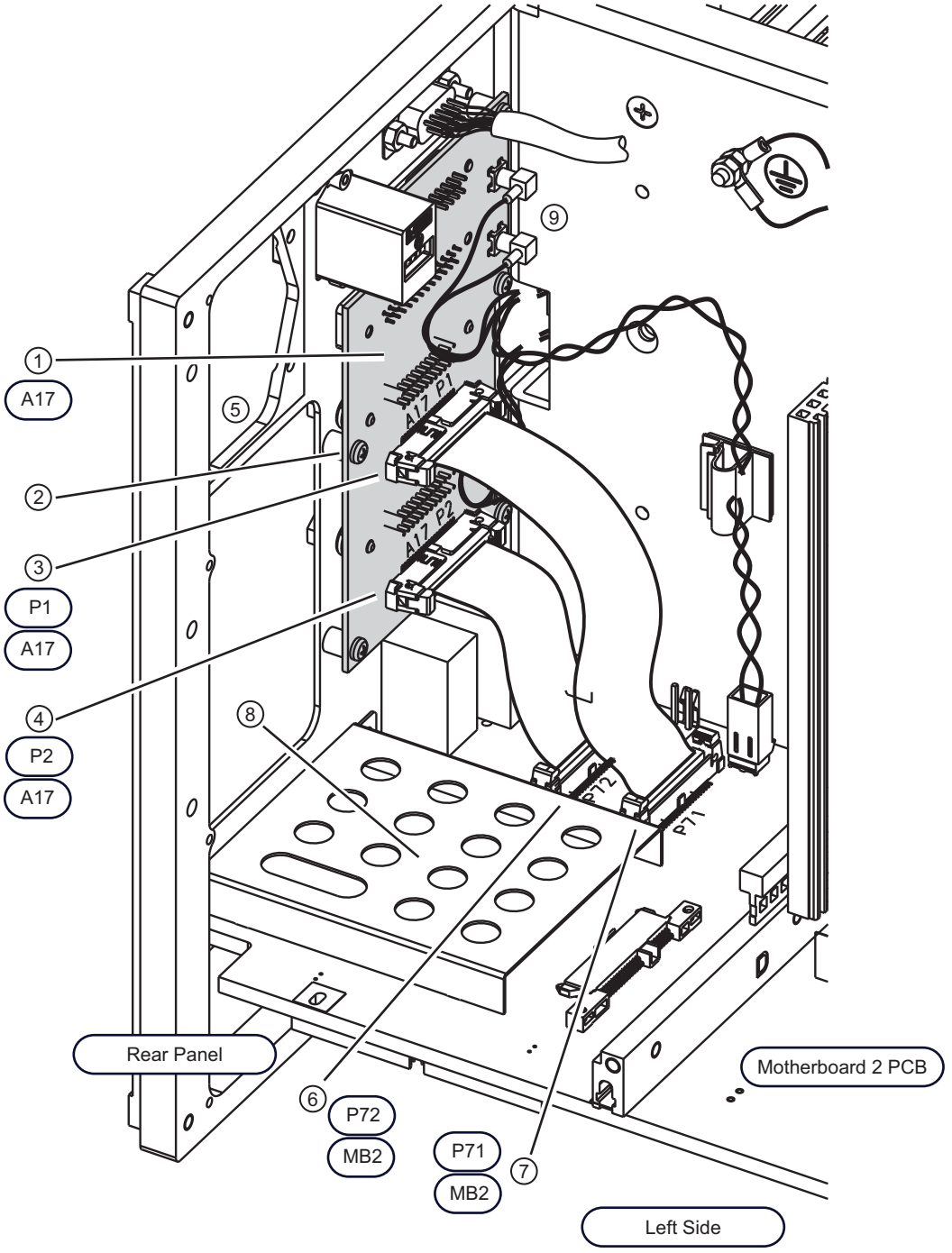

Figure 2-34. Rear Panel - A17 Rear Panel PCB Assembly – ND70067 – 62086 (1 of 2)

Orientation

The instrument is viewed from the left side with the side plate removed for clarity. The rear panel is to the left.

A17 PCB

1. A17 Rear Panel PCB – ND70067 – 61924-3
   - Provides support for the Serial I/O, External I/O, IEEE 488.2 GPIB, and Dedicated GPIB rear panel ports.
   - The Serial I/O and External I/O connectors are fastened to the Rear Panel Plate.
   - Each I/O connector uses two (2) 4×40 × 0.187 hex M-F threaded connector mounting studs.
   - The IEEE 488.2 GPIB Port and the Dedicated GPIB Port are also fastened to the Rear Panel Plate.
   - Each GPIB connector uses two (2) 4×40 × 0.650 M-F connector mounting studs supporting stackable GPIB Test Cable Connectors.
   - The eight (8) connector mounting studs must be removed to service the A17 PCB.
2. Five (5) pan head Phillips M3 × 6 mm mounting screws holding the A17 PCB to swagged-in standoffs on the Rear Panel Plate.

A17 PCB Cable Connections

3. A17 PCB P1 connector – For ribbon cable to MB2 PCB connector P71.
4. A17 PCB P2 connector – For ribbon cable to MB2 PCB connector P72.
5. Chassis opening for the AC Power Module and Switch (not shown here for clarity).
6. MB2 PCB P72 ribbon cable connector.
7. MB2 PCB P71 ribbon cable connector.
8. Enclosure and connector for the SATA Solid State Drive or obsolete Hard Disk Drive (not shown here for clarity).
9. A17 PCB MCX coaxial connectors P8, P9, P10, and P11 – Connect to the Rear Panel BNC trigger ports.

Figure 2-34. Rear Panel - A17 Rear Panel PCB Assembly – ND70067 – 62086 (2 of 2)

Rear Panel Inside Components

The figure below shows the internal components attached to the Rear Panel.

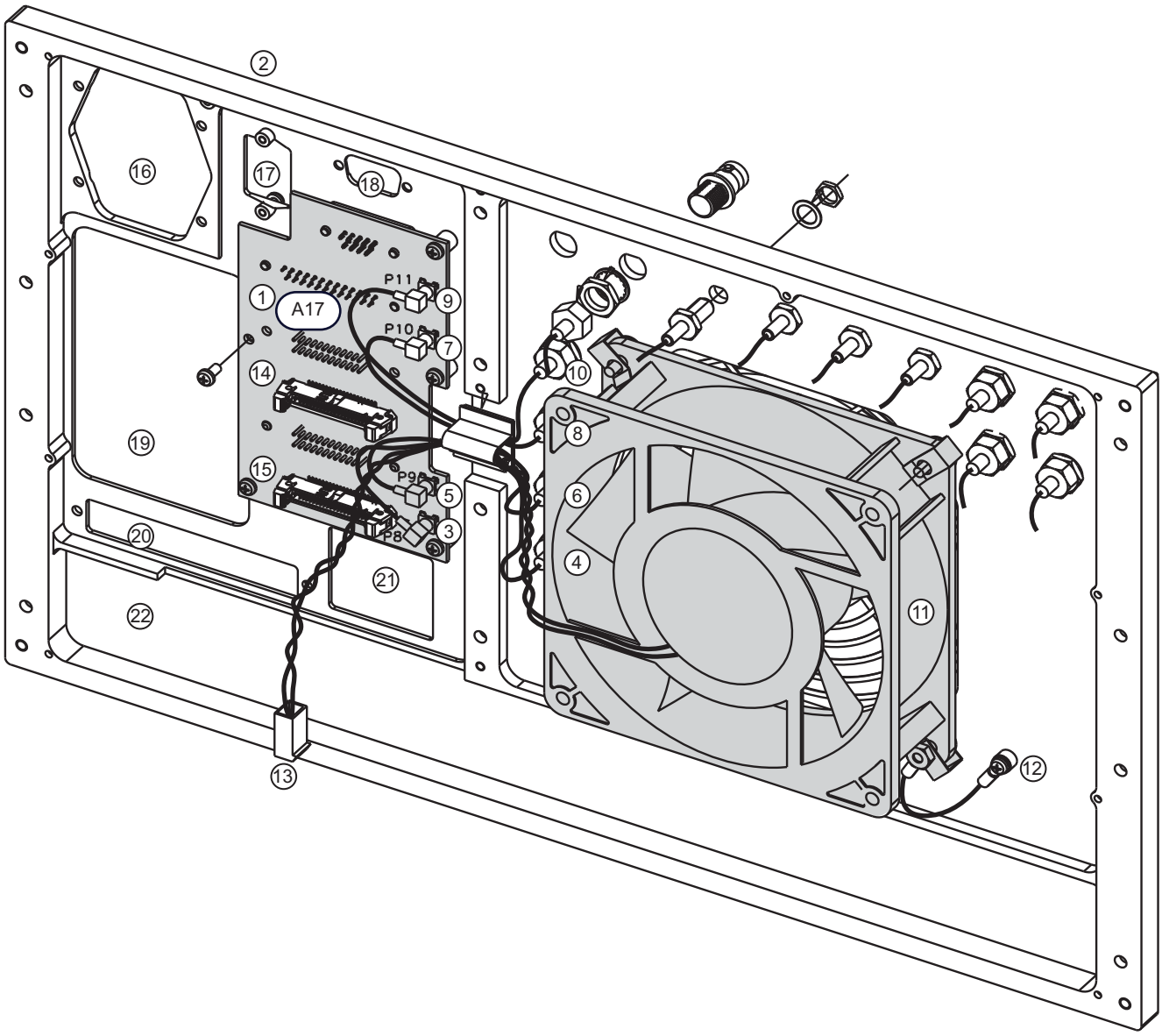

Figure 2-35. Rear Panel – Inside Connections and Assemblies (1 of 2)

A17 PCB

1. A17 Rear Panel PCB Assembly – ND70067 – 61924-3
2. Rear Panel Chassis Plate

A17 PCB Cables

The A17 PCB MCX cables connect to the four trigger control BNC ports on the Rear Panel. The two ribbon cables connect to the MB2 PCB.

Trigger Out

3. A17 PCB P8 MCX Connector – Connects to the Trigger Out BNC
4. Trigger Out BNC Connector (partially hidden by fan)

Ready for Trigger

5. A17 PCB P9 MCX Connector – Connects to the Ready for Trigger BNC
6. Trigger BNC Connector (partially hidden by fan)

Lock Status

7. A17 PCB P10 MCX Connector – Connects to the Lock Status BNC
8. Lock Status BNC Connector (partially hidden by fan)

External Trigger

9. A17 PCB P11 MCX Connector – Connects to then External Trigger BNC
10. External Trigger BNC Connector

Rear Panel Fan

11. Rear Panel Fan Assembly – ND70074 – 62095-2
12. Rear Panel Fan Ground Connection to Rear Panel
13. Fan Power Connection – Twisted-pair cable and 2-pin header connects to MB2 PCB connector P95.

Ribbon Cables

14. A17 PCB connector P1 – Ribbon cable connects to MB2 PCB connector P71.
15. A17 PCB connector P2 – Ribbon cable connects to MB2 PCB connector P72.

Chassis Openings

16. Opening for AC Power Module (not shown)
17. Opening for USB A connector (not shown)
18. Opening for XGA/VGA connector (not shown)
19. Opening for fan cooling
20. Opening for the SATA Solid State Drive or obsolete Hard Disk Drive (not shown for clarity)
21. Opening for USB and PS/2 connectors (not shown)
22. Opening for RF Deck Rear Panel (not shown)

Figure 2-35. Rear Panel – Inside Connections and Assemblies (2 of 2)

2-24 Power Supply Modules

Phase 1 – Power Supply Module and Cable Harness – ND70072 – 62088

The Phase 1 Power Supply Module Assembly and its three major cable harnesses is shown below in Figure 2-36 mounted in the Digital PCB Section. The cable harnesses go to connectors on the Phase 1 Motherboard 2 PCB Assembly – ND70070 – 61923-3.

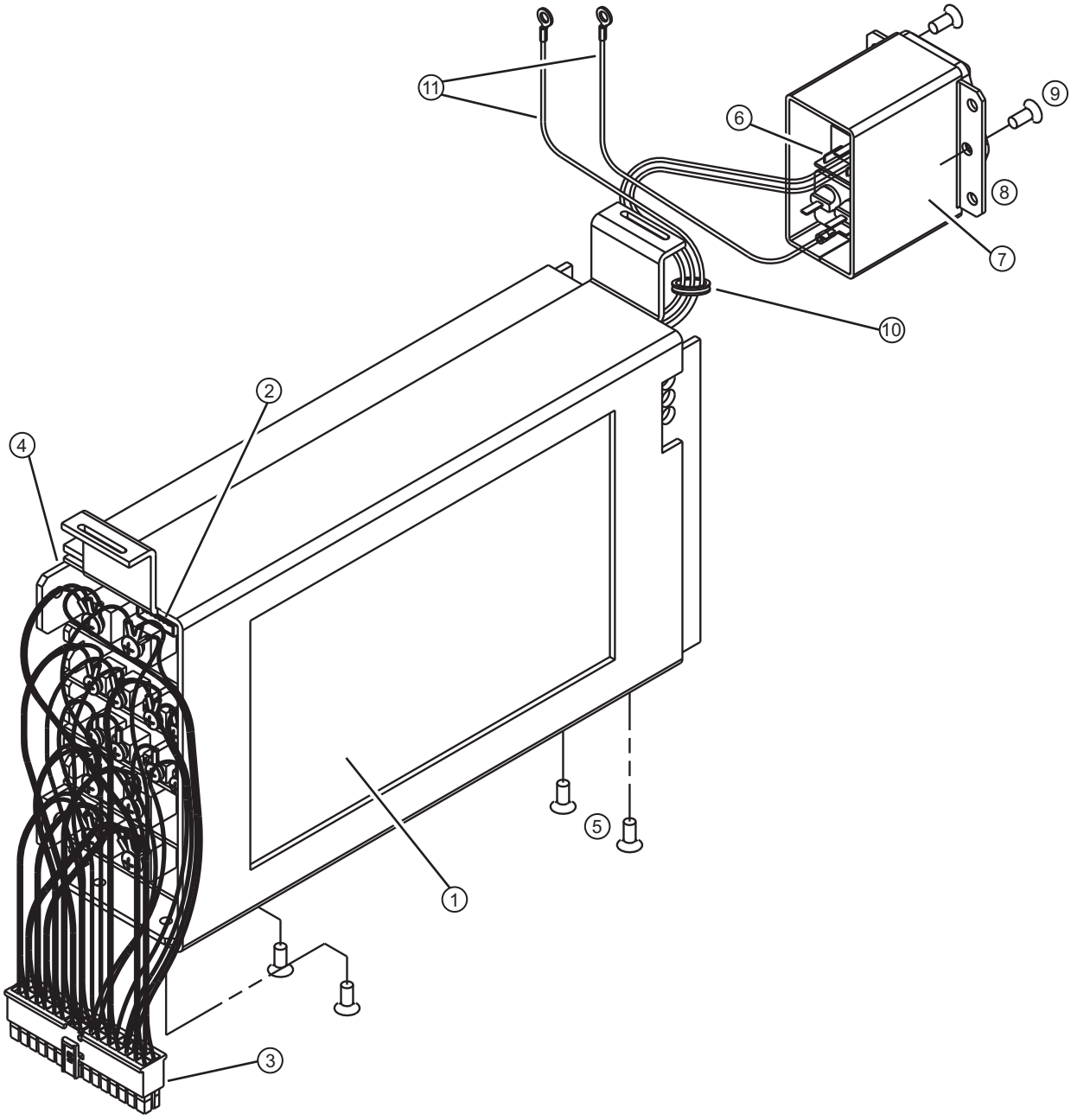

Figure 2-36. Phase 1 Power Supply Assembly – ND70072 – 62088 (1 of 2)

1. Power Supply Mounting Chassis
2. AC Input Module
3. Power Supply Cable Assembly – 3-70258 – Primary power wiring harness to Phase 1 Motherboard 2 PCB Assembly connector **P94 Pwr In**.
4. Power control wiring harness (not shown here) to Phase 1 MB2 PCB connector **P93 Pwr Ctrl**.
5. Power Supply Module – ND70072 – 62088 – 3-40-173 – Includes the Power Supply Cable Assembly above.
6. AC Module Mounting Bracket
7. Four (4) flat head Phillips M3 × 8 mm screws holding the Power Supply Module into its mounting bracket.
8. Two (2) flat head Phillips M4 × 8 mm screws (in the center) holding the AC Input Module into the Rear Panel. The four screws in the corners of the AC Input Module hold the module into its mounting bracket and do not need to be removed.
9. Grommet holding harness wires.
10. Green Wire with Yellow Strip – Terminated in ring lugs for connection to chassis ground post.

Figure 2-36. Phase 1 Power Supply Assembly – ND70072 – 62088 (2 of 2)

Phase 2 – Power Supply Module and Cable Harnesses – ND73933 – 71995

The Phase 2 Power Supply Module Assembly and its four major cable harnesses is shown below in Figure 2-37 mounted in the Digital PCB Section. The cable harnesses go to connectors on the Phase 2 Motherboard 2 PCB Assembly – ND73878 – 3-72813-3. The replacement part includes Power Supply Cable Assembly – 3-71996 and 3.3 Volt Sense Cable Assembly – 3-67873. It is compatible with all Phase 2 instrument models with any combination of options.

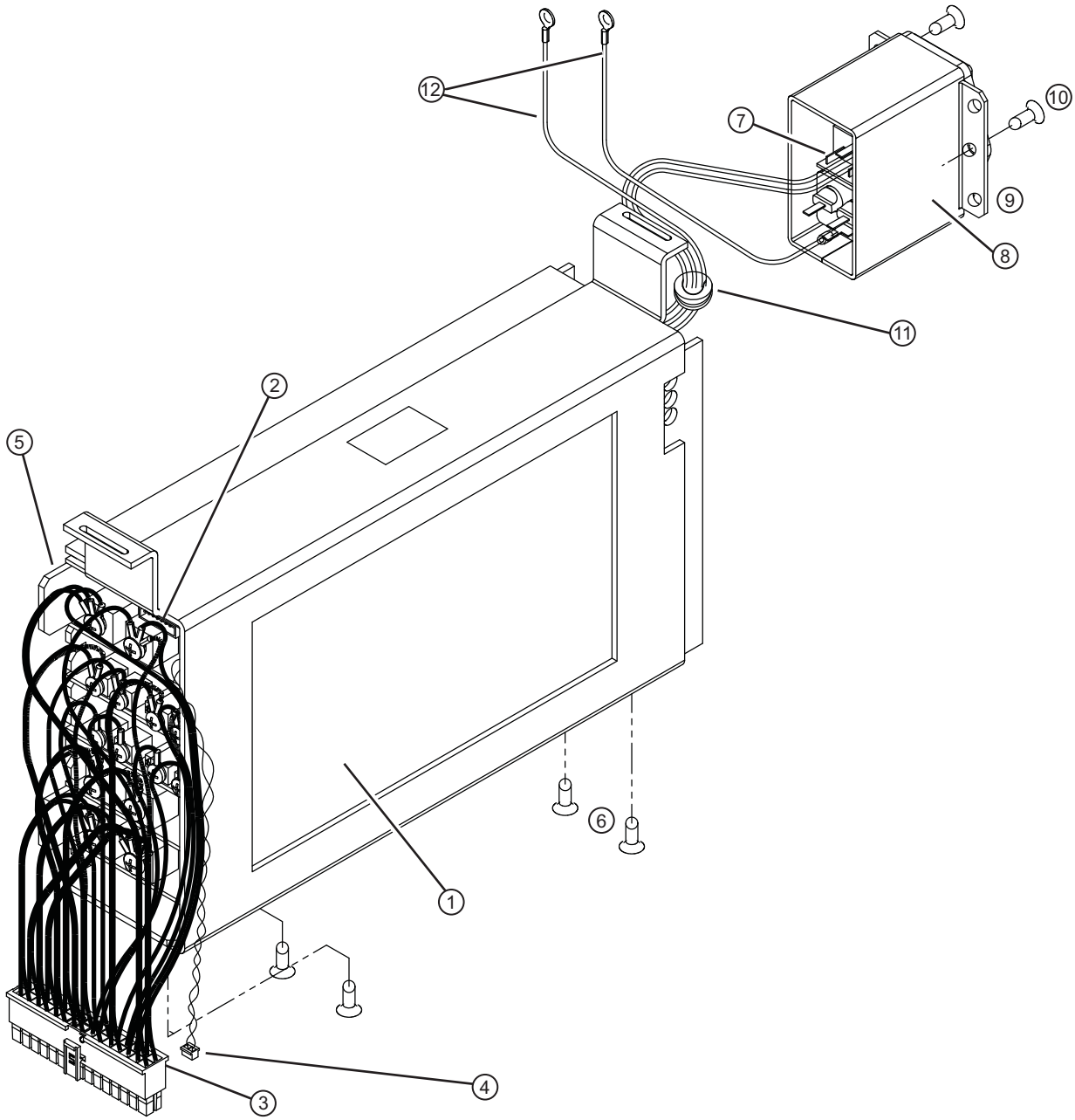

Figure 2-37. Phase 2 – Power Supply Module and Harnesses – ND73933 – 71955 (1 of 2)

1. Power Supply Mounting Chassis
2. AC Input Module
3. Power Supply Cable Assembly – 3-71996 – Primary power wiring harness to Phase 2 MB2 PCB Assembly connector **P94 Pwr In**.
4. Power Control Wiring Harness (not shown here) to Phase 2 MB2 PCB connector **P93 Pwr Ctrl**.
   • The Power Control Wiring Harness is not a replacement part.
5. Power Supply Module – ND73933 – 71955 – 3-40-173 – Includes the Power Supply Cable Assembly – 3-71996 (above) and the 3.3 Volt Sense Cable – 3-67873 (at right).
6. AC Module Mounting Bracket
7. Four (4) flat head Phillips M3 × 8 mm screws holding the Power Supply Module into its mounting bracket.
8. Two (2) flat head Phillips M4 × 8 mm screws (in the center) holding the AC Input Module into the Rear Panel. The four screws in the corners of the AC Input Module hold the module into its mounting bracket and do not need to be removed.
9. Grommet holding harness wires.
10. Green Wire with Yellow Strip – Terminated in ring lugs for connection to chassis ground post.
11. 3.3 Volt Sense Cable – 3-67873 – Connects between the Power Supply 3.3 Volt module at the top of the power supply and the Phase 2 MB2 PCB Assembly connector **P62 +3.3VD Sense.**

Figure 2-37. Phase 2 – Power Supply Module and Harnesses – ND73933 – 71955 (2 of 2)

2-25 Phase 1 and Phase 2 Motherboard PCB Assemblies

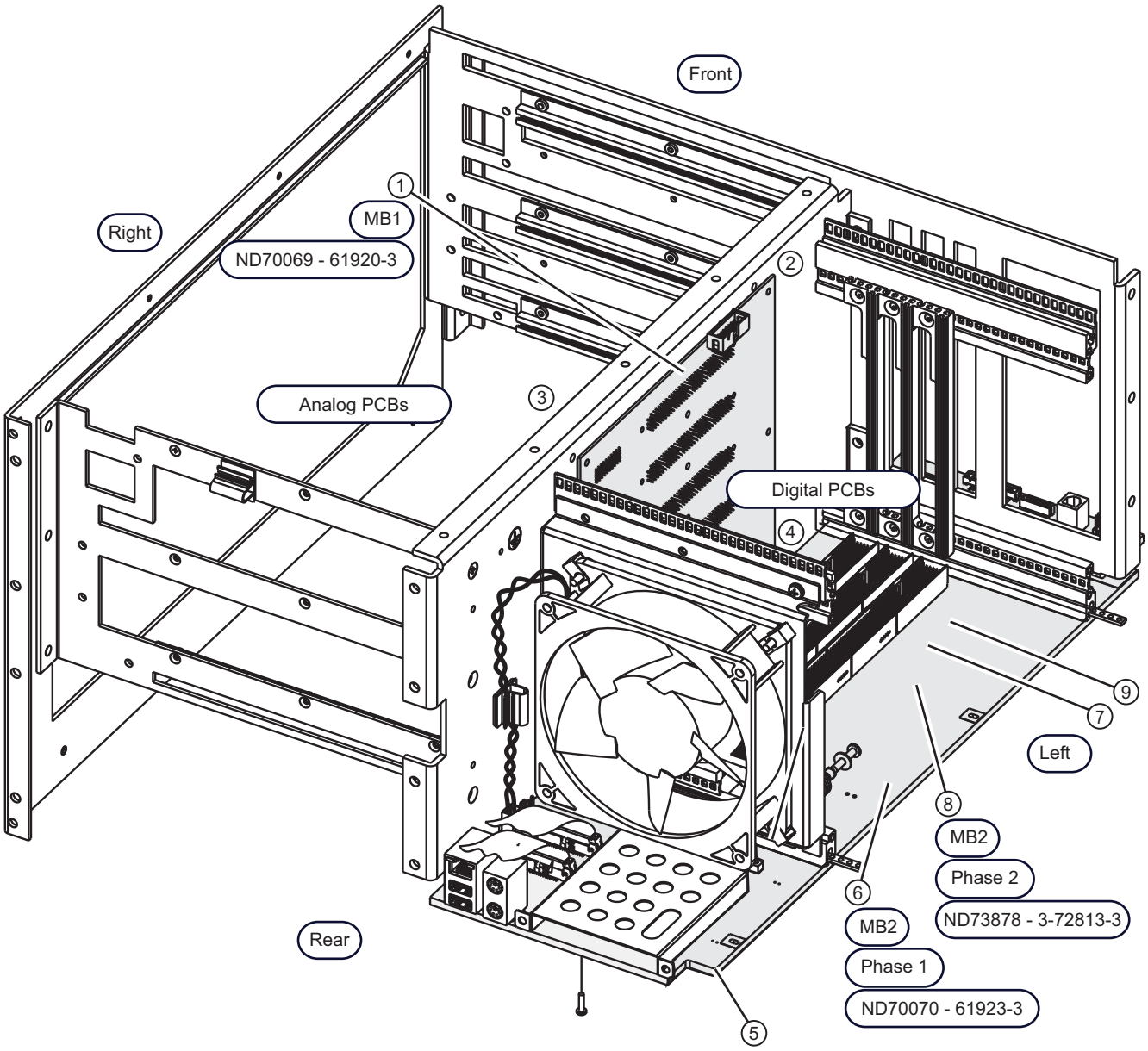

Figure 2-38. Motherboard 1 (MB1) PCB Assembly – Phase 1 / Phase 2 MB2 PCBs (1 of 2)

Orientation

Viewing the instrument chassis from the Rear Panel.

Removals

The Left Side Chassis Plate, the Rear Panel Plate, the Front Panel Assembly, the RF Deck, the Digital PCBs, and the Analog PCBs have been removed for clarity.

MB1 PCB

1. MB1 – Motherboard 1 PCB Assembly – ND70069 – 61920-3
2. Mounted vertically and fastened in Digital PCB Bay to the Chassis Center Plate.
3. The MB1 PCB backplane connectors protrude through plate openings into the Analog PCB Bay for (from top to bottom) the A11 IF Band Module, A13 Source Module, and A15 Low Band Receiver Module.
4. The MB1 PCB connects via a backplane connector into the MB2 PCB. The MB1 PCB can only be removed after the MB2 PCB has been removed.

Phase 1 MB2 PCB

5. Mounted horizontally below the Digital PCB Bay and just above the RF Deck chassis.
6. MB2 – Phase 1 Motherboard 2 PCB Assembly – ND70070 – 61923-3
7. The Phase 1 MB2 backplane connectors viewed from rear, from left to right are:
   - MB1 PCB
   - A10 DSP Module PCB
   - A6 cPCI-PMC PCB with A7 Graphics and A8 GPIB PCBs
   - A3 Single Board Computer PCB with A4 USB PCB

Phase 2 MB2 PCB

8. MB2 – Phase 2 Motherboard 2 PCB – ND73878 – 3-72813-3
9. The Phase 2 MB2 backplane connectors viewed from rear, from left to right are:
   - MB1 PCB
   - A10 DSP Module PCB
   - CB PCB with SBC, SODIMM on SBC, GPIB, USB, and GPU PCBs

Figure 2-38. Motherboard 1 (MB1) PCB Assembly – Phase 1 / Phase 2 MB2 PCBs (2 of 2)

2-26 Phase 1 – MB2 PCB Assembly – ND70070 – 61923-3

The Phase 1 MB2 is only compatible with the Phase 1 digital section PCBs and power supply module listed below.

- A3 Single Board Computer PCB Assembly – ND70061 – 3-2000-1525/3-59632
- A6 cPCI to PMC Adapter Card PCB Assembly – ND70063 – 3-2000-1485
- A7 Graphic Adapter Card PCB – ND70065 – Mounted on the A6 PCB
- Phase 1 Power Supply Module and Harness – ND70072 – 62088 – with 3-72058 Cable Harness

Note	The following PCBs are compatible with Phase 1 and Phase 2 VNAs: • A3 USB Controller PCB Assembly – ND70062 – 65412-4 • A8 GPIB Module PCB Assembly – ND70065 – 65413-3 • A10 Digital Signal Processing Module PCB Assembly – ND70066 – 61933-3

In Figure 2-39 below, the MB2 connector locations are shown. In Figure 2-40 on page 2-85, a detailed view of the MB2 front connectors is shown.

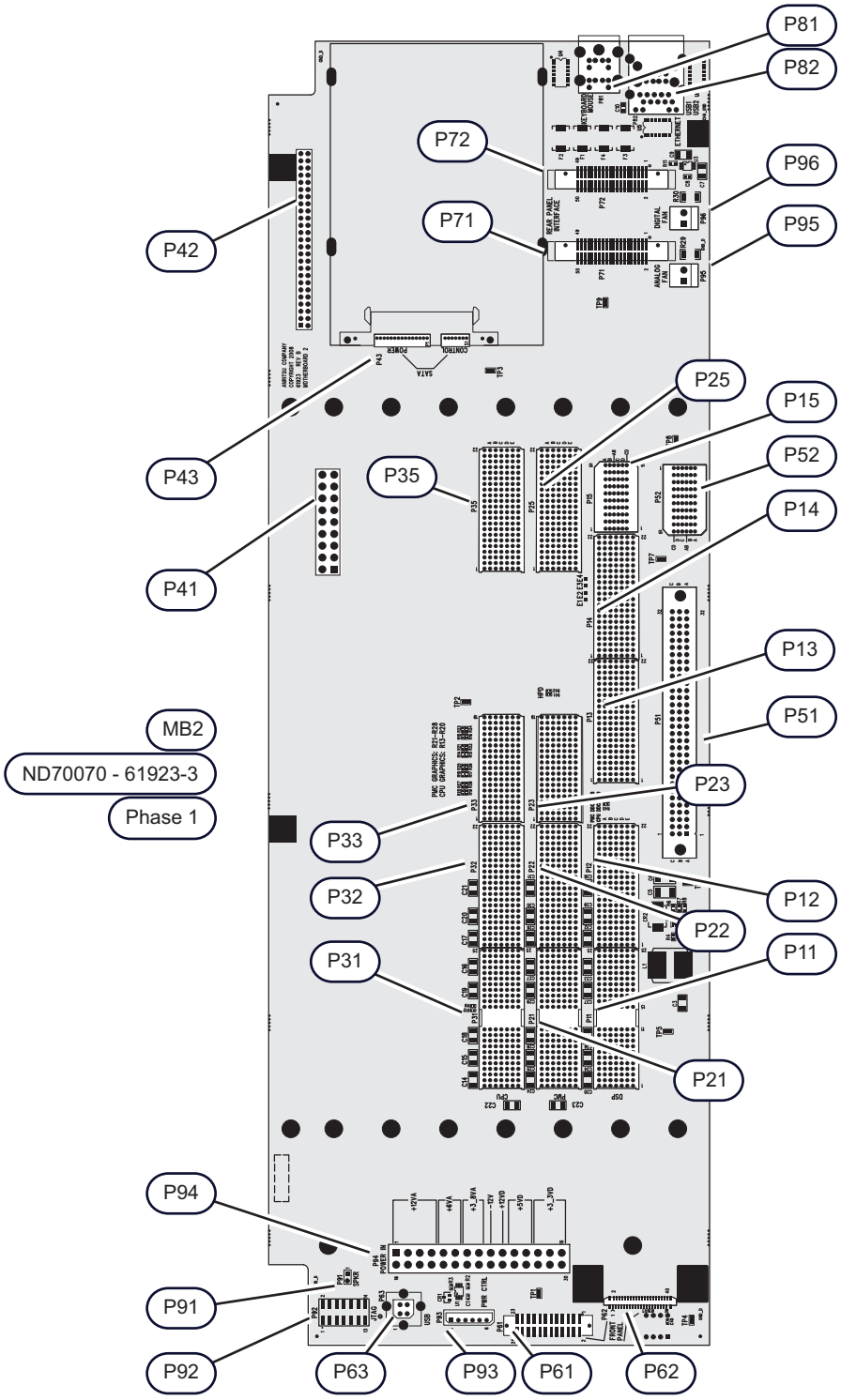

Figure 2-39. Phase 1 Motherboard 2 PCB Assembly – ND70070 – 61923-3 – Connectors (1 of 2)

Power Supply Connectors	**A3 Single Board Computer PCB Edge Connectors**
P62 – +3.3 VDC Sense Cable	P31
P93 – Power Control Cable	P32
P94 – Main Cable Harness from Power Supply	P33
Front Panel Connectors	P35
P61 – Power/Signal Ribbon Cable	**A6 Adapter Card PCB Edge Connectors**
P62 – Flexible Gold Signal Ribbon Cable	P21
MB2 Front Connectors	P22
P54 – Debug Power – Not used	P23
P63 – USB Cable	P25
P91 – Speaker – Not used	**A10 Digital Signal Processing PCB Edge Connectors**
MB2 Rear Connectors	P11
P43 – Solid State Drive/SATA Hard Disk Drive Control and Signal Connector	P12
	P13
P71 – Rear Panel Interface Connector	P14
P72 – Rear Panel Interface Connector	P15
P95 – Analog Section Fan Power	**Motherboard 1 PCB Edge Connectors**
P81 – PS/2 Keyboard and Mouse Connector Stack	P51
P82 – RJ45 Ethernet and USB Connector Stack	P52
P96 – Digital Section Rear Panel Fan Power	**Reverse Side Connectors**
	P41 – RF Power In
	P42 – RF Control In

Figure 2-39. Phase 1 Motherboard 2 PCB Assembly – ND70070 – 61923-3 – Connectors (2 of 2)

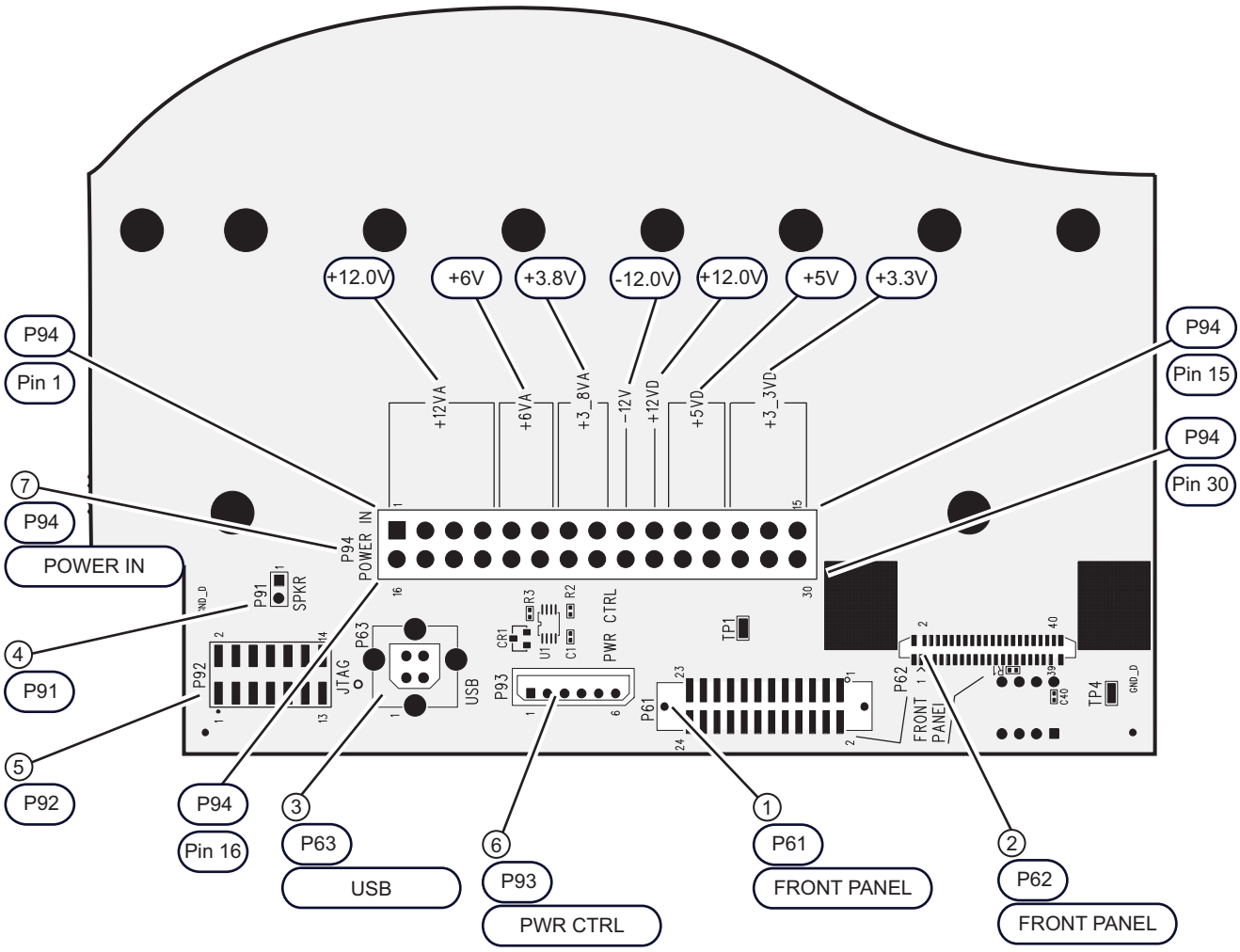

1. P61 – Ribbon Cable Connector to Front Panel	P94 – Connector Pin 1
2. P62 – Ribbon Cable Connector to Front Panel	P94 – Connector Pin 15
3. P63 – USB Type A Connector	P94 – Connector Pin 16
4. P91 – Speaker – Not used	P94 – Connector Pin 30
5. P92 – JTAG – Not used	
6. P93 – Power Control Connector to Power Supply	
7. P94 – Power In Connector to Power Supply	

Figure 2-40. Phase 1 Motherboard 2 PCB Assembly – ND70070 – 61923-3 – Front

2-27 Phase 2 – MB2 PCB Assembly – ND73878 – 3-72813-3

The Phase 2 MB2 is only compatible with the Phase 2 digital section PCBs and power supply module listed below.

- CB PCB – Carrier Board PCB Assembly – ND73874 – 3-72444-3
- SBC PCB – Single Board Computer PCB Assembly – ND73875 – 3-2000-1668 – Mounted on the CB PCB.
- SODIMM – Small-Outline Dual Inline Memory Module – No ND – 3-2000-1671 – Mounted on the SBC PCB, two (2) per instrument.
- GPU PCB – Graphics Processor Unit ATI E4690 MXM – ND73876 – 3-2000-1661 – Mounted on the back of the CB PCB.
- Phase 2 Power Supply Module and Harness – ND73933 – 71995 – with 3-71996 Cable Harness and 3-67873 3.3 VDC Power Sense Cable

Note

The following PCBs are compatible with Phase 1 and Phase 2 VNAs:

- A3 USB Controller PCB Assembly – ND70062 – 65412-4
- A8 GPIB Module PCB Assembly – ND70065 – 65413-3
- A10 Digital Signal Processing Module PCB Assembly – ND70066 – 61933-3

In Figure 2-41 below, the MB2 connector locations are shown. In Figure 2-18 on page 2-43, a detailed view of the MB2 front connectors is shown.

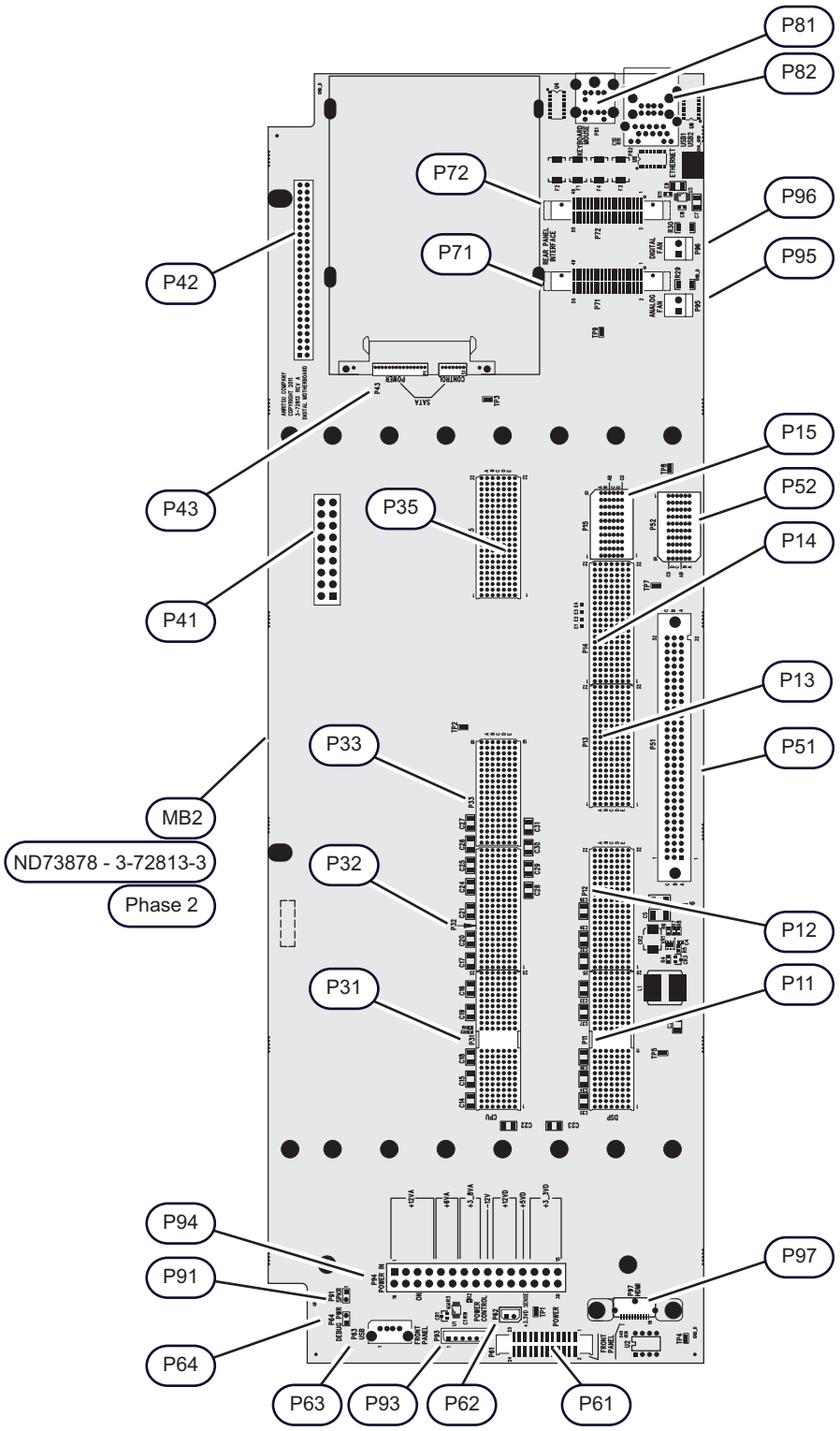

Figure 2-41. Phase 2 Motherboard 2 PCB Assembly – ND73878 – 3-72813-3 – Connectors (1 of 2)

Power Supply Connectors	**Carrier Board PCB Edge Connectors**
P94 – Main Cable Harness from Power Supply	P31
P93 – Power Control Cable	P32
P62 – +3.3 VDC Sense Cable	P33
Front Panel Connectors	P35
P61 – Power/Signal Ribbon Cable	**A10 Digital Signal Processing PCB Edge Connectors**
P63 – USB Cable	P11
P97 – HDMI Cable	P12
MB2 Front Connectors	P13
P54 – Debug Power – Not used	P14
P91 – Speaker – Not used	P15
MB2 Rear Connectors	**Motherboard 1 PCB Edge Connectors**
P43 – Solid State Drive/SATA Hard Disk Drive Control and Signal Connector	P51
	P52
P71 – Rear Panel Interface Connector	**Reverse Side Connectors**
P72 – Rear Panel Interface Connector	P41 – RF Power In
P95 – Analog Section Fan Power	P42 – RF Control In
P81 – PS/2 Keyboard and Mouse Connector Stack	
P82 – RJ45 Ethernet and USB Connector Stack	
P96 – Digital Section Rear Panel Fan Power	

Figure 2-41. Phase 2 Motherboard 2 PCB Assembly – ND73878 – 3-72813-3 – Connectors (2 of 2)

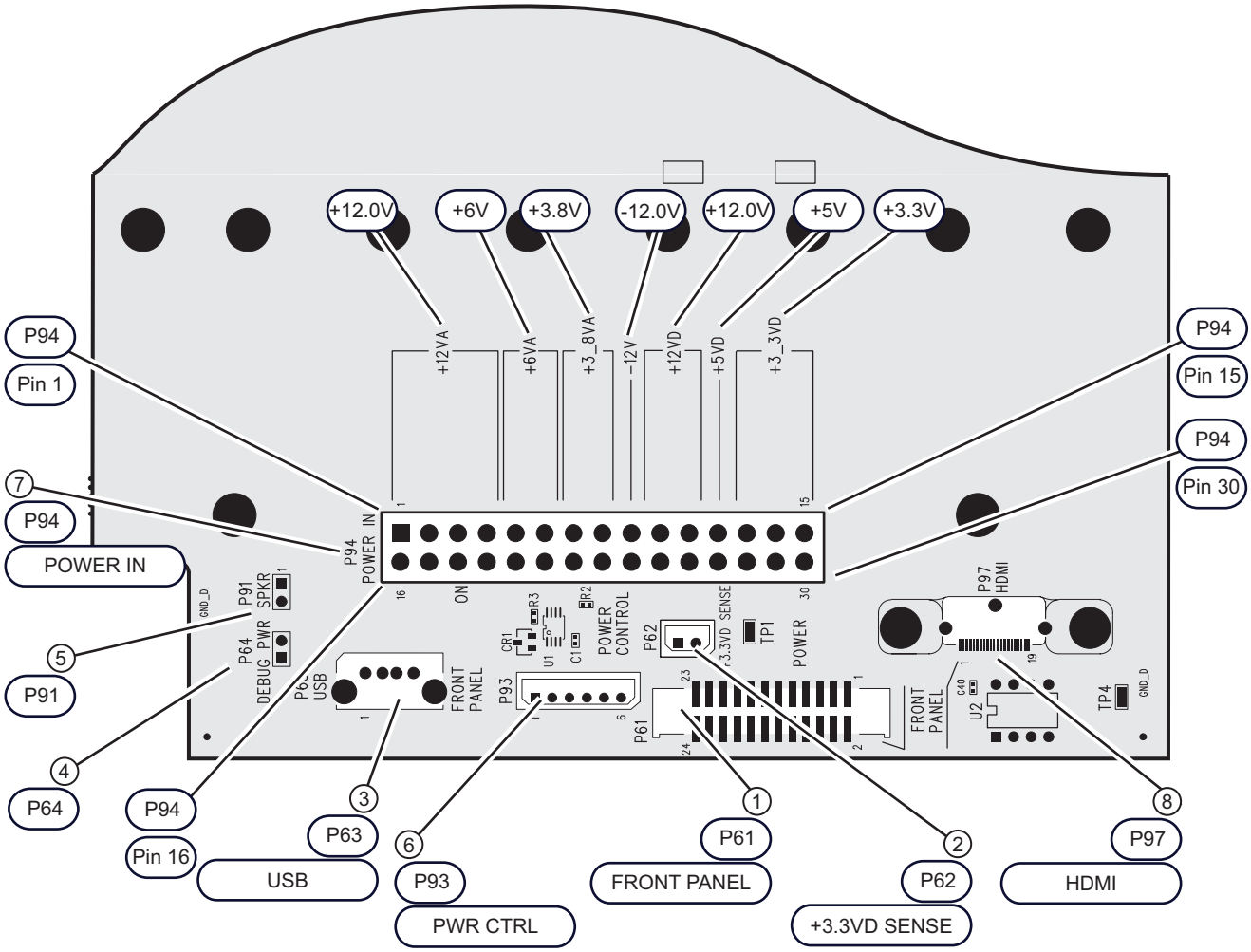

1. P61 – Ribbon Cable Connector to Front Panel	P94 – Connector Pin 1
2. P62 – +3.3 VDC Sense Connector to Power Supply Module	P94 – Connector Pin 15
3. P63 – USB Type A Connector to Front Panel	P94 – Connector Pin 16
4. P64 – Debug Power – Not used	P94 – Connector Pin 30
5. P91 – Speaker – Not used	
6. P93 – Power Control Connector to Power Supply	
7. P94 – Power In Connector to Power Supply	
8. P97 – HDMI Connector to Front Panel	

Figure 2-42. Phase 2 Motherboard 2 PCB Assembly – ND73878 – 3-72813-3 – Front

Motherboard 1 PCB Assembly – ND70069 – 61920-3

Functionally, the Motherboard 1 PCB Assembly (MB1 PCB) provides signal routing and DC power distribution paths for the Analog Section PCB assemblies:

- A11 IF Band Module – ND70076 – 62080 – Top
- A13 Source Module – Middle
    - ND70077 – 62082 or
    - ND73202 – 62082-1
    - Both parts are identical
- A15 Low Band Receiver Module – ND70075 – 62079 – Bottom

Mechanically, the Motherboard 1 PCB Assembly is mounted vertically on the chassis center plate in the Digital PCB Bay where its backplane connectors protrude through the chassis center plate into the Analog PCB Bay. The MB1 PCB edge connectors mate with backplane connectors on the horizontally-mounted Motherboard 2 (MB2) PCB Assembly located below the PCB Bays and above the RF Deck assembly.

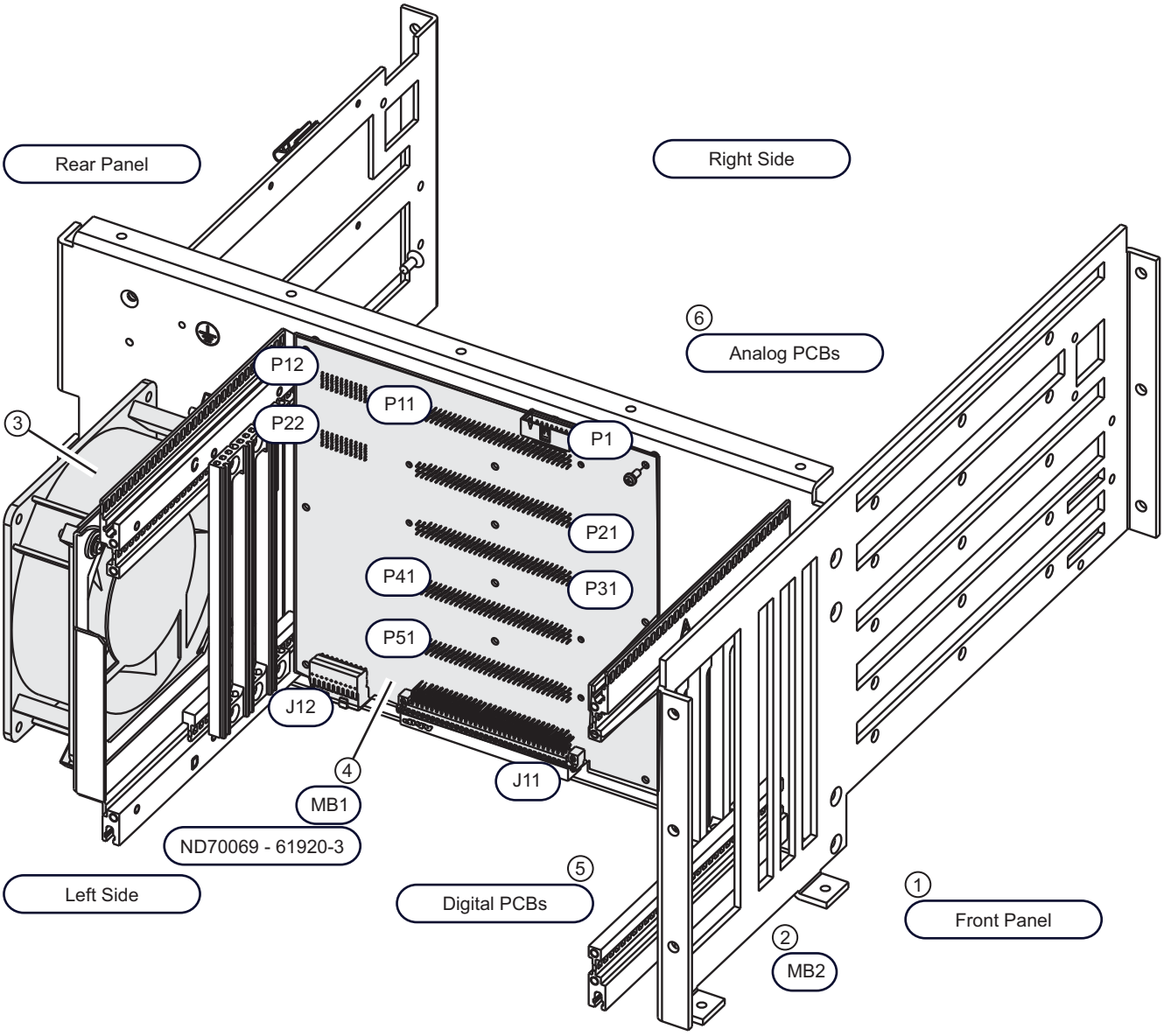

Figure 2-43. Motherboard 1 PCB Assembly – ND70069 – 61920-3 (1 of 2)

Orientation	PCBs
1. Front Panel – Not shown. 2. Left Side – Left chassis plate not shown. 3. Right Side – Right side chassis plate not shown. 4. Rear Panel – Rear Panel Assembly not shown.	5. Digital PCBs – PCBs removed. 6. Analog PCBs – PCBs removed. 7. MB1 – Motherboard 1 PCB Assembly – ND70069 – 61920-3 – Mounted vertically. 8. MB2 – Motherboard 2 PCB Assembly – Mounted horizontally (not shown) • Phase 1 – ND70070 – 61923-3 • Phase 2 – ND73878 – 3-72813-3

Figure 2-43. Motherboard 1 PCB Assembly – ND70069 – 61920-3 (2 of 2)

2-28 Digital Fan Assembly – ND70073 – 62095-1

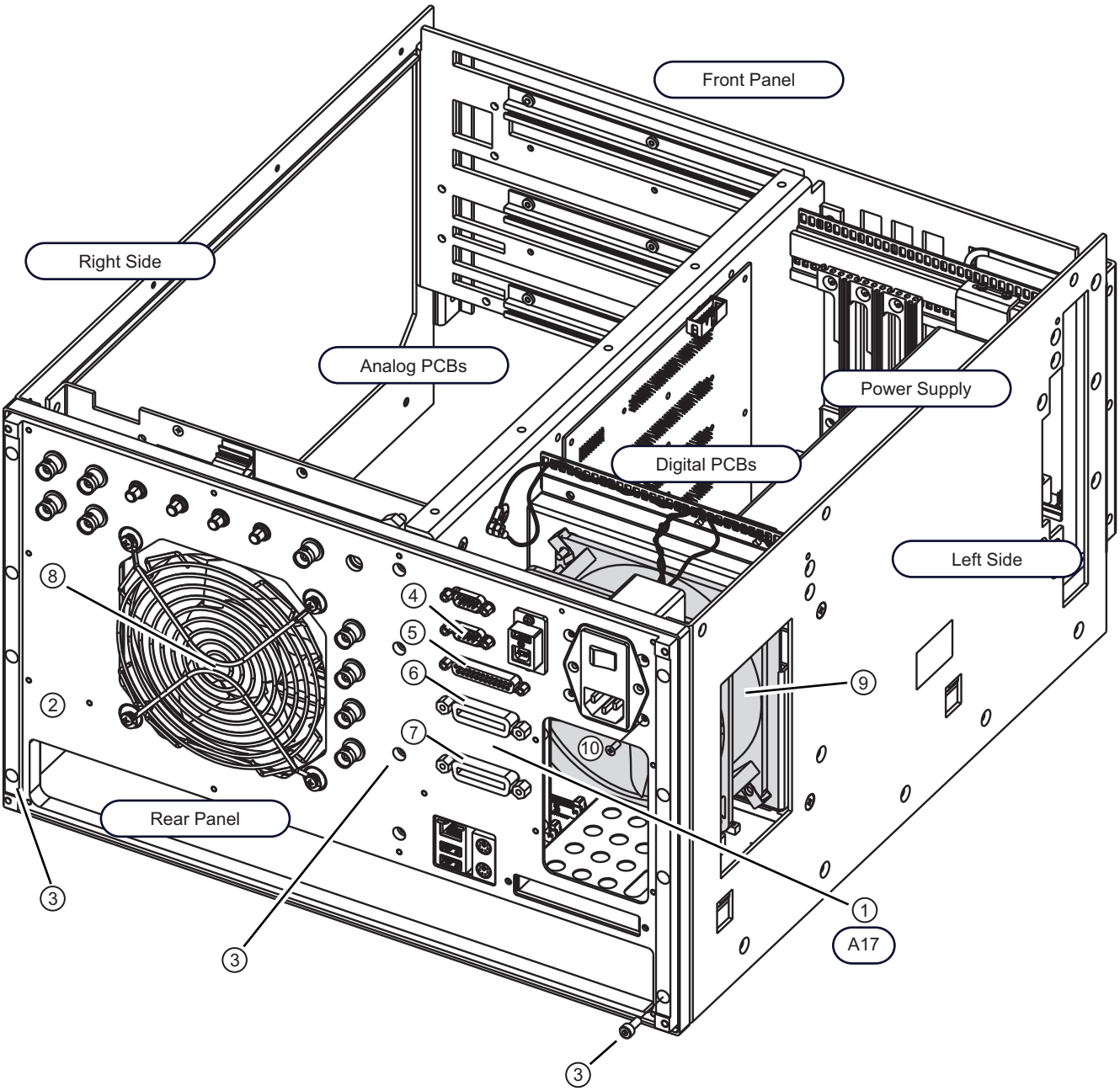

Figure 2-44. Digital PCB Fan Assembly – Major Component Location – Rear View (1 of 2)

Orientation

The instrument chassis viewed from the Rear Panel with the covers off.

Rear Panel

1. A17 Rear Panel PCB located here on the inside of Rear Panel.
2. Rear Panel Logo Sub Plate removed. The sub plate is fastened using 14 pan head Phillips M3 × 6 mm screws. It can be removed with the covers on or off.
3. Rear Panel Fastening Screws. The rear panel chassis is held to the rest of the instrument chassis using 12 socket head Allen M4 × 20 mm screws. There are three rows of four screws each at the left, center, and right.

A17 Rear Panel PCB Assembly Connectors

4. Serial Connector port with two (2) 4×40 × 0.187 M-F connector mounting studs.
5. External I/O Control port with two (2) 4×40 × 0.187 M-F connector mounting studs.
   - The connector mounting studs here and above thread to standard DB connectors.
   - The studs must be removed to service the A17 PCB.
6. IEEE 488.2 GPIB port with two (2) 4×40 × 0.650 connector mounting studs.
7. Dedicated GPIB Port with two (2) 4×40 × 0.650 connector mounting studs.
   - The connector mounting studs here and above thread into standard stackable GPIB Test Cable Connectors.

Fan Assemblies

8. Rear Panel (Analog) Fan Assembly. The Rear Panel must be removed to service the fan.
9. Digital Section Fan Assembly. The Rear Panel must be removed to service the fan.

Figure 2-44. Digital PCB Fan Assembly – Major Component Location – Rear View (2 of 2)

2-29 Replacement Part Cross References

These tables below provide various cross references to the replacement assemblies and components.

- Table 2-3, “Replacement Parts - Sorted by ERN, Name, and RPN” on page 2-95.
- Table 2-4, “Replacement Parts - Sorted by RPN and APN” on page 2-105.
- Table 2-5, “Replacement Parts - Sorted by APN” on page 2-115.

2-30 Sorted by Engineering Reference Number and Name

See Table 2-1, “Notes for All Replacement Part Cross-Reference Tables” on page 2-2 above for all notes. The table below sorts the replacement parts by their engineering reference “A” numbers, then name, and replacement part number.

Table 2-3. Replacement Parts - Sorted by ERN, Name, and RPN (1 of 10)

ERN	Name and Description Location Reference Figure Replacement Procedure	RPN	APN	Procedure Location	Phase Model Option
—	Cable required when replacing the obsolete ND70081 A111 LO Module with the new ND73193 A111 LO Module AND the A130 LO Coupler Module is present on top of the A100 Sampler Module.	No ND	62111-1	Covers Off RF Deck Out SLODM Assembly	Phase 1 VNAs with A111 ND70081 and A130 mounted on A100 Any Model Any Option
—	Cable required when replacing the obsolete ND70081 A111 LO Module with the new ND73193 A111 LO Module AND the A130 LO Coupler Module is present on top of the A101 Sampler Module.	No ND	62111-8	Covers Off RF Deck Out SLODM Assembly	Phase 1 VNAs with A111 ND70081 and A130 mounted on A101 Any Model Any Option
—	Cable required when replacing the obsolete ND70081 A111 LO Module with the new ND73193 A111 Module.	ND73203	67355-12	Covers Off RF Deck Out SLODM Assembly	Phase 1 VNAs Any Model Any Options
—	Digital PCB Fan Assembly	ND70073	62095-1	Covers Off Internal Part Power Supply Digital Fan	Any Phase Any Model Any Option
—	Front Panel Assembly	ND70060	62078	Covers Off RF Deck In Front Panel Off	Phase 1 VNAs with S/N 1106189 and lower Any Model Any Option

Table 2-3. Replacement Parts - Sorted by ERN, Name, and RPN (2 of 10)

ERN	Name and Description Location Reference Figure Replacement Procedure	RPN	APN	Procedure Location	Phase Model Option
—	Front Panel Assembly	ND73194	73257	Covers Off RF Deck In Front Panel Off	Phase 1 VNAs with S/N 1106190 and above Any Model Any Option
—	Front Panel Assembly	ND73195	3-72015	Covers Off RF Deck In Front Panel Off	Phase 2 VNAs Any Model Any Option
—	Front Panel Loop Cable, K connector	No ND	67357-6	Covers On External Part	Any Phase MS4642A MS4644A 051, 061,or 062
—	Front Panel Loop Cable, V (m-m) Connector	No ND	62109-1	Covers On External Part	Any Phase MS4645A MS4647A 051, 061, 062
—	MS4642A Model Identity Label	No ND	3-60124-9	Covers On External Part	Any Phase MS4642A Any Option
—	MS4644A Model Identity Label	No ND	3-60124-10	Covers On External Part	Any Phase MS4644A Any Option
—	MS4645A Model Identity Label	No ND	3-60124-13	Covers On External Part	Any Phase MS4645A Any Option
—	MS4647A Model Identity Label	No ND	3-60124-11	Covers On External Part	Any Phase MS4647A Any Option
—	Phase 1 Power Supply Module and Cable Harness	ND70072	62088	Covers Off Internal Part Power Supply	Phase 1 VNAs Any Model Any Option

Table 2-3. Replacement Parts - Sorted by ERN, Name, and RPN (3 of 10)

ERN	Name and Description Location Reference Figure Replacement Procedure	RPN	APN	Procedure Location	Phase Model Option
—	Phase 2 Power Supply Module and Harness	ND73933	71995	Covers Off Internal Part Power Supply	Phase 2 VNAs Any Model Any Option
—	Rear Panel Fan Assembly	ND70074	62095-2	Covers Off Rear Panel	Any Phase Any Model Any Option
—	Rear Panel Loop Cable, SMA (m-m) Connector	No ND	62112-1	Covers On External Part	Any Phase All Models 051, 061. 062
—	RF Deck Front Panel RF, LO1, and LO2 Panel K Connector, F-F	No ND	K232B	Covers Off RF Deck In	Any Phase MS4647A 080, 081
—	Test Port K Connector	No ND	34YK50C	Covers On External Part	Any Phase MS4642A MS4644A Any Option
—	Test Port V Connector	No ND	34YV50C	Covers On External Part	Any Phase MS4645A MS4647A Any Option
A3	A3 Single Board Computer (SBC) PCB Assembly	ND70061	3-2000-1525 and 3-59632	Covers Off Digital PCBs	Phase 1 VNAs Any Model Any Option
A4	A4 USB Controller PCB Assembly	ND70062	65412-4	Covers Off Digital PCBs	Any Phase Any Model Any Option
A6	A6 cPCI-PMC Adapter Card PCB Assembly	ND70063	3-2000-1485	Covers Off Digital PCBs	Phase 1 VNAs Any Model Any Option
A7	A7 Graphic Adapter PCB Assembly	ND70064	3-2000-1517	Covers Off Digital PCBs	Phase 1 VNAs Any Model Any Option

Table 2-3. Replacement Parts - Sorted by ERN, Name, and RPN (4 of 10)

ERN	Name and Description Location Reference Figure Replacement Procedure	RPN	APN	Procedure Location	Phase Model Option
A8	A8 GPIB Module PCB Assembly	ND70065	65413-3	Covers Off Digital PCBs	Any Phase Any Model Any Option
A10	A10 Digital Signal Processing (DSP) Module PCB Assembly	ND70066	61933-3	Covers Off Digital PCBs	Any Phase Any Model Any Option
A11	A11 IF Band Module PCB Assembly	ND70076	62080	Covers Off Analog PCBs	Phase 1 VNAs Any Model Any Option
A13	A13 Source Module PCB Assembly	ND70077	62082	Covers Off Analog PCBs	Any Phase Any Model Any Option
A13	A13 Source Module PCB Assembly	ND73202	62082-1	Covers Off Analog PCBs	Any Phase Any Model Any Option
A15	A15 Low Band Receiver Module PCB Assembly	ND70075	62079	Covers Off Analog PCBs	Any Phase Any Model Any Option
A17	Rear Panel PCB Assembly	ND70067	61924-3	Covers Off Rear Panel	Any Phase Any Model Any Option
A18	RF Control PCB Assembly	ND70068	61929-3	Covers Off RF Deck In	Any Phase Any Model Any Option
A100 A101 A102 A103	Sampler Module	ND70082	64180	Covers Off RF Deck Out SLODM Assembly	Any Phase Any Model Any Option
A104 A106	Test Coupler, 40 GHz	No ND	66480	Covers Off RF Deck In	Any Phase MS4642A MS4644A Any Option
A104 A106	Test Coupler, 70 GHz	No ND	66245	Covers Off RF Deck In	Any Phase MS4645A MS4647A Any Option

Table 2-3. Replacement Parts - Sorted by ERN, Name, and RPN (5 of 10)

ERN	Name and Description Location Reference Figure Replacement Procedure	RPN	APN	Procedure Location	Phase Model Option
A105 A107	Reference Coupler, 40 GHz	No ND	66487	Covers Off RF Deck In	Any Phase MS4642A MS4644A Any Option
A105 A107	Reference Coupler, 70 GHz	No ND	65270	Covers Off RF Deck In	Any Phase MS4645A MS4647A Any Option
A108	High Band Transfer Switch (HBTS), 40 GHz	ND70092	66221	Covers Off RF Deck In	Any Phase MS4642A MS4644A Any Option
A108	V Integrated High Band Transfer Switch (VITS), 70 GHz	ND70093	66619	Covers Off RF Deck In	MS4645A MS4647A Any Option

Table 2-3. Replacement Parts - Sorted by ERN, Name, and RPN (6 of 10)

ERN	Name and Description Location Reference Figure Replacement Procedure	RPN	APN	Procedure Location	Phase Model Option
A109	Port 1 Level Detector, K Connector, 40 GHz	ND70095	67417-2	Covers Off RF Deck In	Any Phase MS4642A MS4644A Standard No Options
A109	Port 1 Level Detector, K Connector, 40 GHz	ND72124	67417-1	Covers Off RF Deck In	Any Phase MS4642A MS4644A 051, 061, or 062
A109	Port 1 Level Detector, V Connector, 70 GHz	ND70097	67389-2	Covers Off RF Deck In	Any Phase MS4645A MS4647A Standard No Options
A109	Port 1 Level Detector, V Connector, 70 GHz	ND72126	67389-1	Covers Off RF Deck In	Any Phase MS4645A MS4647A 051, 061 or 062
A110	A110 Port 2 Level Detector, V Connector, 70 GHz	ND70096	67389-1	Covers Off RF Deck In	Any Phase MS4645A MS4647A Standard No Options
A110	Port 2 Level Detector, 40 GHz, K Connector	ND72125	67417-2	Covers Off RF Deck In	Any Phase MS4642A MS4644A 051, 061, or 062
A110	Port 2 Level Detector, K Connector, 40 GHz	ND70094	67417-1	Covers Off RF Deck In	Any Phase MS4642A MS4644A Standard No Options
A110	Port 2 Level Detector, V Connector, 70 GHz	ND72127	67389-2	Covers Off RF Deck In	Any Phase MS4645A MS4647A 051, 061, or 062

Table 2-3. Replacement Parts - Sorted by ERN, Name, and RPN (7 of 10)

ERN	Name and Description Location Reference Figure Replacement Procedure	RPN	APN	Procedure Location	Phase Model Option
A111	LO Distribution Module	ND70081	66270	Covers Off RF Deck Out SLODM Assembly	Phase 1 VNAs Any Model Any Option
A111	LO Distribution Module	ND73193	72440	Covers Off RF Deck Out SLODM Assembly	New equipment on VNAs with S/N 1120220 and above. Substitute part on Phase 1 VNAs Any Model Any Option
A112	Switched Doubler Module (SDM)	ND70098	59772	Covers Off RF Deck In	Any Phase MS4644A MS4645A MS4647A Any Option
A113	5-20 GHz Doubler Module	ND70080	64920	Covers Off RF Deck Out	Any Phase Any Model Any Option
A114	Switched Quadrupler Module (SQM)	ND70099	60-327	Covers Off RF Deck In	Any Phase MS4645A MS4647A Any Option
A115	Low Band Transfer Switch	ND70079	64690	Covers Off RF Deck Out	Any Phase Any Model Any Option
A116 A117 A118 A119	Low Band Bridge	ND70078	64016	Covers Off RF Deck Out or RF Deck In	Any Phase Any Model Any Option
A120 A121 A122 A123	High Band Step Attenuator, Test or Source, 70 GHz	No ND	66050	Covers Off RF Deck In	Any Phase MS4645A MS4647A 061, 062

Table 2-3. Replacement Parts - Sorted by ERN, Name, and RPN (8 of 10)

ERN	Name and Description Location Reference Figure Replacement Procedure	RPN	APN	Procedure Location	Phase Model Option
A120 A123	High Band Step Attenuator, Test, 40 GHz	No ND	68570	Covers Off RF Deck In	Any Phase MS4642A MS4644A 061, 062
A121 A122	High Band Step Attenuator, Source, 40 GHz	No ND	66052	Covers Off RF Deck In	Any Phase MS4642A MS4644A 061, 062
A124	Low Band Test Attenuator, Port 1	ND70085	3-2000-1502	Covers Off RF Deck Out	Any Phase Any Model Option 062
A125	Low Band Source Attenuator, Port 1	ND70084	3-2000-1502	Covers Off RF Deck Out	Any Phase Any Model Option 061 or 062
A126	Low Band Source Attenuator, Port 2	ND70086	3-2000-1502	Covers Off RF Deck Out	Any Phase Any Model Option 062
A127	Low Band Test Attenuator, Port 2	ND70087	3-2000-1502	Covers Off RF Deck Out	Any Phase Any Model 061, 062
A128	Diplexer/Bias Tee Module, Port 1, 40 GHz.	ND73940	74277	Covers Off RF Deck In	Any Phase MS4642A MS4644A Any Option
A128	Diplexer/Bias Tee Module, Port 1, 40 GHz7.	ND70088	66465	Covers Off RF Deck In	Any Phase MS4642A MS4644A Any Option
A128	Diplexer/Bias Tee Module, Port 1, 70 GHz	ND73942	74278	Covers Off RF Deck In	Any Phase MS4645A MS4647A Any Option
A128	Diplexer/Bias Tee Module, Port 1, 70 GHz	ND70090	64911	Covers Off RF Deck In	Any Phase MS4645A MS4647A Any Option

Table 2-3. Replacement Parts - Sorted by ERN, Name, and RPN (9 of 10)

ERN	Name and Description Location Reference Figure Replacement Procedure	RPN	APN	Procedure Location	Phase Model Option
A129	Diplexer/Bias Tee Module, Port 2, 40 GHz	ND70089	66465	Covers Off RF Deck In	Any Phase MS4642A MS4644A Any Option
A129	Diplexer/Bias Tee Module, Port 2, 40 GHz	ND73941	74277	Covers Off RF Deck In	Any Phase MS4642A MS4644A Any Option
A129	Diplexer/Bias Tee Module, Port 2, 70 GHz	ND70091	64911	Covers Off RF Deck In	Any Phase MS4645A MS4647A Any Option
A129	Diplexer/Bias Tee Module, Port 2, 70 GHz	ND73943	74278	Covers Off RF Deck In	Any Phase MS4645A MS4647A Any Option
A130	LO Coupler Module	ND70083	68848	Covers Off RF Deck Out SLODM Assembly	Phase 1 VNAs Any Model Any Option
A131 A132	LO Coupler Module	No ND	70685	Covers Off RF Deck Out SLODM Assembly	Any Phase MS4647A 080, 081
A133	20-40 GHz RF Coupler Module	No ND	72237	Covers Off RF Deck In	Any Phase MS4647A 080, 081
CB	Carrier Board PCB (CB PCB) Assembly	ND73874	3-72444-3	Covers Off Digital PCBs	Phase 2 VNAs Any Model Any Option
GPU	Graphics Processor Unit (GPU PCB) ATI PCB Assembly	ND73876	3-2000-1661	Covers Off Digital PCBs	Phase 2 VNAs Any Model Any Option
HDD	Hard Disk Assembly	ND70071	62091	Covers On External Part	Any Phase Any Model Any Option

Table 2-3. Replacement Parts - Sorted by ERN, Name, and RPN (10 of 10)

ERN	Name and Description Location Reference Figure Replacement Procedure	RPN	APN	Procedure Location	Phase Model Option
MB1	Motherboard 1 (MB1) PCB Assembly	ND70069	61920-3	Covers Off Internal Part Motherboard	Any Phase Any Model Any Option
MB2	Phase 1 Motherboard 2 (MB2) PCB Assembly	ND70070	61923-3	Covers Off Internal Part Motherboard	Phase 1 VNAs Any Model Any Option
MB2	Phase 2 Motherboard 2 (MB2) PCB Assembly	ND73878	3-72813-3	Covers Off Internal Part Motherboard	Phase 2 VNAs Any Model Any Option
SBC	Single Board Computer (SBC PCB)	ND73875	3-2000-1668	Covers Off Digital PCBs	Phase 2 VNAs Any Model Any Option
SSD	Solid State Drive Assembly (SSD)	ND73934	67861	Covers On External Part	Any Phase Any Model Any Option
SO DIMM	Small Outline Dual-Inline Memory Module (SODIMM)	No ND	3-2000-1671	Covers Off Digital PCBs	Phase 2 VNAs Any Model Any Option

2-31 Sorted by Replacement Part Number

See Table 2-1, "Notes for All Replacement Part Cross-Reference Tables" on page 2-2 above for all notes. The table below sorts the replacement parts by their replacement part number and Anritsu part number.

Table 2-4. Replacement Parts - Sorted by RPN and APN (1 of 10)

RPN	APN	ERN	Name and Description Location Reference Figure Replacement Procedure	Procedure Location	Phase Model Option
ND70060	62078	—	Front Panel Assembly	Covers Off RF Deck In Front Panel Off	Phase 1 VNAs with S/N 1106189 and lower Any Model Any Option
ND70061	3-2000-1525 and 3-59632	A3	A3 Single Board Computer (SBC) PCB Assembly	Covers Off Digital PCBs	Phase 1 VNAs Any Model Any Option
ND70062	65412-4	A4	A4 USB Controller PCB Assembly	Covers Off Digital PCBs	Any Phase Any Model Any Option
ND70063	3-2000-1485	A6	A6 cPCI-PMC Adapter Card PCB Assembly	Covers Off Digital PCBs	Phase 1 VNAs Any Model Any Option
ND70064	3-2000-1517	A7	A7 Graphic Adapter PCB Assembly	Covers Off Digital PCBs	Phase 1 VNAs Any Model Any Option
ND70065	65413-3	A8	A8 GPIB Module PCB Assembly	Covers Off Digital PCBs	Any Phase Any Model Any Option
ND70066	61933-3	A10	A10 Digital Signal Processing (DSP) Module PCB Assembly	Covers Off Digital PCBs	Any Phase Any Model Any Option
ND70067	61924-3	A17	Rear Panel PCB Assembly	Covers Off Rear Panel	Any Phase Any Model Any Option
ND70068	61929-3	A18	RF Control PCB Assembly	Covers Off RF Deck In	Any Phase Any Model Any Option

Table 2-4. Replacement Parts - Sorted by RPN and APN (2 of 10)

RPN	APN	ERN	Name and Description Location Reference Figure Replacement Procedure	Procedure Location	Phase Model Option
ND70069	61920-3	MB1	Motherboard 1 (MB1) PCB Assembly	Covers Off Internal Part Motherboard	Any Phase Any Model Any Option
ND70070	61923-3	MB2	Phase 1 Motherboard 2 (MB2) PCB Assembly	Covers Off Internal Part Motherboard	Phase 1 VNAs Any Model Any Option
ND70071	62091	HDD	Hard Disk Assembly	Covers On External Part	Any Phase Any Model Any Option
ND70072	62088	—	Phase 1 Power Supply Module and Cable Harness	Covers Off Internal Part Power Supply	Phase 1 VNAs Any Model Any Option
ND70073	62095-1	—	Digital PCB Fan Assembly	Covers Off Internal Part Power Supply Digital Fan	Any Phase Any Model Any Option
ND70074	62095-2	—	Rear Panel Fan Assembly	Covers Off Rear Panel	Any Phase Any Model Any Option
ND70075	62079	A15	A15 Low Band Receiver Module PCB Assembly	Covers Off Analog PCBs	Any Phase Any Model Any Option
ND70076	62080	A11	A11 IF Band Module PCB Assembly	Covers Off Analog PCBs	Phase 1 VNAs Any Model Any Option
ND70077	62082	A13	A13 Source Module PCB Assembly	Covers Off Analog PCBs	Any Phase Any Model Any Option
ND70078	64016	A116 A117 A118 A119	Low Band Bridge	Covers Off RF Deck Out or RF Deck In	Any Phase Any Model Any Option
ND70079	64690	A115	Low Band Transfer Switch	Covers Off RF Deck Out	Any Phase Any Model Any Option

Table 2-4. Replacement Parts - Sorted by RPN and APN (3 of 10)

RPN	APN	ERN	Name and Description Location Reference Figure Replacement Procedure	Procedure Location	Phase Model Option
ND70080	64920	A113	5-20 GHz Doubler Module	Covers Off RF Deck Out	Any Phase Any Model Any Option
ND70081	66270	A111	LO Distribution Module	Covers Off RF Deck Out SLODM Assembly	Phase 1 VNAs Any Model Any Option
ND70082	64180	A100 A101 A102 A103	Sampler Module	Covers Off RF Deck Out SLODM Assembly	Any Phase Any Model Any Option
ND70083	68848	A130	LO Coupler Module	Covers Off RF Deck Out SLODM Assembly	Phase 1 VNAs Any Model Any Option
ND70084	3-2000-1502	A125	Low Band Source Attenuator, Port 1	Covers Off RF Deck Out	Any Phase Any Model Option 061 or 062
ND70085	3-2000-1502	A124	Low Band Test Attenuator, Port 1	Covers Off RF Deck Out	Any Phase Any Model Option 062
ND70086	3-2000-1502	A126	Low Band Source Attenuator, Port 2	Covers Off RF Deck Out	Any Phase Any Model Option 062
ND70087	3-2000-1502	A127	Low Band Test Attenuator, Port 2	Covers Off RF Deck Out	Any Phase Any Model 061, 062
ND70088	66465	A128	Diplexer/Bias Tee Module, Port 1, 40 GHz7.	Covers Off RF Deck In	Any Phase MS4642A MS4644A Any Option
ND70089	66465	A129	Diplexer/Bias Tee Module, Port 2, 40 GHz	Covers Off RF Deck In	Any Phase MS4642A MS4644A Any Option

Table 2-4. Replacement Parts - Sorted by RPN and APN (4 of 10)

RPN	APN	ERN	Name and Description Location Reference Figure Replacement Procedure	Procedure Location	Phase Model Option
ND70090	64911	A128	Diplexer/Bias Tee Module, Port 1, 70 GHz	Covers Off RF Deck In	Any Phase MS4645A MS4647A Any Option
ND70091	64911	A129	Diplexer/Bias Tee Module, Port 2, 70 GHz	Covers Off RF Deck In	Any Phase MS4645A MS4647A Any Option
ND70092	66221	A108	High Band Transfer Switch (HBTS), 40 GHz	Covers Off RF Deck In	Any Phase MS4642A MS4644A Any Option
ND70093	66619	A108	V Integrated High Band Transfer Switch (VITS), 70 GHz	Covers Off RF Deck In	MS4645A MS4647A Any Option
ND70094	67417-1	A110	Port 2 Level Detector, K Connector, 40 GHz	Covers Off RF Deck In	Any Phase MS4642A MS4644A Standard No Options

Table 2-4. Replacement Parts - Sorted by RPN and APN (5 of 10)

RPN	APN	ERN	Name and Description Location Reference Figure Replacement Procedure	Procedure Location	Phase Model Option
ND70095	67417-2	A109	Port 1 Level Detector, K Connector, 40 GHz	Covers Off RF Deck In	Any Phase MS4642A MS4644A Standard No Options
ND70096	67389-1	A110	A110 Port 2 Level Detector, V Connector, 70 GHz	Covers Off RF Deck In	Any Phase MS4645A MS4647A Standard No Options
ND70097	67389-2	A109	Port 1 Level Detector, V Connector, 70 GHz	Covers Off RF Deck In	Any Phase MS4645A MS4647A Standard No Options
ND70098	59772	A112	Switched Doubler Module (SDM)	Covers Off RF Deck In	Any Phase MS4644A MS4645A MS4647A Any Option
ND70099	60-327	A114	Switched Quadrupler Module (SQM)	Covers Off RF Deck In	Any Phase MS4645A MS4647A Any Option
ND72124	67417-1	A109	Port 1 Level Detector, K Connector, 40 GHz	Covers Off RF Deck In	Any Phase MS4642A MS4644A 051, 061, or 062
ND72125	67417-2	A110	Port 2 Level Detector, 40 GHz, K Connector	Covers Off RF Deck In	Any Phase MS4642A MS4644A 051, 061, or 062
ND72126	67389-1	A109	Port 1 Level Detector, V Connector, 70 GHz	Covers Off RF Deck In	Any Phase MS4645A MS4647A 051, 061 or 062

Table 2-4. Replacement Parts - Sorted by RPN and APN (6 of 10)

RPN	APN	ERN	Name and Description Location Reference Figure Replacement Procedure	Procedure Location	Phase Model Option
ND72127	67389-2	A110	Port 2 Level Detector, V Connector, 70 GHz	Covers Off RF Deck In	Any Phase MS4645A MS4647A 051, 061, or 062
ND73193	72440	A111	LO Distribution Module	Covers Off RF Deck Out SLODM Assembly	New equipment on VNAs with S/N 1120220 and above. Substitute part on Phase 1 VNAs Any Model Any Option
ND73194	73257	—	Front Panel Assembly	Covers Off RF Deck In Front Panel Off	Phase 1 VNAs with S/N 1106190 and above Any Model Any Option
ND73195	3-72015	—	Front Panel Assembly	Covers Off RF Deck In Front Panel Off	Phase 2 VNAs Any Model Any Option
ND73202	62082-1	A13	A13 Source Module PCB Assembly	Covers Off Analog PCBs	Any Phase Any Model Any Option
ND73203	67355-12	—	Cable required when replacing the obsolete ND70081 A111 LO Module with the new ND73193 A111 Module.	Covers Off RF Deck Out SLODM Assembly	Phase 1 VNAs Any Model Any Options
ND73874	3-72444-3	CB	Carrier Board PCB (CB PCB) Assembly	Covers Off Digital PCBs	Phase 2 VNAs Any Model Any Option

Table 2-4. Replacement Parts - Sorted by RPN and APN (7 of 10)

RPN	APN	ERN	Name and Description Location Reference Figure Replacement Procedure	Procedure Location	Phase Model Option
ND73875	3-2000-1668	SBC	Single Board Computer (SBC PCB)	Covers Off Digital PCBs	Phase 2 VNAs Any Model Any Option
ND73876	3-2000-1661	GPU	Graphics Processor Unit (GPU PCB) ATI PCB Assembly	Covers Off Digital PCBs	Phase 2 VNAs Any Model Any Option
ND73878	3-72813-3	MB2	Phase 2 Motherboard 2 (MB2) PCB Assembly	Covers Off Internal Part Motherboard	Phase 2 VNAs Any Model Any Option
ND73933	71995	—	Phase 2 Power Supply Module and Harness	Covers Off Internal Part Power Supply	Phase 2 VNAs Any Model Any Option
ND73934	67861	SSD	Solid State Drive Assembly (SSD)	Covers On External Part	Any Phase Any Model Any Option
ND73940	74277	A128	Diplexer/Bias Tee Module, Port 1, 40 GHz.	Covers Off RF Deck In	Any Phase MS4642A MS4644A Any Option
ND73941	74277	A129	Diplexer/Bias Tee Module, Port 2, 40 GHz	Covers Off RF Deck In	Any Phase MS4642A MS4644A Any Option
ND73942	74278	A128	Diplexer/Bias Tee Module, Port 1, 70 GHz	Covers Off RF Deck In	Any Phase MS4645A MS4647A Any Option
ND73943	74278	A129	Diplexer/Bias Tee Module, Port 2, 70 GHz	Covers Off RF Deck In	Any Phase MS4645A MS4647A Any Option
No ND	3-60124-9	—	MS4642A Model Identity Label	Covers On External Part	Any Phase MS4642A Any Option

Table 2-4. Replacement Parts - Sorted by RPN and APN (8 of 10)

RPN	APN	ERN	Name and Description Location Reference Figure Replacement Procedure	Procedure Location	Phase Model Option
No ND	3-60124-10	—	MS4644A Model Identity Label	Covers On External Part	Any Phase MS4644A Any Option
No ND	3-60124-13	—	MS4645A Model Identity Label	Covers On External Part	Any Phase MS4645A Any Option
No ND	3-60124-11	—	MS4647A Model Identity Label	Covers On External Part	Any Phase MS4647A Any Option
No ND	3-2000-1671	SO DIMM	Small Outline Dual-Inline Memory Module (SODIMM)	Covers Off Digital PCBs	Phase 2 VNAs Any Model Any Option
No ND	62109-1	—	Front Panel Loop Cable, V (m-m) Connector	Covers On External Part	Any Phase MS4645A MS4647A 051, 061, 062
No ND	62111-1	—	Cable required when replacing the obsolete ND70081 A111 LO Module with the new ND73193 A111 LO Module AND the A130 LO Coupler Module is present on top of the A100 Sampler Module.	Covers Off RF Deck Out SLODM Assembly	Phase 1 VNAs with A111 ND70081 and A130 mounted on A100 Any Model Any Option
No ND	62111-8	—	Cable required when replacing the obsolete ND70081 A111 LO Module with the new ND73193 A111 LO Module AND the A130 LO Coupler Module is present on top of the A101 Sampler Module.	Covers Off RF Deck Out SLODM Assembly	Phase 1 VNAs with A111 ND70081 and A130 mounted on A101 Any Model Any Option
No ND	62112-1	—	Rear Panel Loop Cable, SMA (m-m) Connector	Covers On External Part	Any Phase All Models 051, 061. 062

Table 2-4. Replacement Parts - Sorted by RPN and APN (9 of 10)

RPN	APN	ERN	Name and Description Location Reference Figure Replacement Procedure	Procedure Location	Phase Model Option
No ND	65270	A105 A107	Reference Coupler, 70 GHz	Covers Off RF Deck In	Any Phase MS4645A MS4647A Any Option
No ND	66050	A120 A121 A122 A123	High Band Step Attenuator, Test or Source, 70 GHz	Covers Off RF Deck In	Any Phase MS4645A MS4647A 061, 062
No ND	66052	A121 A122	High Band Step Attenuator, Source, 40 GHz	Covers Off RF Deck In	Any Phase MS4642A MS4644A 061, 062
No ND	66245	A104 A106	Test Coupler, 70 GHz	Covers Off RF Deck In	Any Phase MS4645A MS4647A Any Option
No ND	66480	A104 A106	Test Coupler, 40 GHz	Covers Off RF Deck In	Any Phase MS4642A MS4644A Any Option
No ND	66487	A105 A107	Reference Coupler, 40 GHz	Covers Off RF Deck In	Any Phase MS4642A MS4644A Any Option
No ND	67357-6	—	Front Panel Loop Cable, K connector	Covers On External Part	Any Phase MS4642A MS4644A 051, 061,or 062
No ND	68570	A120 A123	High Band Step Attenuator, Test, 40 GHz	Covers Off RF Deck In	Any Phase MS4642A MS4644A 061, 062
No ND	70685	A131 A132	LO Coupler Module	Covers Off RF Deck Out SLODM Assembly	Any Phase MS4647A 080, 081
No ND	72237	A133	20-40 GHz RF Coupler Module	Covers Off RF Deck In	Any Phase MS4647A 080, 081

Table 2-4. Replacement Parts - Sorted by RPN and APN (10 of 10)

RPN	APN	ERN	Name and Description Location Reference Figure Replacement Procedure	Procedure Location	Phase Model Option
No ND	34YK50C	—	Test Port K Connector	Covers On External Part	Any Phase MS4642A MS4644A Any Option
No ND	34YV50C	—	Test Port V Connector	Covers On External Part	Any Phase MS4645A MS4647A Any Option
No ND	K232B	—	RF Deck Front Panel RF, LO1, and LO2 Panel K Connector, F-F	Covers Off RF Deck In	Any Phase MS4647A 080, 081

2-32 Sorted by Anritsu Part Number

See Table 2-1, "Notes for All Replacement Part Cross-Reference Tables" on page 2-2 above for all notes. The table below sorts the replacement parts by their replacement part number and Anritsu part number.

Table 2-5. Replacement Parts - Sorted by APN (1 of 10)

APN	RPN	ERN	Name and Description Location Reference Figure Replacement Procedure	Procedure Location	Phase Model Option
3-2000-1485	ND70063	A6	A6 cPCI-PMC Adapter Card PCB Assembly	Covers Off Digital PCBs	Phase 1 VNAs Any Model Any Option
3-2000-1517	ND70064	A7	A7 Graphic Adapter PCB Assembly	Covers Off Digital PCBs	Phase 1 VNAs Any Model Any Option
3-2000-1502	ND70084	A125	Low Band Source Attenuator, Port 1	Covers Off RF Deck Out	Any Phase Any Model Option 061 or 062
3-2000-1502	ND70085	A124	Low Band Test Attenuator, Port 1	Covers Off RF Deck Out	Any Phase Any Model Option 062
3-2000-1502	ND70086	A126	Low Band Source Attenuator, Port 2	Covers Off RF Deck Out	Any Phase Any Model Option 062
3-2000-1502	ND70087	A127	Low Band Test Attenuator, Port 2	Covers Off RF Deck Out	Any Phase Any Model 061, 062
3-72015	ND73195	—	Front Panel Assembly	Covers Off RF Deck In Front Panel Off	Phase 2 VNAs Any Model Any Option
3-72444-3	ND73874	CB	Carrier Board PCB (CB PCB) Assembly	Covers Off Digital PCBs	Phase 2 VNAs Any Model Any Option
3-2000-1668	ND73875	SBC	Single Board Computer (SBC PCB)	Covers Off Digital PCBs	Phase 2 VNAs Any Model Any Option

Table 2-5. Replacement Parts - Sorted by APN (2 of 10)

APN	RPN	ERN	Name and Description Location Reference Figure Replacement Procedure	Procedure Location	Phase Model Option
3-2000-1661	ND73876	GPU	Graphics Processor Unit (GPU PCB) ATI PCB Assembly	Covers Off Digital PCBs	Phase 2 VNAs Any Model Any Option
3-72813-3	ND73878	MB2	Phase 2 Motherboard 2 (MB2) PCB Assembly	Covers Off Internal Part Motherboard	Phase 2 VNAs Any Model Any Option
3-60124-9	No ND	—	MS4642A Model Identity Label	Covers On External Part	Any Phase MS4642A Any Option
3-60124-10	No ND	—	MS4644A Model Identity Label	Covers On External Part	Any Phase MS4644A Any Option
3-60124-13	No ND	—	MS4645A Model Identity Label	Covers On External Part	Any Phase MS4645A Any Option
3-60124-11	No ND	—	MS4647A Model Identity Label	Covers On External Part	Any Phase MS4647A Any Option
3-2000-1671	No ND	SO DIMM	Small Outline Dual-Inline Memory Module (SODIMM)	Covers Off Digital PCBs	Phase 2 VNAs Any Model Any Option
60-327	ND70099	A114	Switched Quadrupler Module (SQM)	Covers Off RF Deck In	Any Phase MS4645A MS4647A Any Option
59772	ND70098	A112	Switched Doubler Module (SDM)	Covers Off RF Deck In	Any Phase MS4644A MS4645A MS4647A Any Option
61920-3	ND70069	MB1	Motherboard 1 (MB1) PCB Assembly	Covers Off Internal Part Motherboard	Any Phase Any Model Any Option

Table 2-5. Replacement Parts - Sorted by APN (3 of 10)

APN	RPN	ERN	Name and Description Location Reference Figure Replacement Procedure	Procedure Location	Phase Model Option
61923-3	ND70070	MB2	Phase 1 Motherboard 2 (MB2) PCB Assembly	Covers Off Internal Part Motherboard	Phase 1 VNAs Any Model Any Option
61924-3	ND70067	A17	Rear Panel PCB Assembly	Covers Off Rear Panel	Any Phase Any Model Any Option
61929-3	ND70068	A18	RF Control PCB Assembly	Covers Off RF Deck In	Any Phase Any Model Any Option
61933-3	ND70066	A10	A10 Digital Signal Processing (DSP) Module PCB Assembly	Covers Off Digital PCBs	Any Phase Any Model Any Option
62078	ND70060	—	Front Panel Assembly	Covers Off RF Deck In Front Panel Off	Phase 1 VNAs with S/N 1106189 and lower Any Model Any Option
62079	ND70075	A15	A15 Low Band Receiver Module PCB Assembly	Covers Off Analog PCBs	Any Phase Any Model Any Option
62080	ND70076	A11	A11 IF Band Module PCB Assembly	Covers Off Analog PCBs	Phase 1 VNAs Any Model Any Option
62082	ND70077	A13	A13 Source Module PCB Assembly	Covers Off Analog PCBs	Any Phase Any Model Any Option
62082-1	ND73202	A13	A13 Source Module PCB Assembly	Covers Off Analog PCBs	Any Phase Any Model Any Option
62088	ND70072	—	Phase 1 Power Supply Module and Cable Harness	Covers Off Internal Part Power Supply	Phase 1 VNAs Any Model Any Option

Table 2-5. Replacement Parts - Sorted by APN (4 of 10)

APN	RPN	ERN	Name and Description Location Reference Figure Replacement Procedure	Procedure Location	Phase Model Option
62091	ND70071	HDD	Hard Disk Assembly	Covers On External Part	Any Phase Any Model Any Option
62095-1	ND70073	—	Digital PCB Fan Assembly	Covers Off Internal Part Power Supply Digital Fan	Any Phase Any Model Any Option
62095-2	ND70074	—	Rear Panel Fan Assembly	Covers Off Rear Panel	Any Phase Any Model Any Option
62109-1	No ND	—	Front Panel Loop Cable, V (m-m) Connector	Covers On External Part	Any Phase MS4645A MS4647A 051, 061, 062
62111-1	No ND	—	Cable required when replacing the obsolete ND70081 A111 LO Module with the new ND73193 A111 LO Module AND the A130 LO Coupler Module is present on top of the A100 Sampler Module.	Covers Off RF Deck Out SLODM Assembly	Phase 1 VNAs with A111 ND70081 and A130 mounted on A100 Any Model Any Option
62111-8	No ND	—	Cable required when replacing the obsolete ND70081 A111 LO Module with the new ND73193 A111 LO Module AND the A130 LO Coupler Module is present on top of the A101 Sampler Module.	Covers Off RF Deck Out SLODM Assembly	Phase 1 VNAs with A111 ND70081 and A130 mounted on A101 Any Model Any Option
62112-1	No ND	—	Rear Panel Loop Cable, SMA (m-m) Connector	Covers On External Part	Any Phase All Models 051, 061. 062
64016	ND70078	A116 A117 A118 A119	Low Band Bridge	Covers Off RF Deck Out or RF Deck In	Any Phase Any Model Any Option

Table 2-5. Replacement Parts - Sorted by APN (5 of 10)

APN	RPN	ERN	Name and Description Location Reference Figure Replacement Procedure	Procedure Location	Phase Model Option
64180	ND70082	A100 A101 A102 A103	Sampler Module	Covers Off RF Deck Out SLODM Assembly	Any Phase Any Model Any Option
64690	ND70079	A115	Low Band Transfer Switch	Covers Off RF Deck Out	Any Phase Any Model Any Option
64911	ND70090	A128	Diplexer/Bias Tee Module, Port 1, 70 GHz	Covers Off RF Deck In	Any Phase MS4645A MS4647A Any Option
64911	ND70091	A129	Diplexer/Bias Tee Module, Port 2, 70 GHz	Covers Off RF Deck In	Any Phase MS4645A MS4647A Any Option
64920	ND70080	A113	5-20 GHz Doubler Module	Covers Off RF Deck Out	Any Phase Any Model Any Option
65270	No ND	A105 A107	Reference Coupler, 70 GHz	Covers Off RF Deck In	Any Phase MS4645A MS4647A Any Option
65412-4	ND70062	A4	A4 USB Controller PCB Assembly	Covers Off Digital PCBs	Any Phase Any Model Any Option
65413-3	ND70065	A8	A8 GPIB Module PCB Assembly	Covers Off Digital PCBs	Any Phase Any Model Any Option
66050	No ND	A120 A121 A122 A123	High Band Step Attenuator, Test or Source, 70 GHz	Covers Off RF Deck In	Any Phase MS4645A MS4647A 061, 062
66052	No ND	A121 A122	High Band Step Attenuator, Source, 40 GHz	Covers Off RF Deck In	Any Phase MS4642A MS4644A 061, 062

Table 2-5. Replacement Parts - Sorted by APN (6 of 10)

APN	RPN	ERN	Name and Description Location Reference Figure Replacement Procedure	Procedure Location	Phase Model Option
66221	ND70092	A108	High Band Transfer Switch (HBTS), 40 GHz	Covers Off RF Deck In	Any Phase MS4642A MS4644A Any Option
66245	No ND	A104 A106	Test Coupler, 70 GHz	Covers Off RF Deck In	Any Phase MS4645A MS4647A Any Option
66270	ND70081	A111	LO Distribution Module	Covers Off RF Deck Out SLODM Assembly	Phase 1 VNAs Any Model Any Option
66465	ND70088	A128	Diplexer/Bias Tee Module, Port 1, 40 GHz7.	Covers Off RF Deck In	Any Phase MS4642A MS4644A Any Option
66465	ND70089	A129	Diplexer/Bias Tee Module, Port 2, 40 GHz	Covers Off RF Deck In	Any Phase MS4642A MS4644A Any Option
66480	No ND	A104 A106	Test Coupler, 40 GHz	Covers Off RF Deck In	Any Phase MS4642A MS4644A Any Option
66487	No ND	A105 A107	Reference Coupler, 40 GHz	Covers Off RF Deck In	Any Phase MS4642A MS4644A Any Option
66619	ND70093	A108	V Integrated High Band Transfer Switch (VITS), 70 GHz	Covers Off RF Deck In	MS4645A MS4647A Any Option
67355-12	ND73203	—	Cable required when replacing the obsolete ND70081 A111 LO Module with the new ND73193 A111 Module.	Covers Off RF Deck Out SLODM Assembly	Phase 1 VNAs Any Model Any Options

Table 2-5. Replacement Parts - Sorted by APN (7 of 10)

APN	RPN	ERN	Name and Description Location Reference Figure Replacement Procedure	Procedure Location	Phase Model Option
67357-6	No ND	—	Front Panel Loop Cable, K connector	Covers On External Part	Any Phase MS4642A MS4644A 051, 061,or 062
67389-1	ND70096	A110	A110 Port 2 Level Detector, V Connector, 70 GHz	Covers Off RF Deck In	Any Phase MS4645A MS4647A Standard No Options
67389-2	ND70097	A109	Port 1 Level Detector, V Connector, 70 GHz	Covers Off RF Deck In	Any Phase MS4645A MS4647A Standard No Options
67389-1	ND72126	A109	Port 1 Level Detector, V Connector, 70 GHz	Covers Off RF Deck In	Any Phase MS4645A MS4647A 051, 061 or 062
67389-2	ND72127	A110	Port 2 Level Detector, V Connector, 70 GHz	Covers Off RF Deck In	Any Phase MS4645A MS4647A 051, 061, or 062
67417-1	ND70094	A110	Port 2 Level Detector, K Connector, 40 GHz	Covers Off RF Deck In	Any Phase MS4642A MS4644A Standard No Options

Table 2-5. Replacement Parts - Sorted by APN (8 of 10)

APN	RPN	ERN	Name and Description Location Reference Figure Replacement Procedure	Procedure Location	Phase Model Option
67417-2	ND70095	A109	Port 1 Level Detector, K Connector, 40 GHz	Covers Off RF Deck In	Any Phase MS4642A MS4644A Standard No Options
67417-1	ND72124	A109	Port 1 Level Detector, K Connector, 40 GHz	Covers Off RF Deck In	Any Phase MS4642A MS4644A 051, 061, or 062
67417-2	ND72125	A110	Port 2 Level Detector, 40 GHz, K Connector	Covers Off RF Deck In	Any Phase MS4642A MS4644A 051, 061, or 062
67861	ND73934	SSD	Solid State Drive Assembly (SSD)	Covers On External Part	Any Phase Any Model Any Option
68570	No ND	A120 A123	High Band Step Attenuator, Test, 40 GHz	Covers Off RF Deck In	Any Phase MS4642A MS4644A 061, 062
68848	ND70083	A130	LO Coupler Module	Covers Off RF Deck Out SLODM Assembly	Phase 1 VNAs Any Model Any Option
70685	No ND	A131 A132	LO Coupler Module	Covers Off RF Deck Out SLODM Assembly	Any Phase MS4647A 080, 081
71995	ND73933	—	Phase 2 Power Supply Module and Harness	Covers Off Internal Part Power Supply	Phase 2 VNAs Any Model Any Option
72237	No ND	A133	20-40 GHz RF Coupler Module	Covers Off RF Deck In	Any Phase MS4647A 080, 081

Table 2-5. Replacement Parts - Sorted by APN (9 of 10)

APN	RPN	ERN	Name and Description Location Reference Figure Replacement Procedure	Procedure Location	Phase Model Option
72440	ND73193	A111	LO Distribution Module	Covers Off RF Deck Out SLODM Assembly	New equipment on VNAs with S/N 1120220 and above. Substitute part on Phase 1 VNAs Any Model Any Option
73257	ND73194	—	Front Panel Assembly	Covers Off RF Deck In Front Panel Off	Phase 1 VNAs with S/N 1106190 and above Any Model Any Option
74277	ND73940	A128	Diplexer/Bias Tee Module, Port 1, 40 GHz.	Covers Off RF Deck In	Any Phase MS4642A MS4644A Any Option
74277	ND73941	A129	Diplexer/Bias Tee Module, Port 2, 40 GHz	Covers Off RF Deck In	Any Phase MS4642A MS4644A Any Option
74278	ND73942	A128	Diplexer/Bias Tee Module, Port 1, 70 GHz	Covers Off RF Deck In	Any Phase MS4645A MS4647A Any Option
74278	ND73943	A129	Diplexer/Bias Tee Module, Port 2, 70 GHz	Covers Off RF Deck In	Any Phase MS4645A MS4647A Any Option
3-2000-1525 and 3-59632	ND70061	A3	A3 Single Board Computer (SBC) PCB Assembly	Covers Off Digital PCBs	Phase 1 VNAs Any Model Any Option

Table 2-5. Replacement Parts - Sorted by APN (10 of 10)

APN	RPN	ERN	Name and Description Location Reference Figure Replacement Procedure	Procedure Location	Phase Model Option
34YK50C	No ND	—	Test Port K Connector	Covers On External Part	Any Phase MS4642A MS4644A Any Option
34YV50C	No ND	—	Test Port V Connector	Covers On External Part	Any Phase MS4645A MS4647A Any Option
K232B	No ND	—	RF Deck Front Panel RF, LO1, and LO2 Panel K Connector, F-F	Covers Off RF Deck In	Any Phase MS4647A 080, 081

Chapter 3 — Performance Verification

3-1 Introduction to Performance Verification

This chapter provides procedures to be used to verify the performance of the MS4640A VNA.

There are many levels to the concept of VNA “verification” which ultimately is a comparison against expected behaviors.

On the explicit VNA hardware level are operational checkout items such as port power and noise levels.

On the calibrated instrument level (which includes the VNA and the calibration kit or AutoCal Automatic Calibrator) are the residual specifications (corrected directivity, source match, load match, and tracking) which are measured using traceable airlines (absolute impedance standards).

An intermediate level which can look at overall system behavior (VNA, calibration kit, cables, environment) in a traceable fashion is through the use of a verification kit. While not intended for day-to-day use, the verification kit can provide a periodic check on system behavior without going through the rigor needed for full residual analysis (which can usually be done less often).

While there are many ways of verifying VNA performance, sometimes simpler procedures are desired. The use of verification kit, available from Anritsu, is a simpler method of verifying the measurement capabilities of the instrument by analyzing the measurement of artifacts that are traceable to national standards laboratories.

3-2 VNA Traceability and Uncertainty

Vector network analyzers (VNAs) are precision instruments for making high frequency and broadband measurements in devices, components, and instrumentations. The accuracy of these measurements is affirmed by demonstrated and adequate traceability of measurement standards. Metrological traceability, per International vocabulary of metrology, JCGM 200:2008, is property of a measurement result whereby the result can be related to a reference through a documented unbroken chain of calibrations, each contributing to the measurement uncertainty. For the accuracy of VNAs and quality assurance by users, two standard approaches were created to ensure sound metrology traceability. One is to construct tight uncertainty budget and specifications in three tiers from the ground up, and the other is to develop a calibration hierarchy for systematic verification.

The three-tier process is depicted in the sections below.

First Tier of Uncertainty - The VNA Calibration

A traceable VNA itself for coverage from 70 kHz to 70 GHz requires proper calibration for several key quantities, e.g., frequency, power level, and high level noise, via traceable standards to the SI units. Each contributing uncertainty was evaluated at the time of instrument calibration.

The inception of a precision VNA is accuracy-enhanced 50 ohm impedance, which is characterized in lieu of coaxial transmission lines all with proper propagation properties throughout the whole measurement systems including the device-under-test. A transmission line for VNAs is best represented by a coaxial airline, which was precisely selected and machined based on the electromagnetic properties such as conductivity, skin depth, and etc. Therefore, the dimensional measurement accuracy of the airline gives out the first tier of measurement uncertainty of impedance quantity.

Second Tier of Uncertainty - Systematic Measurement Errors

The second tier of uncertainty, corrected or residual uncertainty, is the result of the accuracy enhancement of VNA calibration to remove systematic errors. Systematic measurement errors are components of measurement error that in replicate measurements remains constant or values in a predictable manner. This accuracy enhancement is usually the function of calibration kits. The choice of calibration kits used will dictate the level of uncertainties for the intended measurements or applications.

Third Tier of Uncertainty - Random Measurement Error

The third tier of uncertainty is random measurement error that in replicate measurements varies in an unpredictable manner. The examples are connector repeatability, cable stability, and etc. Random measurement error equals measurement error minus systematic measurement error.

Standards and Verification

Most often instrument end users demand system verifications in order to provide quality check or assurance. This is accomplished by utilizing a set of known or characterized devices, e.g., verification kit, for comparison. It can also be done by using devices that are different from the calibration kit. The calibration hierarchy of verification uncertainty is built through unbroken chain comparisons with the national standards.

- Physical standards → airline dimensionality → impedance standard → residuals and port parameters
- Basic power standards → power sensors → power accuracy specifications
- Basic time standards → frequency reference source → frequency accuracy

3-3 Electrostatic Discharge Prevention

All electronic devices, components, and instruments can be damaged by electrostatic discharge. Thus, it is important to take preventative measures to protect the instrument from damage caused by electrostatic discharge.

Prior to connecting a test port cable to the VNA test port, take steps to eliminate the static charges built-up on the test port cable. This can be done by terminating the open-end of the cable with the short from the calibration kit and then grounding the outer conductor of the connector on the cable.

3-4 Calibration and Measurement Conditions

Extremes in the surrounding environmental conditions and the condition and stability of the test port connectors, through-cable, and calibration kit determine system measurement integrity to a large extent.

These are all user controlled conditions, and as such, should be evaluated periodically for impact on system performance. If these conditions vary significantly with time, the system verification procedures should be performed more often than the recommended annual cycle.

The standard conditions specified below must be observed when performing any of the operations in this chapter – both during calibration and during measurement.

- Warm-up Time:
  - 90 minutes
- Environmental Conditions
  - Temperature
    - For System Verification, 23 °C ± 3 °C, with < 1 °C variation from calibration temperature
    - For other tests, 25 °C ± 5 °C
  - Relative Humidity
    - 20-50% recommended

3-5 Performance Verification

The performance of the MS4640A VNA can be verified using either the System Verification Procedure or the Instrument Key Performance Parameter Verification procedures below.

3-6 System Verification

The System verification procedures verify the measurement capabilities of the VNA, calibration kit, test port cables, and any required adapters as a system by analyzing the measurement of artifacts that are traceable to national standards laboratories. The procedures are automated by using the MS4640A System Verification Software – 3-2300-527, in conjunction with the appropriate Anritsu Calibration and Verification Kits listed in the table below.

Table 3-1. Required Calibration and Verification Equipment

Model	Calibration Kit	Verification Kit	Test Port Cable
MS4642A	3652A-1	3668-1	3670K50-2
MS4644A			
MS4645A	3654D-1	3669B-1	3670V50A-2
MS4647A			

Note The use of non-Anritsu calibration kits or verification kits is not supported.

3-2300-527 Performance Verification Software (PVS)

The MS4640A System 3-2300-527 Performance Verification Software (PVS) compact disc is shipped with each Anritsu Verification Kit listed in Table 3-1 on page 3-3 above. Refer to the software installation instructions on the software compact disc.

The System PVS guides the user to perform a full 12 Term calibration on the VNA using the appropriate calibration kit, measure the S-parameters of the impedance transfer standards in the verification kit, and verify that the measured values are within the specified measurement uncertainty limits.

The impedance transfer standards contained in the verification kit are:

- 20 dB Attenuation Standard
- 40 dB or 50 dB Attenuation Standard (depending on the VNA Model)
- 50 Ohm Air Line Standard
- 25 Ohm Mismatch (Beatty) Standard

For VectorStar VNA verification kit description and component listing, see:

- **3666-1 (3.5 mm), 3668-1 (K), and 3669B-1 (V) Verification Kit Reference Manual – 10410-00285**

The devices in the verification kit are selected based on their ability to stress the envelope of possible measurement parameters while still providing a very stable and repeatable behavior. The key attribute of the devices is that of long term stability.

Verification Result Determination

The software verification process compares the measured S-parameter data of the impedance transfer standards against the original standard (characterization) data for those devices that was obtained using the Factory Standard MS4640A Vector Network Analyzer (at Anritsu).

The Factory Standard MS4640A system is traceable to NIST through the impedance Standards of the Anritsu Calibration laboratory. These standards are traceable to NIST through precision mechanical measurements, NIST-approved microwave theory impedance derivation methods, and electrical impedance comparison measurements.

At each frequency point, the verification measurement is compared to the characterization measurement in the context of the uncertainties. If the delta between the two measurements is consistent with the uncertainty window, the measurement is considered acceptable at that point.

The metric of comparison, termed *En*, is a check to see if the measurement differences are consistent with the uncertainty windows of both the characterization and the verification *measurements*. The quantity is shown in the formula below:

$$E_n = \frac{\left| X_{xy}^{\ char} - X_{xy}^{\ ver} \right|}{\sqrt{(U_{xy}^{\ char})^2 + (U_{xy}^{\ ver})^2}}$$

where:

- The numerator contains the magnitude or phase of S-parameters measured during characterization (by Anritsu) and during verification (by the user).
- The denominator contains the respective uncertainties.

These uncertainties are calculated based on the VNA, the calibration kit, and repeatability. If this quantity *En* is less than 1, then the measurements during the two phases are within the overlap of the uncertainties and one can consider the measurements “equivalent” and, in some sense, verified.

This process is illustrated in Figure 3-1 below. More information is available from the Anritsu metrology department.

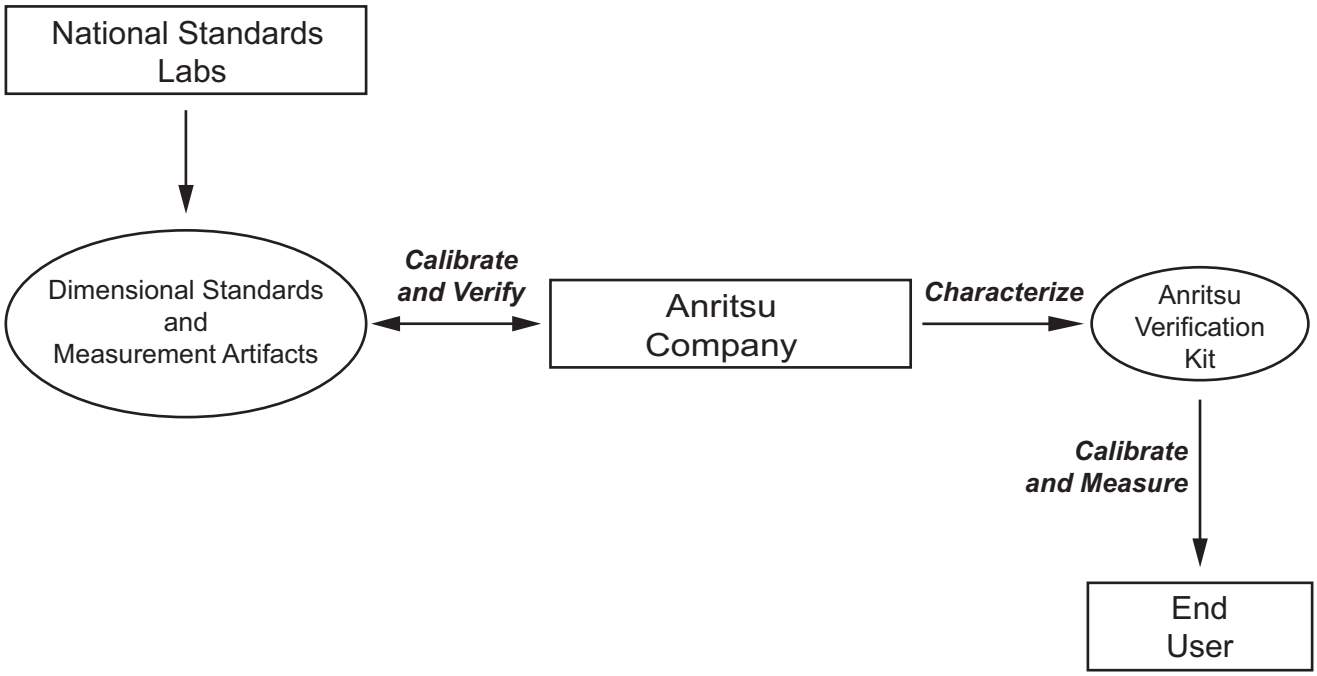

The general process of the creation and use of a verification kit is shown here. A national standards laboratory helps validate the calibration through standards and measured artifacts. At Anritsu Company, these standards and artifacts are used to characterize the components of the verification kit that is sent to the user.

Figure 3-1. Process for Creation and Use of a Verification Kit

The quality of the verification results is very dependent on the degree of care taken by the user in maintaining, calibrating, and using the system. The most critical factors are:

- The stability and quality of the devices in the calibration kit and verification kit.
- The condition of the VNA test port connectors and test port cables.
- The pin depths of all connectors and the proper torquing of connections. These same factors also affect the VNA measurement quality.

Consult the reference manual supplied with Anritsu Calibration Kits and Verification Kits for proper use, care, and maintenance of the devices contained in these kits.

3-7 System Verification Procedure

The System Verification procedure is described below. The procedure assumes that the System Verification Software has been installed to an External Personal Computer with National Instruments GPIB interface running Microsoft Windows operating system.

Note	The **3-2300-527 System Verification Software for VectorStar MS4640A Series VNAs User Guide – 10410-00270** explains in detail the PC requirements and procedures to be used for the operation of the verification software on the Personal Computer.

Equipment Required

- Personal Computer:
  - With Microsoft Windows operating system
  - National Instruments GPIB interface
  - GPIB interface cable
- Anritsu Calibration Kit (Refer to Table 3-1, “Required Calibration and Verification Equipment” on page 3-3)
- Anritsu Verification Kit (Refer to Table 3-1)
- Anritsu Test Port Cables (Refer to Table 3-1)

Special Precautions

When performing the procedures, observe the following precautions:

- Minimize vibration and movement of the system, attached components, and test cables.
- Clean and check the pin depth and condition of all adapters, test port cables, calibration components, and impedance transfer standards.
- Pre-shape the test cables so as to minimize their movement during calibration and measurement activities.

Procedure

1. Using the GPIB interface cable to connect the external computer/controller to the VNA rear panel system GPIB connector. It is the upper GPIB port labeled **IEEE488.2 GPIB**. Do not connect to the lower GPIB port labeled **Dedicated GPIB**.
2. Install the Test Port Cable to **Port 2** of the VNA and then the male to female phase equal insertable from the calibration kit to the open end of the cable.
3. Install the female to female phase equal insertable from the calibration kit to Port 1 of the VNA. This converts Port 1 from a male test port to a female test port.
4. Run the MS4640A System Verification software.
5. Insert the USB memory device (also called a “USB flash drive”) supplied with the verification kit to an available USB port on the external computer/controller. Set the data location of the verification software to the USB memory device when prompted.
6. Follow the directions displayed on the computer to perform calibration with the appropriate calibration kit.
7. Follow the directions on the computer to perform measurements of impedance transfer standards of the appropriate verification kit.
8. Pass/Fail status of the measurements is displayed on the computer. The software can also provide a hard copy printout of the measured data, measurement uncertainties, and the impedance transfer standards used.

9. If the verification fails, check the connectors of the VNA test ports, calibration kit devices, the impedance transfer standards, and test port cables for damage, cleanliness, and proper connection and torquing. Also check the phase stability of the test port cables. These are the most common causes for verification failures.

3-8 Instrument Key Parameter Performance Tests

The Instrument Key Parameter Performance tests verify the key performance parameters of the MS4640A Series Vector Network Analyzers.

Note	**Unwarranted Performance Parameters** Unwarranted performance parameters are not verified by the instrument performance tests as these parameters are not covered by product warranty. Examples of unwarranted performance parameters are those that are designated as nominal, typical and characteristic* (e.g. Receiver Dynamic Range, Receiver Compression Level, Noise Floor at a_x and b_x loop, and etc.). **Characteristic Performance** Characteristic performance indicates a performance designed-in and verified during the design phase. Refer to the latest version of the **VectorStar MS4640A VNA Configuration Guide and Technical Data Sheet – 11410-00432** for warranted instrument specifications.

The Instrument Key Performance tests consist of two parts:

- Automated Performance Tests
- Manual Performance Test - Log Magnitude Dynamic Accuracy Test

Note	The Log Magnitude Dynamic Accuracy Test requires the use of SC3796 step attenuator controller to set the attenuation of the calibrated step attenuator in a manual manner so the test steps must be performed manually.

3-9 Automated Performance Tests

The Automated Instrument Key Performance tests consist of the following:

- Maximum Port Power Output Test
- Port Power Accuracy Test
- Frequency Accuracy Test
- High Level Noise Test
- Noise Floor Test
- Raw Source Match
- Raw Directivity Test

These tests are automated using the MS4640A Series VNA Instrument Test software, part number 2300-531-R, in conjunction with the equipment listed in Table 3-2, “Equipment Required for Automated Test Procedures” on page 3-10 below.

Note	Refer to the **VectorStar MS4640A 2300-531-R Instrument Test Software Quick Start Guide (QSG) – 10410-00291**. The document is included with the latest release of the MS4640A Instrument Test Software for installation instructions, operation, and updated test equipment requirements.

Equipment Required for Automated Tests

Table 3-2. Equipment Required for Automated Test Procedures

Instrument	Critical Specification	Recommended Manufacturer and Model
Frequency Counter	Frequency: 10 MHz Input Impedance: 50 Ohm	Anritsu Model MF2412B
Frequency Reference	Frequency: 10 MHz	Symmetricom Model RubiSource T&M
Power Meter	Power Range: -70 to +20 dBm	Anritsu Model ML2438A
Power Sensor	Frequency: 70 kHz to 70 GHz Connector Type: V	Anritsu Model SC7770
Adapter	Type: N (m) to K (m)	Anritsu Model 34NK50
Adapter	Type: V (f) to K (f)	Anritsu Model 34VFKF50
Adapter	Type: V (f) to V (f)	Anritsu Model 33VFVF50C
Adapter	Type: N (m) to V (m)	Pasternack Model PE9718
Calibration Kit	Connector Type: K	Anritsu Model 3652A or 3652A-1
Calibration Kit	Connector Type: V	Anritsu Model 3654D or 3654D-1
RF Cable	Frequency: DC to 40 GHz Connector Type: K (m) to K (f)	Anritsu Model 3670K50-2
RF Cable	Frequency: DC to 70 GHz Connector Type: V (m) to V (f)	Anritsu Model 3670V50A-2
Coaxial Cable	Type: BNC (m) to BNC (m) Impedance: 50 Ohm Length: 0.6 meter	Any
Computer	PC with Windows7 or Windows XP and National Instruments GPIB hardware and software	Any
GPIB Cable	IEEE 488.2 compliant	Anritsu Part Number 2100-2
PC Keyboard	Interface: PS/2, US English	Any
PC Mouse	Interface: PS/2	Any

Procedures

1. Use the GPIB interface cable to connect the external computer/controller to the System GPIB connector at the **IEEE488.2 GPIB Interface** port on the VNA rear panel. Also connect other required test equipment to the external controller via one or more GPIB interface cables.
2. Run the MS4640A Instrument Test Software.
3. Follow the directions on the computer to perform each test.
4. Pass/Fail status of the measurements are displayed on the computer. The software can also provide a hard copy printout of the measured data.

3-10 Manual Performance – Log Magnitude Dynamic Accuracy Test

This test verifies the measurement accuracy (receiver linearity) of the VNA at power levels that are significantly below 0 dBm.

An external step attenuator that has been accurately characterized for 2 GHz at a calibration lab is required. Measurements are made on each step of the attenuator after a CW 12-Term calibration at 2 GHz with 10 Hz IF Bandwidth has been performed and the VNA has been set to S21 measurement mode. The reference power level is at –10 dBm. Characteristic VNA uncertainty and uncertainty associated with the step attenuator are part of the criteria used in the Pass or Fail determination for each attenuation step.

Equipment Required

Table 3-3. Required Equipment for Log Magnitude Dynamic Accuracy Test

Instrument	Critical Specification	Recommended Manufacturer and Model
Adapter *Required only for MS4645A and MS4647A VNAs*	Type: V (f) to K (f) Quantity: 2	Anritsu Model 34VFKF50
Calibration Kit	Connector Type: K	Anritsu Model 3652A-1
RF Cable	Frequency: DC to 40 GHz Connector Type: K (m) to K (f)	Anritsu Model 3670K50-2
Step Attenuator	With traceable Characterization Data at 2 GHz	Anritsu Model SC7974
Step Attenuator Control Box	—	Anritsu Model SC3796

Procedure

1. Warm up the VNA for at least an hour.
2. Connect adapters, cable and USB Memory Device as shown one of the two figures below.
   - Use the configuration shown in Figure 3-2 on page 3-12 below for MS4642A and MS4644A VNAs.
   - Use the configuration shown in Figure 3-3 on page 3-13 below for MS4645A or MS4647A VNAs.

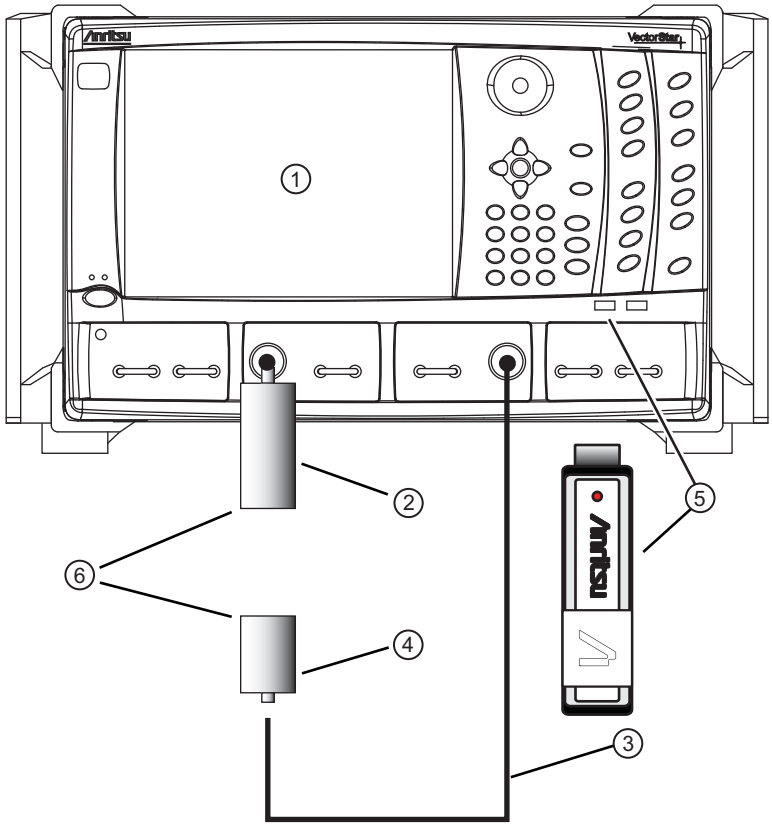

1. Anritsu VectorStar MS4642A or MS4644A VNA	4. Anritsu 33KKF50B Adapter from 3652A Calibration Kit
2. Anritsu 33KFKF50 Adapter from 3652A Calibration Kit	5. USB Memory Device from 3652A Calibration Kit
3. Anritsu 3670K50-2 Cable	6. Insert calibration standards here

Figure 3-2. Test Setup for MS4642A and MS4644A VNAs

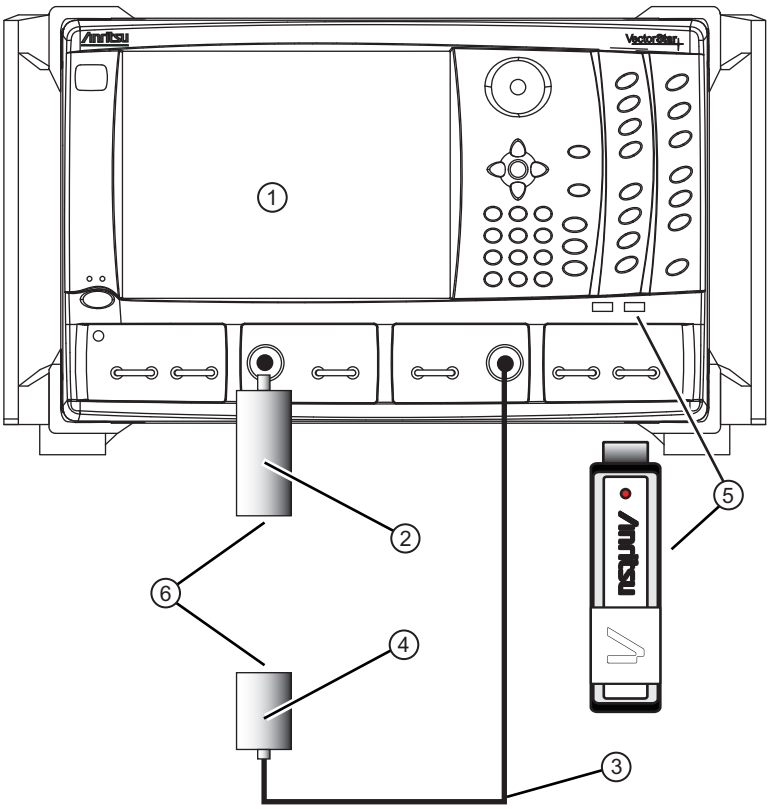

MS4645A / MS4647A Test Setup	
1. Anritsu VectorStar MS4645A or MS4647A VNA	4. Anritsu 33KK50B Adapter from 3652A Calibration Kit
2. Anritsu 34VFKF50 Adapters	5. USB Memory Device from 3652A Calibration Kit
3. Anritsu 3670K50-2 Cable	6. Insert calibration standards here

Figure 3-3. Test Setup for MS4645A and MS4647A VNAs

3. Press the **Preset** key on the front panel and select the **OK** button to continue. This resets the VNA to default factory setting.

4. Set up the VNA as follows:

- **a.** Press the **Frequency** key on the front panel and set Start Frequency to 2 GHz.
- **b.** Set CW Mode to On.
- **c.** Set # of Points to 10.
- **d.** Press the **Avg** key on the front panel
- **e.** Set IFBW to 10 Hz.
- **f.** Set Averaging Factor to 1024 and then select Averaging to turn it On.

5. Install the Calibration Kit Component coefficients as follows:

- **a.** Press the **Calibration** key on the front panel.
- **b.** Select Cal Kit/AutoCal Characterization.
- **c.** Select Install Kit/Charac.

d. Select Cal Kit on the dialog box.

e. Click on the Browse… button. Browse to the Removable Disk (E:). Select the `.ccf` file and then click on the Open button to load the data.

6. Perform a 12-Term calibration as follows:

a. Press the **Calibration** key on the front panel.

Manual Calibration Menu

b. Select Calibrate and then Manual Cal.

c. Select 2-Port Cal.

d. Select Modify Cal Setup and then Edit Cal Param.

e. Change Test Port 1 DUT Connector to the **K (m) connector** and Test Port 2 DUT Connector to the **K (f) connector**. Click on the OK button to close the dialog box.

f. Click on the Back icon on the bottom of the Right Side Menu to return to the previous menu.

Port 1 Reflective Devices

g. Select Port 1 Reflective Devices.

h. Connect the **24K50 Open** from the **3652A Calibration Kit** to the female end of the adapter at Port 1. Select Open to measure the calibration standard. A check mark will appear on the Open button when the measurement is complete.

i. Disconnect the **24K50** and then connect the **23K50 Short** to the female end of the adapter at Port 1. Select Short to measure the calibration standard. A check mark will appear on the Short button when the measurement is complete.

j. Disconnect the **23K50** and then connect the **28K50A Load** to the female end of the adapter at Port 1. Select Load to measure the calibration standard. A check mark will appear on the Load button when the measurement is complete. Leave the **Load** connected to Port 1.

k. Click on the Back icon on the bottom of the Right Side Menu to return to the previous menu.

Port 2 Reflective Devices

l. Select Port 2 Reflective Devices.

m. Connect the **24KF50 Open** from the **3652A Calibration Kit** to the open end of the adapter on the cable connected to Port 2. Select Open to measure the calibration standard. A check mark will appear on the Open button when the measurement is complete.

n. Disconnect the **24KF50** and then connect the **23KF50 Short** to the open end of the adapter on the cable connected to Port 2. Select Short to measure the calibration standard. A check mark will appear on the Short button when the measurement is complete.

o. Disconnect the **23KF50** and then connect the **28KF50A Load** to the open end of the adapter on the cable connected to Port 2. Select Load to measure the calibration standard. A check mark will appear on the Load button when the measurement is complete. Leave the Load connected to the open end of the adapter on the cable connected to Port 2.

p. Click on the Back icon on the bottom of the Right Side Menu to return to the previous menu.

Isolation (Optional)

q. Select Isolation (Optional).

r. Select Isolation 1-2 to measure both calibration standards. A check mark will appear on the Isolation 1-2 button when the measurements are complete.

s. Click on the Back icon on the bottom of the Right Side Menu to return to the previous menu.

t. Disconnect both **Loads**.

u. Connect the open end of the **through cable** at Port 2 to Port 1.

v. Select Thru/Recip and then Thru 1-2 to start the thru measurement. A check mark will appear on the Thru 1-2 button when the measurement is complete.

w. Click on the Back icon on the bottom of the Right Side Menu to return to the previous menu.

x. Select Done to complete the calibration.

Setup Display

7. Set up the Display as follows:

a. Press the **Trace** key on the front panel.

b. Select Trace Max to expand the S11 Smith Chart to fill the screen.

c. Select Trace Next twice so S21 Data is displayed on screen.

d. Press the **Display** key on the front panel.

e. Select Trace Format Log Mag+Phase.

f. Select Log Mag.

g. Press the **Marker** key on the front panel.

h. Select Mkr1 [OFF]. This will turn Marker 1 On.

Step Attenuator Control Box

8. Set all four switches on the **SC3796 Step Attenuator Control Box** to 0 dB.

9. Install the ribbon cable connector plug of the step attenuator to the DIP socket of the **SC3796 Step Attenuator Control Box**.

Warning	The white dots and/or beveled connector corners designate Pin 1 on the ribbon cable connector plug of the step attenuator and the DIP socket of the SC3796 Step Attenuator Control Box. The Pin 1 dot or beveled corner MUST be aligned together to prevent damage to the step attenuator.

10. Disconnect the **through cable** from Port 1 and then install the **step attenuator** between Port 1 and the Port 2 through cable.

Set 0 dB Attenuation

11. Record the M1 value on the display to 0 dB row on Table D-1, “Measured S21 Values and Calculated Step Attenuator Attenuation Values” on page D-2 in Appendix D, “Test Record”.

Set 10 dB Attenuation

12. Set the first switch on the most right to 10 dB position to set the step attenuator to 10 dB attenuation. Refer to Figure 3-3, “Test Setup for MS4645A and MS4647A VNAs” on page 3-13 above.

13. Record the M1 value on the display to 10 dB row on Table D-1.

14. Set the switch from 10 dB back to 0 dB position.

Set 20 dB Attenuation

15. Toggle the second switch from the right to 20 dB position to set the step attenuator to 20 dB attenuation.

16. Record the M1 value on the display to 20 dB row on Table D-1.

Set 30 dB Attenuation

17. Toggle the first switch to 10 dB position to set the step attenuator to 30 dB attenuation.

18. Record the M1 value on the display to 30 dB row on Table D-1.

19. Set both switches (10 dB and 20 dB) back to 0 dB position.

Set 40 dB Attenuation

20. Toggle the third switch from the right to 40 dB position to set the step attenuator to 40 dB attenuation.

21. Record the M1 value on the display to 40 dB row on Table D-1, "Measured S21 Values and Calculated Step Attenuator Attenuation Values" on page D-2.

Set 50 dB

22. Toggle the first switch to 10 dB position to set the step attenuator to 50 dB attenuation.

23. Record the M1 value on the display to 50 dB row on Table D-1.

24. Set the first switch from 10 dB position to 0 dB position.

Set 60 dB

25. Toggle the second switch to 20 dB position to set the step attenuator to 60 dB attenuation.

26. Record the M1 value on the display to 60 dB row on Table D-1.

Set 70 dB

27. Toggle the first switch to 10 dB position to set the step attenuator to 70 dB attenuation.

28. Record the M1 value on the display to 70 dB row on Table D-1.

29. Set both the first and second switches (10 dB and 20 dB) back to 0 dB position.

Set 80 dB

30. Toggle the last switch to 40 dB position to set the step attenuator to 80 dB attenuation.

31. Record the M1 value on the display to 80 dB row on Table D-1.

Set 0 dB

32. Set all switches on the SC3796 Control Box back to 0 dB position.

33. Repeat Step #11 to Step #32 nine more times. Record the M1 value to the next available column on Table D-1.

Calculate Attenuation Values

34. Calculate the attenuation values for the 10, 20, 30, 40, 50, 60, 70, and 80 dB attenuation steps of the Step Attenuator using the following formula:

$$\textit{Attenuation (x dB)} = \textit{Measured Value (x dB)} - \textit{Measured Value (0 dB)}$$
$$\textit{Where x} = \textit{Attenuation step (e.g. 10 dB, 20 dB, etc.)}$$

35. Calculate the mean values by summing the 10 calculated values in the previous steps and then divide the sum by 10 for each attenuation step of the Step Attenuator using the following formula:

$$\textit{Attenuation (x dB)}_{mean} = \frac{[\textit{Attenuation (x dB)}_{pass1} + \textit{Attenuation (x dB)}_{pass2} + \ldots + \textit{Attenuation (x dB)}_{pass10}]}{10}$$

36. Record the calculated mean values to Table D-1.

Analysis of the Measurement

37. Open the characterization data file (using a text editor program such as Windows™ Notepad) on the Characterization Disk of the step attenuator on a personal computer and copy the eight characterization values to Column B in Table D-2, "Attenuation Calculated Upper Limits, Mean Values, Lower Limits, and Pass/Fail" on page D-3,

Note	The data for each attenuation step is found on the same line as the nominal attenuation value. For example, assume the line reads "–10 = –10.02,0.05". Copy "–10.02" to Column B in Table D-2 on page D-3. Do not record the value of "0.05", which is the uncertainty of that attenuation step.

38. In Table D-2, add the values of Column B to Column C to compute the values for the Upper Limit. Record the computed values in Column D.

- Column B + Column C = Upper Limit = Column D

39. In Table D-2, subtract the values of Column C from Column B to compute the values for Lower Limit. Record the computed values in Column F.

- Column B – Column C = Lower Limit = Column F.

Note	The uncertainty values in Column C of Table D-2 on page D-3 in Appendix D, "Test Record" are derived values that are a composite of the uncertainty of the VNA and the uncertainty of the step attenuator.

40. Transfer the mean values of each attenuation step of the step attenuator from the worksheet in Table D-1 to Column E of Table D-2 on page D-3.

Test Pass/Fail

41. If the mean value in Column E falls between the values of Column D (Upper Limit) and Column F (Lower Limit), the test passes.

42. If the mean value in Column E is outside the Upper and Lower limits, the test fails.

If the Test Fails

43. If the test fails, do the following:

- Check connections of adapters, cable and VNA port connectors are tightened with sufficient torque.
- Re-do the test after performing a new 12-Term calibration.
- Check if the S21 Noise Floor is out of specification. If it is outside the specification, correct the Noise Floor issue prior to re-doing this test.
- Replace IF Band module.

3-11 Automated Performance Test Descriptions

This section provides a brief description of each automated performance test.

Note	These automated performance tests are subject to change so the test descriptions provided are for reference only. Refer to the latest release of the MS4640A Instrument Test Software for the latest list of tests and their descriptions.

The automated tests described in the sections below are:

- Maximum Port Power Output Test
- Port Power Accuracy Test
- Frequency Accuracy Test
- High Level Noise Test
- Noise Floor Test
- Raw Source Match and Raw Directivity Test

3-12 Maximum Port Power Output Test

This test verifies that the VNA ports are capable of outputting the maximum rated power.

Measurements are made with a power sensor connected to Port 1 and then Port 2. The MS4640A VNA is set to a CW frequency and the port power is stepped above the specified Maximum Rated Port power for each frequency.

Equipment Required

- Power Meter
- Power Sensor
- Adapters

Procedure

Note	The Instrument Test Software supports automated tests. The manual procedure below provides a detailed description of the instrument test steps.

1. Preset the VNA.
2. Configure the VNA for default power and set the VNA source for “CW” mode.
3. Set # of points to 51 and set Display to S11 Log Magnitude only.
4. Connect power sensor to Port 1.
5. Set the VNA to the first frequency in the test list, step the output power up until the level stops increasing, drop the level by 0.5 dB, measure and record the power at the port. Refer to Table 3-4, “Test Frequency List for Maximum Rated Power Test and Level Accuracy Test” on page 3-26 below for the test frequency list.
6. Repeat for remaining frequency points on the test frequency list.
7. Set Display to S22 Log Magnitude only.
8. Connect power sensor to Port 2.
9. Repeat Step #5 through Step #6.

If the Test Fails

10. If this test fails, do the following:
    - Perform Source Auto Leveling Control Adjustment
    - Perform the steps in Section 4-13 “Troubleshooting RF Section – Power-Related Problems” on page 4-23 in Chapter 4, “Troubleshooting”.

3-13 Port Power Accuracy Test

This test verifies that the port power level accuracy at default port power.

Power accuracy is determined with an external power meter. Accuracy is evaluated at default power across frequency.

Measurements are made with a power sensor connected to port 1 and then port 2. The MS4640A is set to CW mode and default power. The frequency is then stepped across the entire frequency band of the instrument.

Equipment Required

- Power Meter
- Power Sensor
- Adapters

Procedure

1. Preset the VNA.
2. Configure the VNA for default power and set the VNA source for “CW” mode.
3. Set # of points to 51 and set Display to S11 Log Magnitude only.
4. Connect power sensor to port 1.
5. Set the VNA to the first frequency in the test frequency list, measure and record the port output power.
    - Refer to Table 3-4, “Test Frequency List for Maximum Rated Power Test and Level Accuracy Test” on page 3-26 below for the frequencies list.
6. Repeat for remaining frequency points on the test frequency list.
7. Set Display to S22 Log Magnitude only.
8. Connect power sensor to Port 2.
9. Repeat Step #5 through Step #6.

If the Test Fails

10. If this test fails, do the following:
    - Perform Source Auto Leveling Control Adjustment
    - Perform the steps in Section 4-13 “Troubleshooting RF Section – Power-Related Problems” on page 4-23. The section is located in Chapter 4, “Troubleshooting”.

3-14 Frequency Accuracy Test

This test verifies the frequency accuracy of the source in the MS4640A. Frequency accuracy is determined with a Frequency Counter with its external reference linked to a high precision 10 MHz Timebase.

Equipment Required

- Frequency Counter
- Precision 10 MHz Timebase
- Test Cable
- Adapters

Procedure

1. Preset the VNA.
2. Configure the VNA for default power and set the VNA source for “CW” mode.
3. Set # of points to 51 and set Display to S11 Log Magnitude Only.
4. Connect Port 1 to a **frequency counter** with a test cable and adapter.
5. A series of frequencies in the 1 to 20 GHz band are checked as shown in Table 3-5, “Test Frequency List for Frequency Accuracy Test” on page 3-26 below.

If the Test Fails

6. If this test fails, do the following:
   - Perform 10 MHz Frequency Reference Adjustment
   - Replace RF Source Module

3-15 High Level Noise Test

This test verifies that the high level noise (trace noise) performance of MS4640A meets specifications.

Note	Skip this test if the VectorStar VNA is equipped with Option 051, 061, or 062 installed.

This is a measure of the scatter of data when measuring a high level signal (full reflect or transmission through a short transmission line). The measurement is performed at default power with a 1 kHz IFBW and IFBW Enhancer set to ON.

A minimum of 20 sweeps of data of the desired parameter in linear magnitude and phase are acquired after trace-math normalization. At each frequency point the population-based standard deviation is computed and this forms the RMS high level noise number. For magnitude, this is normally converted back to Log Magnitude.

The results for this test are measured for both Magnitude and Phase in both sweep directions.

Equipment Required

- Adapter
- Through Cable

Procedure

1. Connect a female to female adapter to Port 1 and a through cable to Port 2.
2. Preset the instrument.
3. Configure the instrument for default power and transmission measurements (S21 and S12).
4. Set IFBW to 1 kHz and Display to Linear Magnitude and Phase.
5. Set # of Points to 51 and the first frequency band listed below:
   - **a.** 0.07 to 0.499 MHz
   - **b.** 0.5 to 2499 MHz
   - **c.** 2500 to 5000 MHz
   - **d.** 5001 to 20000 MHz
   - **e.** 20001 to 40000 MHz
   - **f.** 40001 to 67000 MHz
   - **g.** 67001 to 70000 MHz
6. Normalize the trace (data divided by memory).
7. Take trace data 40 times and calculate the RMS value of the band being tested.
8. Repeat Step #5 through Step #7 for the rest of the frequency band listed. The equation for this is:

$$\textit{RMS value for each frequency point} = \left\{ \frac{(X-Y)^2}{N} \right\}$$

$$\textit{where } X = x1, x2, x3 \ldots xn$$

$$Y = \textit{mean}$$

$$N = 40 \textit{ sweep count}$$

If the Test Fails

9. If the test fails, do each of the following until the test passes:

- **a.** Repeat the High Level Noise Test.
- **b.** Replace the thru line and repeat the entire High Level Noise Test
- **c.** Verify the Port Power Accuracy Test and then repeat the High Level Noise Test
- **d.** Perform LO Cal and then repeat the High Level Noise Test.
- **e.** Replace the Source Module and then repeat the High Level Noise Test
- **f.** Replace the LO Module and then repeat the High Level Noise Test

3-16 Noise Floor Test

The test verifies the noise floor performance of the VNA receivers at Port 1 and Port 2. This is a measure in absolute power (dBm) of the noise floor of the system referenced to the test port. This is done by measuring S21 and S12 with a short thru line connected and the port power set to –10 dBm. The cable loss is compensated by performing a Port Power Cal at the end of the cable. The traces are normalized with this through in place and no leakage correction is applied. The ports are then terminated with loads and S21 and S12 measured when in a 10 Hz bandwidth with no averaging. A minimum of 10 sweeps are acquired in linear magnitude mode and the RMS value is computed at each frequency point individually. The results are then converted back to Log magnitude and are expressed in RMS values.

Equipment Required

- Adapters
- Through Cable
- Loads

Procedure

1. Preset the VNA.
2. Set IFBW to 10 Hz.
3. Connect a **through cable** to Port 1 and then set Display to S21 and Linear Magnitude.
4. Set Port 1 Power to –10 dBm.
5. Set # of Points to 2001.
6. Perform a 2-port transmission-only calibration.
7. Disconnect the cable from Port 2. Terminate both the cable and Port 2 with loads from the calibration kit.
8. Take trace data 20 times and calculate RMS value for each point with sample size 20.
9. Calculate the Noise Floor using the formula below:

$$Noise\ Floor\ =\ RMS\ per\ point + (-10\ dBm)$$
$$since\ by\ definition\ it\ references\ to\ 0\ dBm.$$

Note	All the calculations are handled in linear form and final result is converted to dBm.

10. Set Display to S12 and Linear Magnitude.
11. Repeat Step #8 through Step #9 above.

If The Test Fails

12. If this test fails, do the following:
    - Check all RF cable connections in the RF Deck
    - Check the Test Port Adapter connections at the front panel for proper tightness.

3-17 Raw Source Match and Raw Directivity Test

This test verifies the uncorrected (Raw) Port characteristics of the VNA.

Note	Skip this test if the instrument is equipped with either Option 051, 061, or 062.

The measurement data for Raw Source Match and Directivity is gathered by the extraction of error correction terms from the Reflection Only Calibration done at the port being measured.

Equipment Required

- Calibration Kit
- PC with GPIB interface
- GPIB Interface cable

Procedure

1. Connect a GPIB interface cable between **IEEE488.2 Port** of the VNA to the PC GPIB interface.
2. Preset the VNA.
3. Set up the VNA for segmented sweep mode for all the specified frequency bands.
4. Perform 2-port Reflection-Only Calibration (Do not include Isolation). This generates six error correction terms (coefficients).
5. Send GPIB commands (OC1, OC2, OC3, OC4, OC5 and OC6) to retrieve the respective values for:
   - Port 1 Directivity (ED1)
   - Port 1 Source Match (EP1S)
   - Port 1 Reflection Tracking (ET11)
   - Port 2 Directivity (ED2)
   - Port 2 Source Match (EP2S)
   - Port 2 Reflection Tracking (ET22)
6. Calculate the Raw Port Match and Raw Directivity as follows:

$$\begin{aligned} \textit{Port 1 Raw Source Match} &= \textit{EP1S} \\ \textit{Port 1 Raw Directivity} &= \textit{ED1/ET11} \\ \textit{Port 2 Raw Source Match} &= \textit{EP2S} \\ \textit{Port 2 Raw Directivity} &= \textit{ED2/ET22} \end{aligned}$$

Note	All error correction terms are in real-imaginary format. After the calculation has been done in complex form, convert the result to dB format.

If The Test Fails

7. If this test fails, do the following:
   - Check the Test Port Adapter connection at the front panel.
   - Perform a new calibration and re-test.
   - Replace Test Port Adapter
   - Replace Test Coupler

Table 3-4. Test Frequency List for Maximum Rated Power Test and Level Accuracy Test

Frequency (MHz)	Frequency (MHz)	Frequency (MHz)	Frequency (MHz)
0.07	18000	37000	56000
50	19000	38000	57000
1000	20000	39000	58000
2000	21000	40000	59000
3000	22000	41000	60000
4000	23000	42000	61000
5000	24000	43000	62000
6000	25000	44000	63000
7000	26000	45000	64000
8000	27000	46000	65000
9000	28000	47000	66000
10000	29000	48000	66699
11000	30000	49000	67000
12000	31000	50000	68000
13000	32000	51000	69000
14000	33000	52000	70000
15000	34000	53000	—
16000	35000	54000	—
17000	36000	55000	—

Table 3-5. Test Frequency List for Frequency Accuracy Test

Frequency (MHz)	Frequency (MHz)	Frequency (MHz)	Frequency (MHz)
1000	3000	7500	20000
1800	4000	10000	—
2500	5000	10001	—
2501	5001	15000	—
17000	36000	55000	—

Chapter 4 — Troubleshooting

4-1 Introduction to Troubleshooting

This chapter provides information about troubleshooting aids, tests and techniques for identifying system failures.

A good understanding of the system and sub-assembly operation is an important aid to troubleshooting instrument failures. Refer to the descriptions of system and sub-assembly operation, and block diagrams located in Chapter 6, “Theory of Operation”.

Accurately defining a fault is the most important step in troubleshooting a Vector Network Analyzer instrument. Faults can be categorized as the following:

- Hardware problems
- Software problems
- Measurement problems

4-2 General Safety Warnings

Many of the troubleshooting procedures presented in this chapter require the removal of instrument covers to gain access to sub-assemblies and modules. When using these procedures, please observe the warning and caution notices.

Warning	Hazardous voltages are present inside the instrument when AC line power is connected. Before removing any covers or panels, turn off the instrument via the Main power switch on the rear panel after Windows has completed its shut down process.

Caution	Many assemblies in the MS4640A contain static-sensitive components. Improper handling of these assemblies may result in damage to the assemblies. Always observe the static-sensitive component handling precautions.

Caution	Some modules and assemblies such as the 5-20 GHz Doubler module or the Sampler/LO Distribution Assembly can be damaged by applying RF power to their inputs when their outputs are not terminated. Always follow the disassembly procedures closely when working around these components.

4-3 Equipment Damage Warning

Caution	The A10 PCB contains model configuration data which is unique to each instrument. The replacement board is pre-configured at the Factory for the targeted instrument. DO NOT install the A10 PCB on a different instrument. If a VectorStar A10 DSP Module is removed and installed in any other VectorStar VNA, the data in the module’s non-volatile memory will be corrupted.

4-4 Test Equipment

The recommended test equipment for troubleshooting is listed in Table 1-1, “Recommended Test Equipment” on page 1-8, in Chapter 1.

4-5 Troubleshooting Aids and Test Procedures

This section provides information about the aids available in the VectorStar Application software and the troubleshooting test procedures. They include:

- Error Messages
- Self Test
- Power Supply Voltage Check
- Non Ratio Power Level Check

4-6 Troubleshooting with Error Message

Some system malfunctions cause the VectorStar Application software to display a message in the status bar area of the display as shown below in Figure 4-1. Typical status bar messages and the possible fault and/or remedy is listed below the figure in Table 4-1.

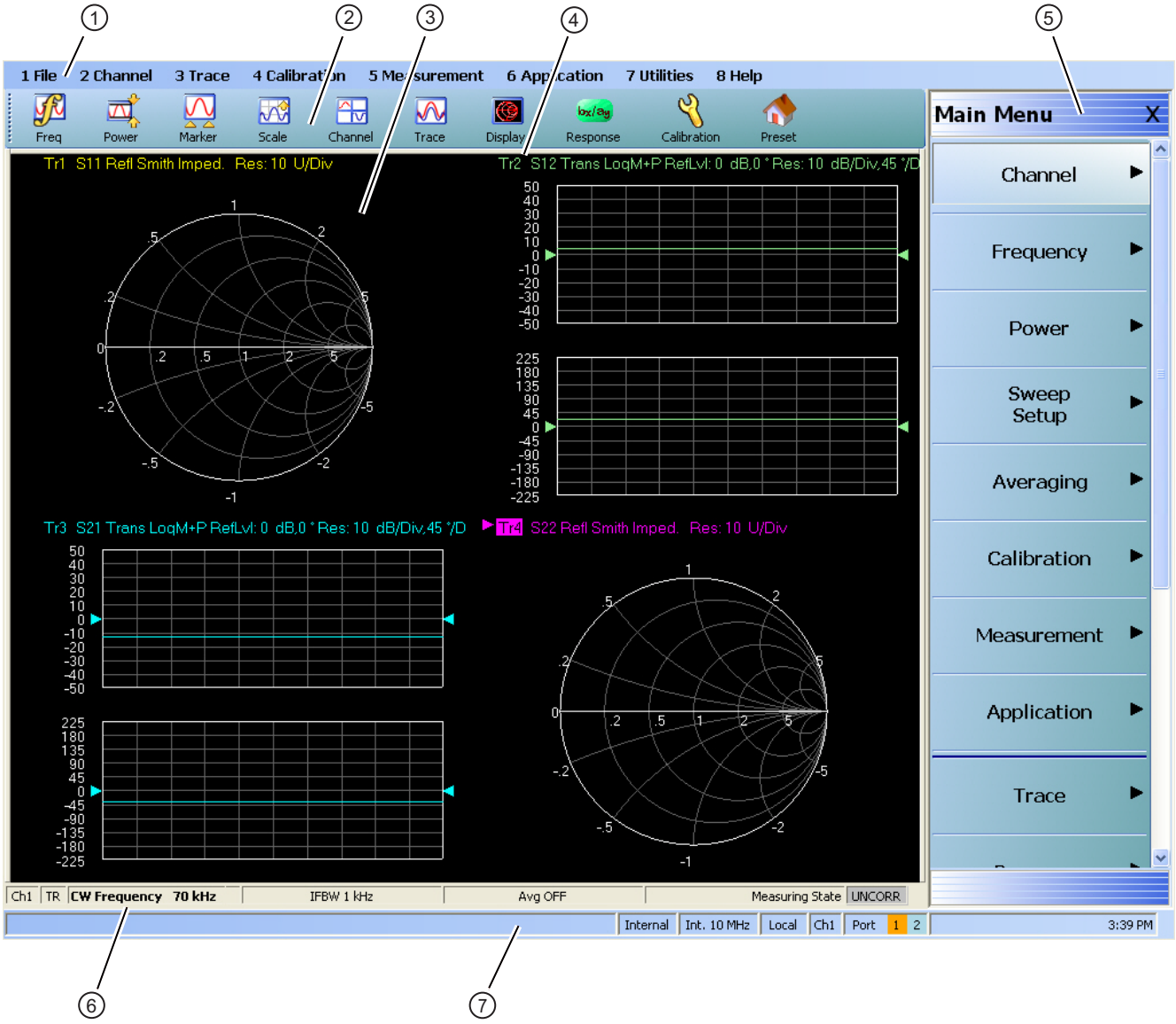

1. Menu Bar Interface	5. Application Menu Title for MAIN MENU with buttons below
2. User-Defined Icon Bar Interface	6. Channels status information for Channel #1 (Ch1)
3. Main Measurement Display showing One Channel and Four Traces	7. Instrument Status Bar at bottom of screen and location of some instrument error messages.
4. Trace Identification Label for Trace #2 (Tr2)	

Figure 4-1. Main Display Status Bar Location

Table 4-1. Status Bar Error Messages

Message	Description	Possible Faults/Remedies
Lock Error “A”	Direct Digital Synthesis Reference Unlocked	• Timebase Reference signal lost • RF Source Module failed
Lock Error “B”	Heterodyne Local Oscillator Unlocked	• Timebase Reference signal lost • RF Source Module failed
Lock Error “C”	Offset Local Oscillator Unlocked	• Timebase Reference signal lost • RF Source Module failed
Lock Error “D”	Offset Source Unlocked	• Timebase Reference signal lost • RF Source Module failed
Lock Error “E”	Main Local Oscillator Unlocked	• Timebase Reference signal lost • RF Source Module failed
Lock Error “F”	Main Source Unlocked	• Timebase Reference signal lost • Source Module failed
Lock Error “H”	Heterodyne Source Unlocked	• Timebase Reference signal lost • Source Module failed
RF Power Unlevel	Unleveled RF Power	• Port power set too high; reduce port power • Level Detector failed (High band) • RF Source Module failed
Auto IF Cal Failed	Automatic IF Calibration Failed	• IF Band Module failed
Unknown Lock Error	Lock Error Status flag set but failure could not be identified	• RF Source Module failed • Level Detector failed (High band)
Power Up Self Test Failed	Self Test Failed	• Run Triggered Self Test

4-7 Troubleshooting with Self Test

The self test performs a series of tests that verify that various internal MS464XA circuits are functional and operating properly. There are two self tests:

- Power Up Self Test
- Triggered Self Test

Power Up Self Test

Power Up Self Test is performed when the instrument is powered on. Triggered Self Test is performed when it is triggered by the user via the front panel. Both Power Up Self Test and Triggered Self Test verify the following MS464XA circuits:

- Source
- Analog IF
- DSP/PC
- RF deck Control

Triggered Self Test

The Triggered Self Test performs additional tests for the Source and DSP/PC circuits.

Note	Allow the system to warm up for at least 90 minutes prior to performing Triggered Self Test.

To start the Triggered Self Test, do the following:

1. Use the Menu Bar at the top of the display.
2. Select MENU BAR | Utilities | UTILITIES Drop-Down Menu | System.
    - Alternatively from the right-side application menus, MAIN MENU | System | SYSTEM.

3. The right side SYSTEM menu appears.

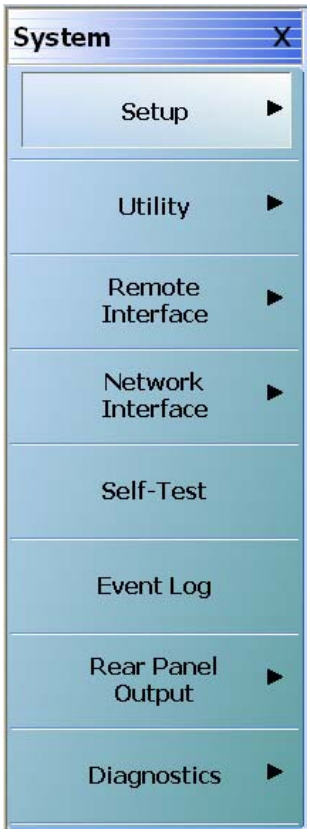

Figure 4-2. SYSTEM Menu

4. Select the Self-Test button. The SELF TEST dialog box appears.

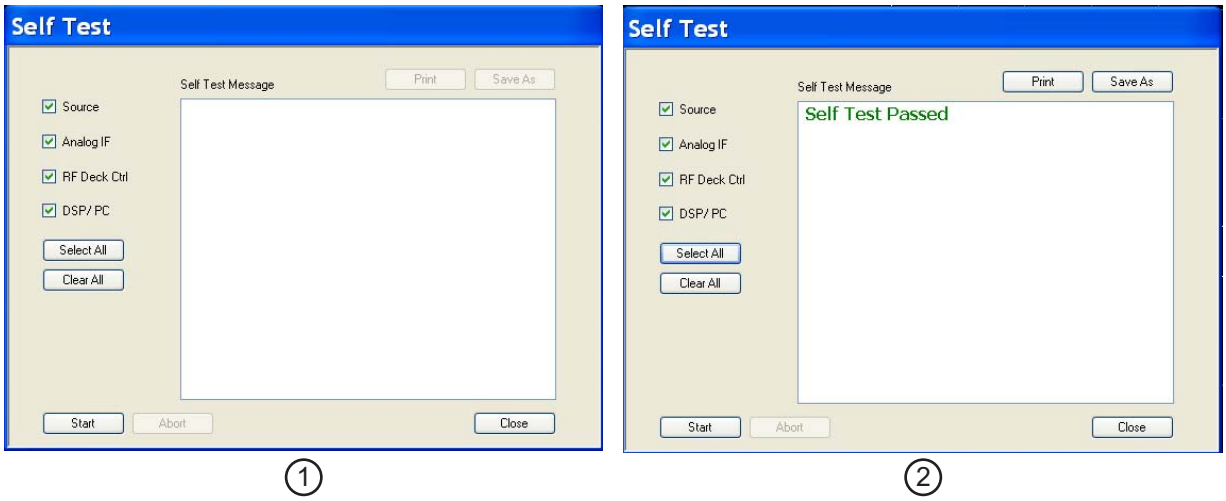

1. SELF TEST dialog box before test at left.	2. SELF TEST dialog box after test at right.

Figure 4-3. SELF TEST Dialog Box Before and After Test

5. Select all check boxes:
   - Source
   - Analog IF
   - RF Deck Ctrl
   - DSP/PC
6. Click Start to begin the initial self-test process.
7. If the test is successful, the Self Test Passed message is displayed.
8. If the test fails, detailed test results are displayed. Refer to Table 4-2 below for the solutions of the failures.

Table 4-2. Self Test Failure Faults

Self Test Failure Faults	Fault Reason
Source	RF Source Module failed
Analog IF	IF Band Module failed
RF Deck Ctrl	RF Component Control PCB failed
DSP/PC	DSP Module failed

9. Click Close to exit the dialog box.

4-8 Troubleshooting with Power Supply Voltage Check

This procedure verifies whether the correct power supply voltages are present at the Power Control connector (P93) and Power Supply input connector (P94) on the Motherboard 2 PCB Assembly – ND70070 – 61923-3.

Note	P93 and P94 connectors are located near the front panel assembly.

Warning	Hazardous voltages are present inside the instrument when AC line power is connected. Turn off the instrument and remove the line cord before removing covers. Troubleshooting or repair procedures should only be performed by service personnel who are fully aware of the potential hazards.

Procedure

1. Toggle the rear panel **Main AC Switch** to **OFF**. Disconnect the AC line cord from the MS4640A. Ensure that all external connections to the instrument front and rear panel are also disconnected, except the loop cables supplied with Options 051, 061 or 062.

Remove Case and Add Blocking

2. Remove the Outer Cover.
   - In Chapter 7, see Section 7-5 “Common - Remove Outer Cover” on page 7-10.
3. Position the instrument so that it is right-side up, RF deck down.
4. Add a spacer at least 5 cm (~2”) thick under the front of the unit, approximately 10 cm (~4”) in from the instrument front.
   - The spacer should be at least 50 mm (~20”) long.
   - The spacer creates clearance for the Front Panel Loops.
   - A ~50 cm (~20”) length of lumber “2 by 2” provides a perfect spacer.

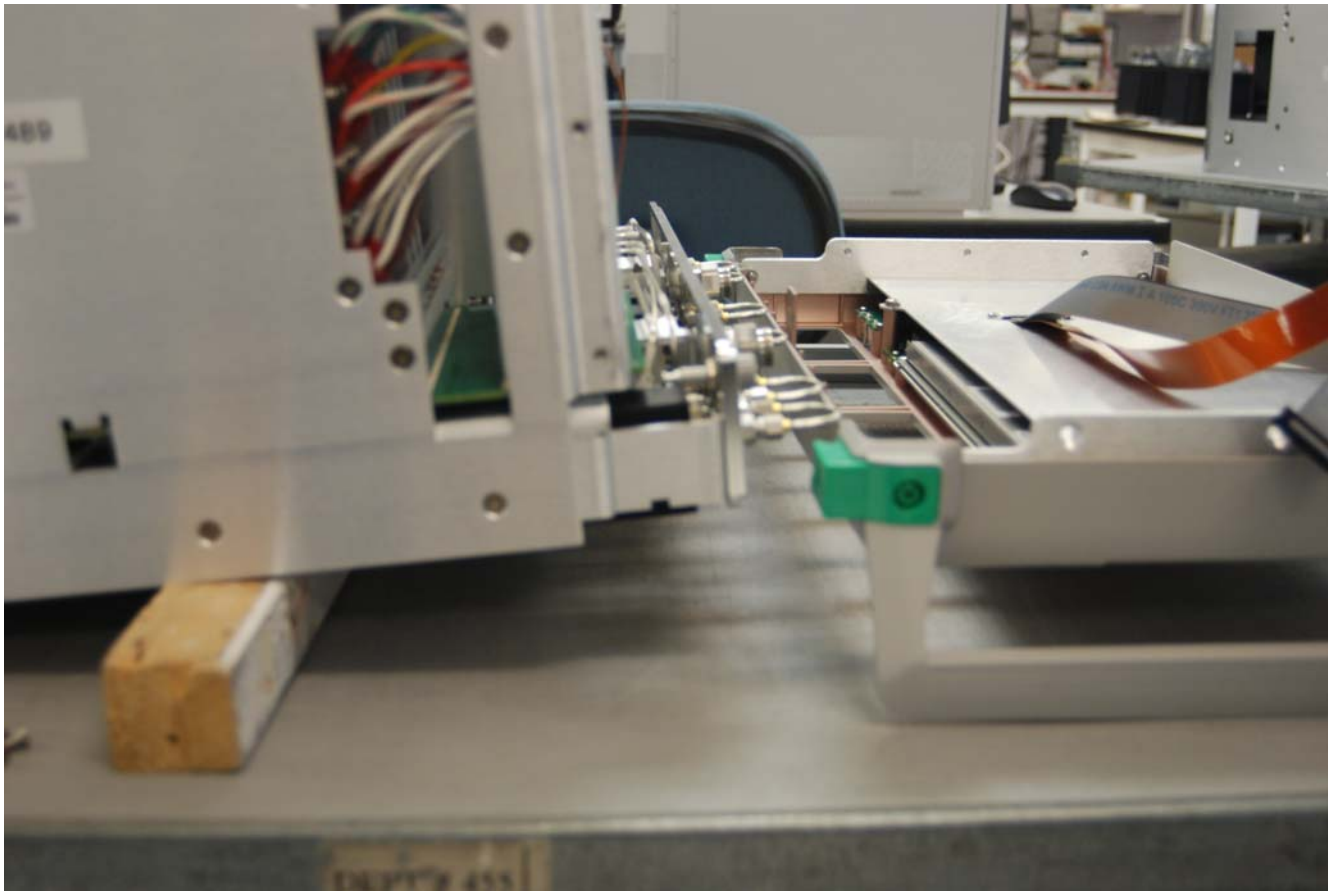

Figure 4-4. Blocking Under Instrument with Cover and Front Panel Off

Remove Front Panel

5. Remove the Front Panel.
   - See Section 10-3 “Remove the Phase 1 Front Panel Assembly” on page 10-3.
6. Remove the three (3) screws on each side that secure the Front Panel, six (6) total.
7. Remove the Front Panel from the instrument and carefully lay it with the LCD side facing downward.
   - Ensure that no stress is put on the **Front Panel Flexible PCB Cable**.
   - Excess stress can damage the **Flexible PCB Cable**.
   - Keep the Front Panel and Chassis on the same centerline with ±2.5 cm (±1 inch) of each other.
8. Reconnect the AC line cord to the instrument. Toggle the rear panel **Main AC Switch** to **ON**.

Motherboard 2 PCB Assembly P93 and P94 Connectors

9. On the Motherboard 2 PCB, locate the **P93 Power Supply Control Connector** and the **P94 Power Supply In Connector** as shown below in Figure 4-5.

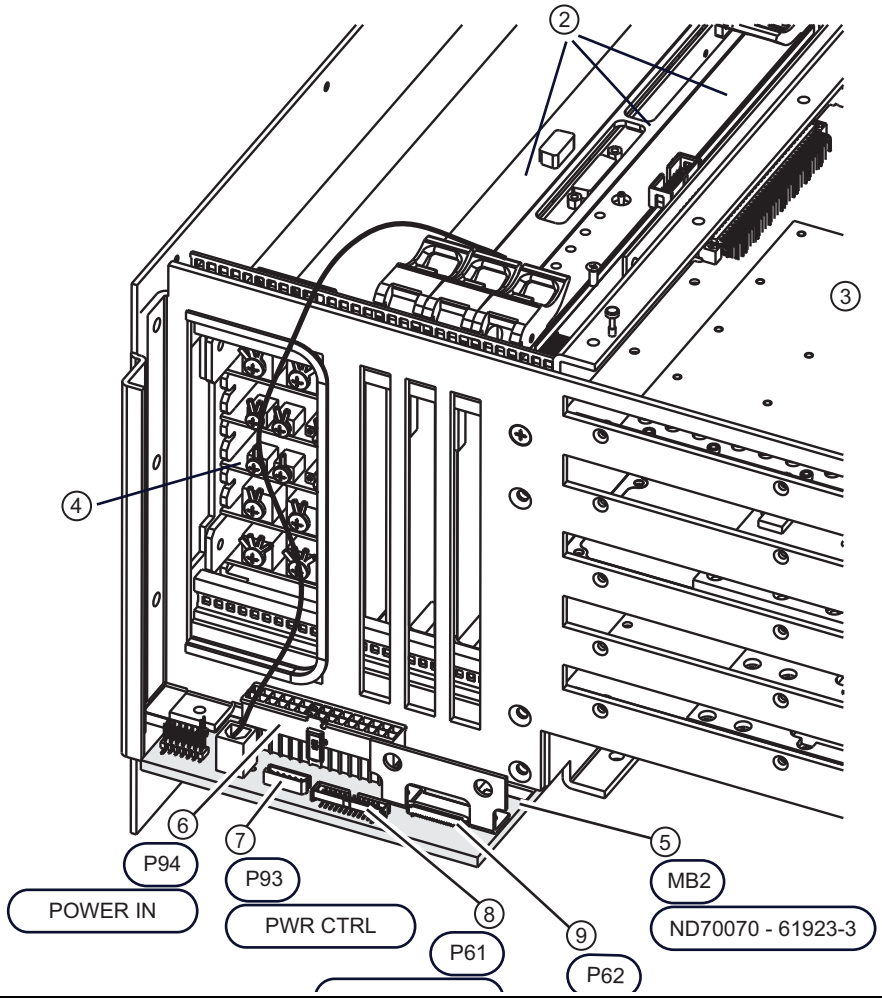

Figure 4-5. Motherboard 2 PCB Assembly P93 and P94 Connectors – Phase 1 Example (1 of 2)

General	Motherboard 2 PCB Power Connectors
1. Front Panel location, removed here.	6. P94 Power In Connector – On MB2 PCB.
2. Top Side Digital PCB Assemblies – A3, A4, A6, A7, A8, A10	7. P93 Pwr Ctrl (Power Control) Connector - On MB2 PCB.
3. Right Side Analog Module Assemblies – A11, A13, A15	**Phase 1 Motherboard 2 PCB Front Panel Connectors**
4. Power Supply Module Front End Power Harness Connectors	8. P61 Front Panel Power Connector – For gray ribbon cable on Front Panel.
5. Motherboard 2 PCB Assembly – Mounted horizontally below the card cages and above RF Deck (not shown).	9. P62 Front Panel Signal Connector – For gold Flex PCB cable on Front Panel.

Figure 4-5. Motherboard 2 PCB Assembly P93 and P94 Connectors – Phase 1 Example (2 of 2)

10. The figures below show a close up plan view of the MB2 P93 and MB2 P94 Connectors for Phase 1 and Phase 2 MB2 PCBs.

- Figure 4-6, “P93 and P94 Power Connectors – Phase 1 Motherboard 2 PCB Assembly” on page 4-12
- Figure 4-7, “P93 and P94 Power Connectors – Phase 2 Motherboard 2 PCB Assembly” on page 4-13

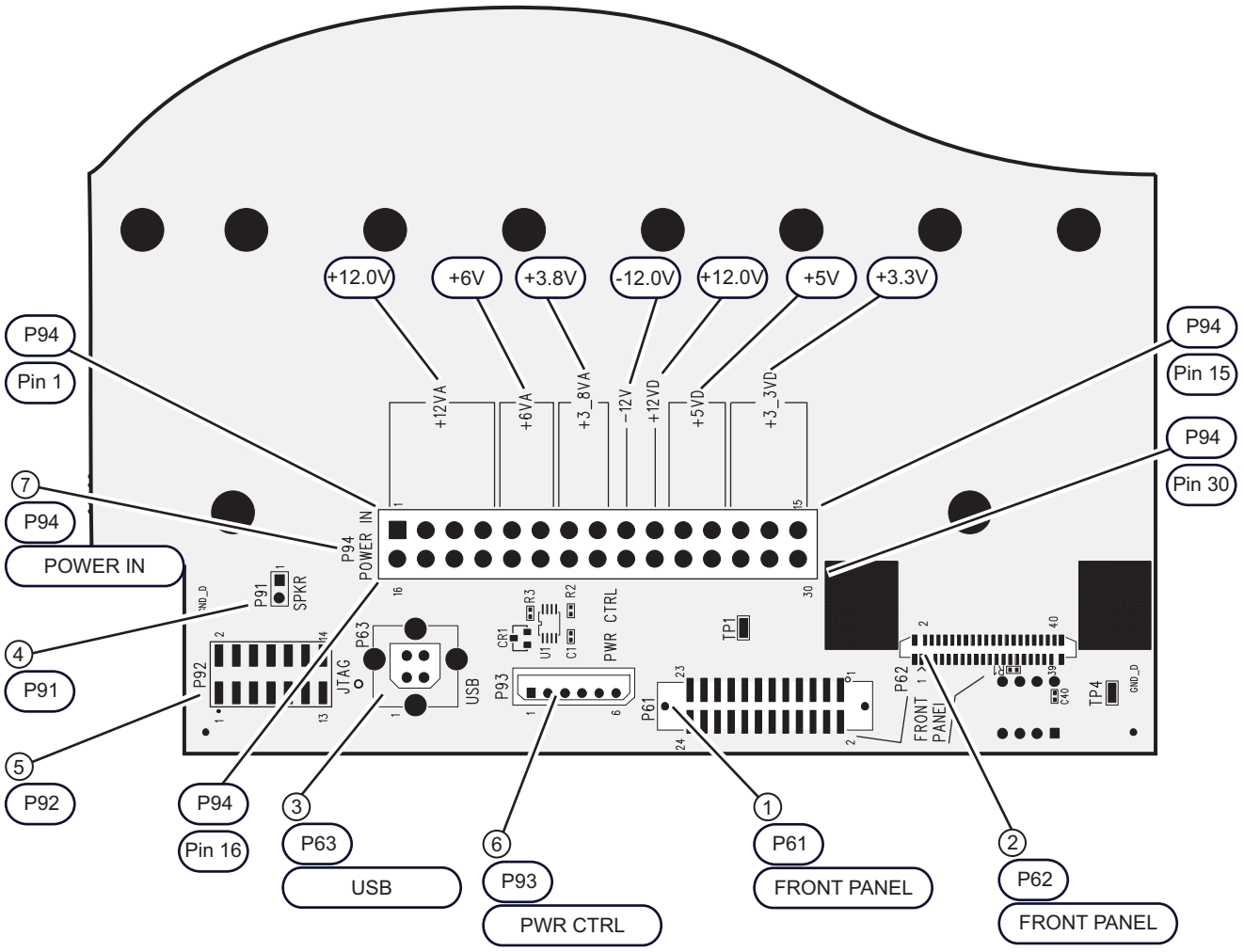

1. P61 – Ribbon Cable Connector to Front Panel	P94 – Connector Pin 1
2. P62 – Ribbon Cable Connector to Front Panel	P94 – Connector Pin 15
3. P63 – USB Type A Connector	P94 – Connector Pin 16
4. P91 – Speaker – Not used	P94 – Connector Pin 30
5. P92 – JTAG – Not used	
6. P93 – Power Control Connector to Power Supply	
7. P94 – Power In Connector to Power Supply	

Figure 4-6. P93 and P94 Power Connectors – Phase 1 Motherboard 2 PCB Assembly

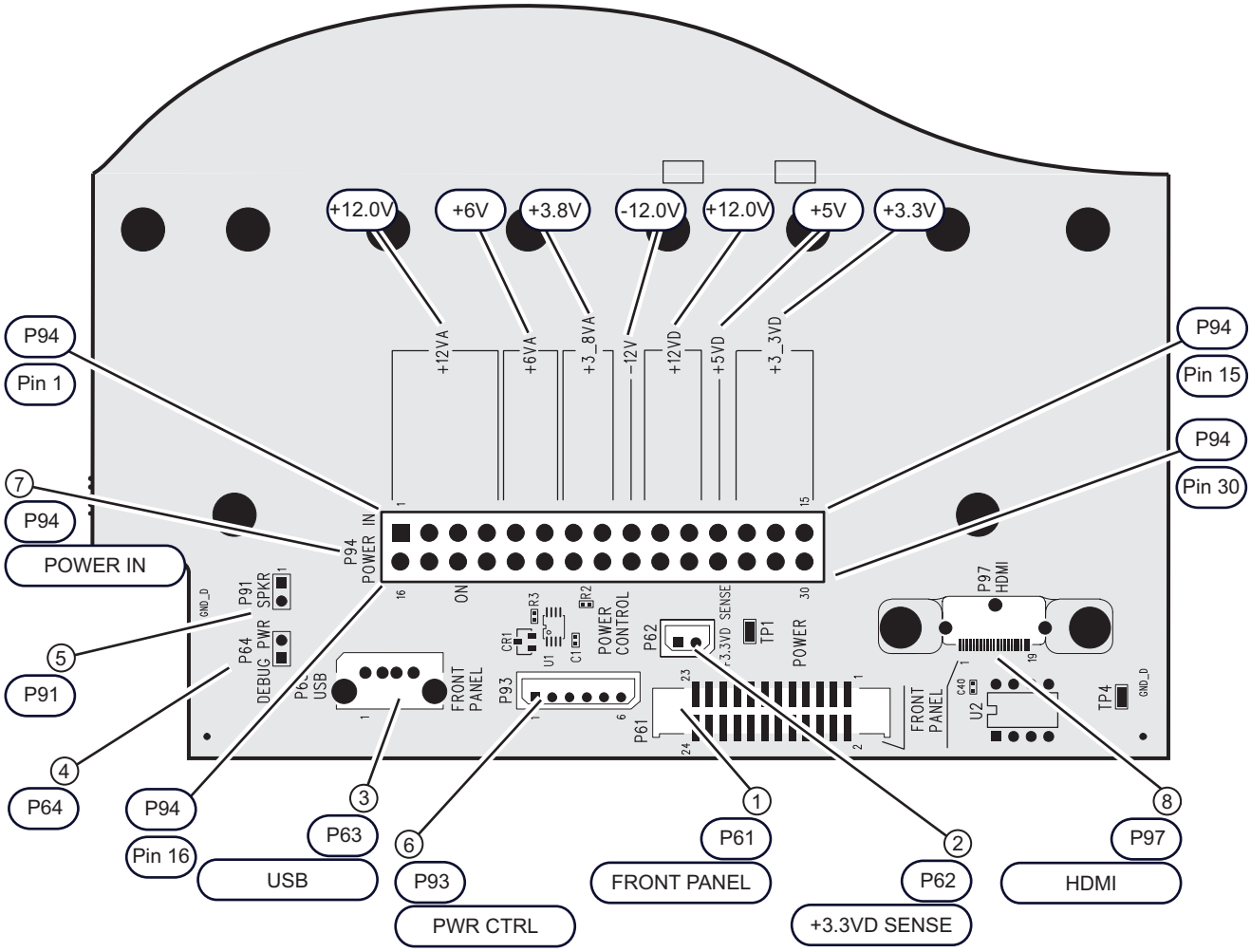

1. P61 – Ribbon Cable Connector to Front Panel	P94 – Connector Pin 1
2. P62 – +3.3 VDC Sense Connector to Power Supply Module	P94 – Connector Pin 15
3. P63 – USB Type A Connector to Front Panel	P94 – Connector Pin 16
4. P64 – Debug Power – Not used	P94 – Connector Pin 30
5. P91 – Speaker – Not used	
6. P93 – Power Control Connector to Power Supply	
7. P94 – Power In Connector to Power Supply	
8. P97 – HDMI Connector to Front Panel	

Figure 4-7. P93 and P94 Power Connectors – Phase 2 Motherboard 2 PCB Assembly

Front Panel Standby Voltage Check

11. Using a DMM or an oscilloscope, measure the **Front Panel Standby Voltage** between **Pin 4** and **Pin 5** on **P93** as shown below. Verify that **+5 V** is present. The schematic for the P93 Connector is shown below in Figure 4-8.

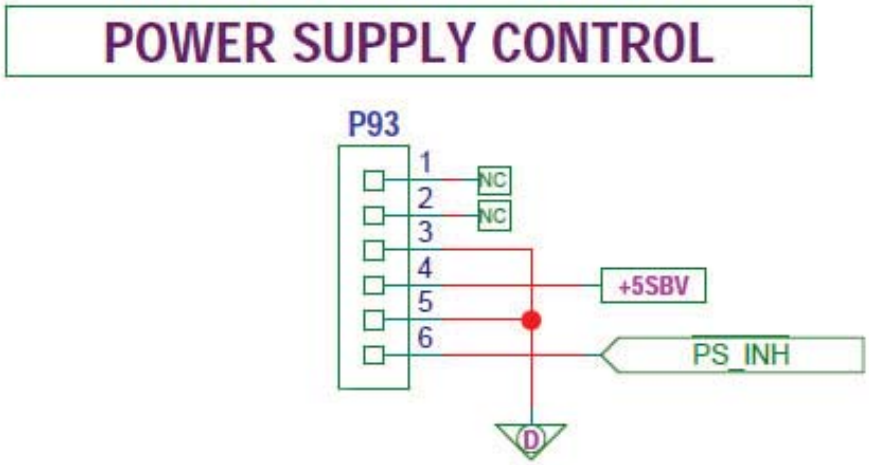

Figure 4-8. Schematic – P93 Power Supply Control Connector – Front Panel Standby Voltage

Power Supply DC Voltage Check

12. Press the front panel On/Off switch until its light changes from yellow to green and then release.

13. At the P4 Connector, using a DMM or an oscilloscope, measure the **DC voltages** listed below.

- Use Table 4-3, “Phase 1 VNA P94 Power Supply Voltage Check” on page 4-15 for Phase 1 VNAs.
- Use Table 4-4, “Phase 2 VNA P94 Power Supply Voltage Check” on page 4-15 for Phase 2 VNAs.

Table 4-3. Phase 1 VNA P94 Power Supply Voltage Check

Measurement Pin	Common Pin	Expected DC Voltage (V dc)
1	18	+12.0
5	18	+6.0
7	18	+3.8
9	18	–12.0
10	18	+12.0
11	18	+5.0
13	18	+3.3

Table 4-4. Phase 2 VNA P94 Power Supply Voltage Check

Measurement Pin	Common Pin	Expected DC Voltage (V dc)
1	18	+12.0
5	18	+6.0
7	18	+3.8
9	18	–12.0
10	18	+12.0
12	18	+5.0
13	18	+3.3

4-9 Non-Ratio Power Level Check

This procedure checks the IF power level of each individual receiver. It does not require measurement calibration of the system. It requires that you press specified front panel keys, or use a mouse to make choices from the displayed menus and is valid for all instrument model and option combinations.

Procedure

1. Connect Test Ports 1 and 2 together using a high-quality through line.
2. At the top of the display, select MENU BAR | Utility | UTILITY Drop-Down Menu | System. The right-side SYSTEM menu appears.
3. Click Setup. The SETUP menu appears.
4. Click Preset Setup. The PRESET SETUP menu appears.
5. Select Default.

Note	The default setting associates both the front panel **Preset Key** and the **MENU BAR | Utilities | UTILITIES Drop-Down Menu | Preset** command with the factory-default preset configuration.

Reset the VNA

6. Reset the VNA by pressing the front panel **Preset Key**.
7. The VNA resets to the factory-default as-shipped configuration.
8. The right-side menu returns to the MAIN MENU.
9. At the top of the display, select MENU BAR | Utilities | UTILITIES Drop-Down Menu | System.
10. The right side SYSTEM menu appears.
11. On the right-side, select SYSTEM | Utility | UTILITY | Factory Receiver Cal and toggle the Factory Receiver Cal button to **OFF**.
12. At the top of the display, select MENU BAR | Channel | CHANNEL Drop-Down Menu | Power. The right side POWER menu appears.
13. Click on the Port 1 Power button.
14. In the displayed field toolbar, enter **–10.0000 dBm**.
15. Click the X at the end of the toolbar to close it.

Format Trace #1

16. Select the upper left LCD trace (Trace #1) using the mouse by clicking on Tr1 S11 Refl Smith Imped.

Note	The trace name has additional resolution and unit information appended to the displayed label.

17. On the icon toolbar, select the DISPLAY icon. The right side DISPLAY menu appears.
18. Click the Trace Format button, the TRACE FORMAT menu appears.
19. Select **Log Mag**.
20. On the icon toolbar, select the Response icon. The RESPONSE menu appears.
21. Click on User-Defined, the USER DEFINED menu appears.
22. Click on Numerator and on the NUMERATOR menu, set it to **A1**.
23. Click on Denominator and on the DENOMINATOR menu, set it to **1**.
24. Set Driver Port to **Port 1**.

Format Trace #3

25. Select the lower left trace (Trace #3) by clicking trace label that starts with Tr3 S21 Trans LogM + P Refl.

Note	The trace name has additional resolution and unit information appended to the displayed label.

26. On the icon toolbar, select the DISPLAY icon. The right side DISPLAY menu appears.

27. Click on the Trace Format button, the TRACE FORMAT menu appears.

28. Select **Log Mag**.

29. On the icon toolbar, select the Response icon. The RESPONSE menu appears.

30. Click on User-Defined, the USER DEFINED menu appears.

31. Click on Numerator and on the NUMERATOR menu, set it to **B2**.

32. Click on Denominator and on the DENOMINATOR menu, and set it to **1**.

33. Set Driver Port to **Port 1**.

Format Trace #2

34. Select the upper right LCD channel using the mouse by clicking on Tr2 S12 Trans Log M&P.

Note	The trace name has additional resolution and unit information appended to the displayed label.

35. On the icon toolbar, select the DISPLAY icon. The right side DISPLAY menu appears.

36. Click on the Trace Format button, the TRACE FORMAT menu appears.

37. Select **Log Mag**.

38. On the icon toolbar, select the RESPONSE icon. The right side RESPONSE menu appears.

39. Click on User-Defined, the USER DEFINED menu appears.

40. Click on Numerator and on the NUMERATOR menu, and set it to **A2**.

41. Click on Denominator and on the DENOMINATOR menu, set it to **1**.

42. Set Driver Port to **Port 2**.

Format Trace #4

43. Select the lower right channel by clicking on Tr4 S22 Refl Smith Imped.

Note	The trace name has additional resolution and unit information appended to the displayed label.

44. On the icon toolbar, select the DISPLAY icon. The right side DISPLAY menu appears.

45. Click on the Trace Format button. The TRACE FORMAT menu appears.

46. Select Log Mag.

47. On the icon toolbar, select the RESPONSE icon. The right side RESPONSE menu appears.

48. Click on User-Defined, the USER DEFINED menu appears.

49. Click on Numerator and on the NUMERATOR menu, and set it to **B1**.

50. Click on Denominator and on the DENOMINATOR menu, and set it to **1**.

51. Set Driver Port to Port 2.

52. Observe whether any power level abnormalities appear in the frequency band of interest on the displayed traces. Refer to Table 4-5 for the frequency band of interest for each receiver.

Table 4-5. Frequency Band of Interest for Each VNA Receiver

VNA Model Number	Frequency Band of Interest	A1 (Port 1)	A2 (Port 2)	B1 (Port 1)	B2 (Port 2)
All	≤ 2.5 GHz	**YES**	**YES**	**YES**	**YES**
All	2.5 GHz to 5 GHz	**YES**	**YES**	NO	NO
All	5 GHz to 20 GHz	**YES**	**YES**	NO	NO
MS4642A and MA4644A	20 GHz to 40 GHz	**YES**	**YES**	NO	NO
MS4645A and MS4647A	20 GHz to 38 GHz*	**YES**	**YES**	NO	NO
All	38 GHz to 70 GHz	**YES**	**YES**	NO	NO
All	2.5 GHz to 70 GHz	NO	NO	**YES**	**YES**

53. Refer to Section 4-13 “Troubleshooting RF Section – Power-Related Problems” on page 4-23 for further troubleshooting instructions.

4-10 Hardware Problems

This section provides specific procedures to be followed when troubleshooting hardware problems. While performing these procedures, always observe the warnings and cautions in the Introduction section of this chapter.

To use the troubleshooting procedures in this section:

1. Select the paragraph heading that best describes the nature of the MS464XA VNA system fault. The troubleshooting analysis sections below and their flowcharts cover the following topics:
   - Section 4-11 “Troubleshooting Power-Up Problems” on page 4-20
     - Figure 4-9, “Flow Chart for Troubleshooting Power-Up Problems” on page 4-20
   - Section 4-12 “Troubleshooting Boot-Up Problems” on page 4-21
     - Figure 4-10, “Flow Chart for Troubleshooting Boot-Up Problems” on page 4-21
   - Section 4-13 “Troubleshooting RF Section – Power-Related Problems” on page 4-23
     - Figure 4-11, “Flow Chart for Troubleshooting RF Section Problems – Start – Part 1 of 7” on page 4-23
     - Figure 4-12, “Flow Chart for Troubleshooting RF Section Problems - Link A – Part 2 of 7” on page 4-24
     - Figure 4-13, “Flow Chart for Troubleshooting RF Section Problems - Link B – Part 3 of 7” on page 4-25
     - Figure 4-14, “Flow Chart for Troubleshooting RF Section Problems - Link C – Part 4 of 7” on page 4-26
     - Figure 4-15, “Flow Chart for Troubleshooting RF Section Problems - Link D – Part 5 of 7” on page 4-27
     - Figure 4-16, “Flow Chart for Troubleshooting RF Section Problems - Link E – Part 6 of 7” on page 4-28
     - Figure 4-17, “Flow Chart for Troubleshooting RF Section Problems - Link F – Part 7 of 7” on page 4-29
   - Section 4-14 “Troubleshooting Frequency Related Problems” on page 4-30
   - Section 4-15 “Troubleshooting Front Panel Problems” on page 4-31
   - Section 4-16 “Troubleshooting Rear Panel Problems” on page 4-32
   - Section 4-17 “Troubleshooting Software Problems” on page 4-33
   - Section 4-18 “Troubleshooting Measurement Problems” on page 4-34
2. Perform the procedure contained in the selected paragraph. In general, the steps within each procedure should be followed in the order presented.
3. When removing and replacing the various assemblies and components specified by the troubleshooting procedures in this chapter, refer to Chapter 7, Removal and Replacement Procedures, as necessary.
4. If a step cannot be successfully completed, stop, correct the immediate problem, and then continue on to the next step until all the appropriate steps in the procedure are completed.
5. After troubleshooting and correcting a problem, perform the procedures in Chapter 5, “Adjustment Procedures” and Chapter 3, “Performance Verification”, as appropriate. This should be done to insure that the VNA system has been fully and correctly restored to proper operation.

4-11 Troubleshooting Power-Up Problems

If the instrument is non-functional when power-up is attempted, refer to Figure 4-9 below

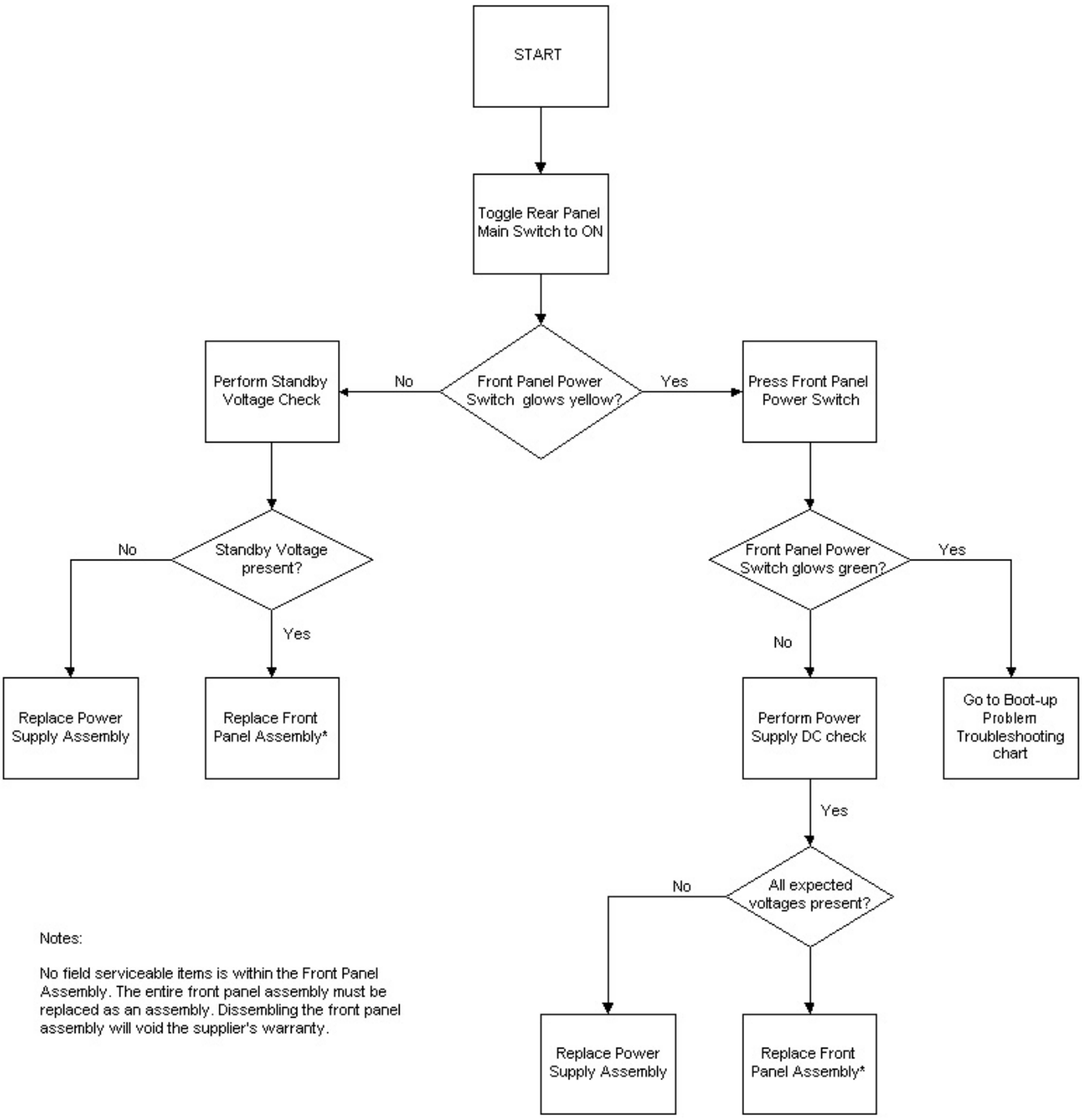

Figure 4-9. Flow Chart for Troubleshooting Power-Up Problems

4-12 Troubleshooting Boot-Up Problems

If the instrument is non-functional during the boot-up process, refer to Figure 4-10 below.

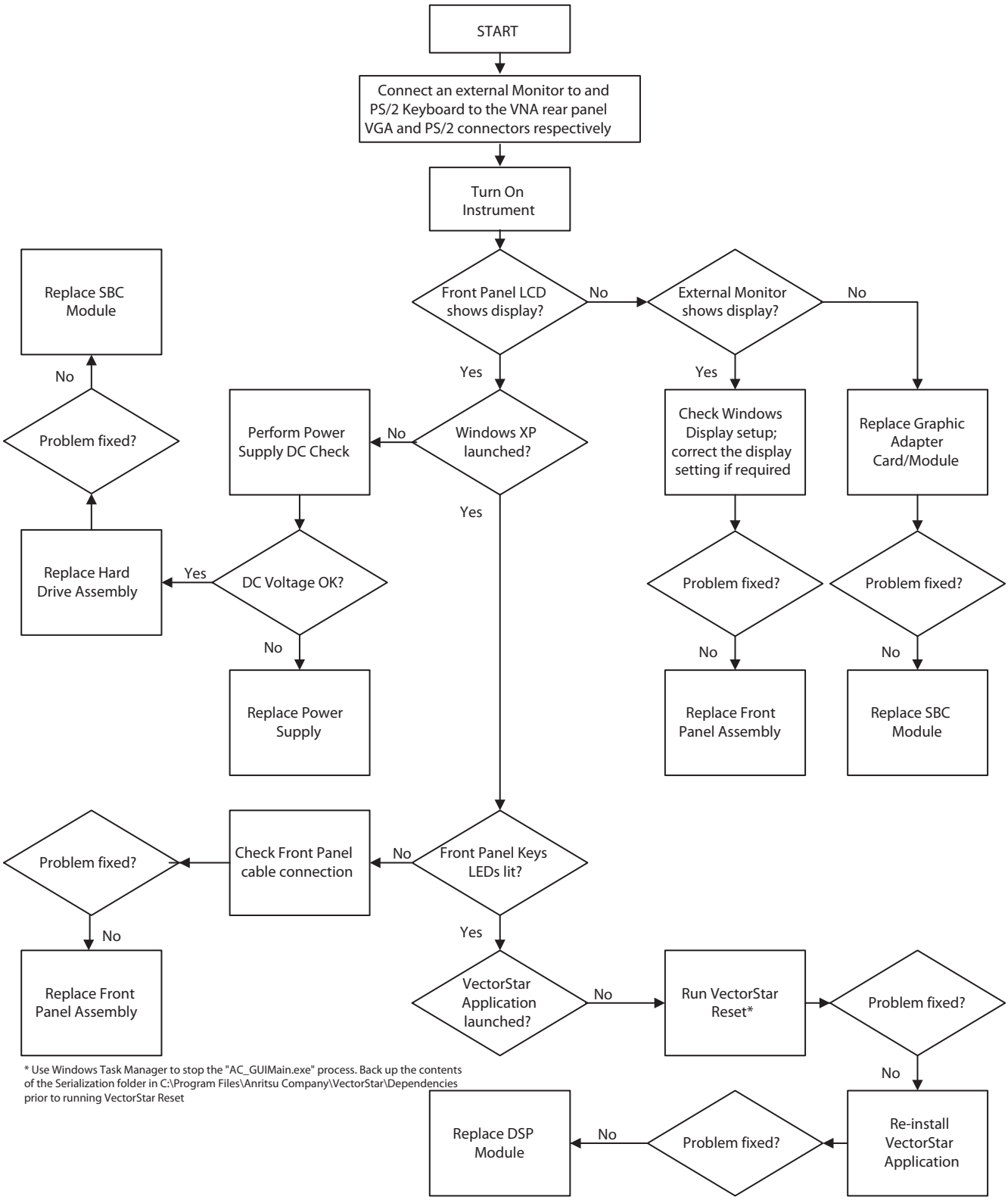

Figure 4-10. Flow Chart for Troubleshooting Boot-Up Problems

4-13 Troubleshooting RF Section – Power-Related Problems

If the instrument exhibits power related problems, refer to the linked flowcharts below in Figure 4-11 through Figure 4-17 which are for troubleshooting RF Section problems.

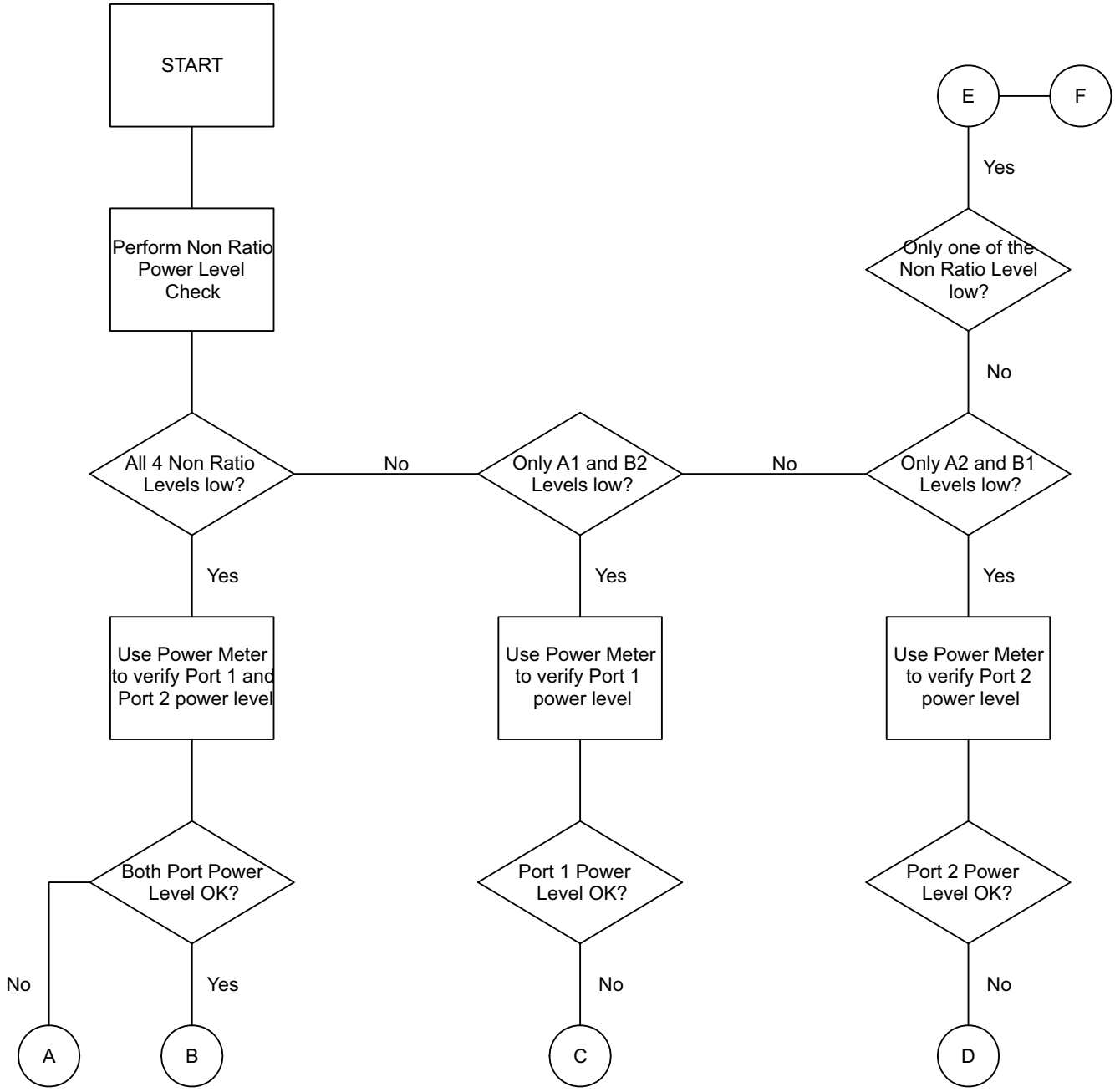

A = Figure 4-12, “Flow Chart for Troubleshooting RF Section Problems - Link A – Part 2 of 7” on page 4-24
B = Figure 4-13, “Flow Chart for Troubleshooting RF Section Problems - Link B – Part 3 of 7” on page 4-25
C = Figure 4-14, “Flow Chart for Troubleshooting RF Section Problems - Link C – Part 4 of 7” on page 4-26
D = Figure 4-15, “Flow Chart for Troubleshooting RF Section Problems - Link D – Part 5 of 7” on page 4-27
E = Figure 4-16, “Flow Chart for Troubleshooting RF Section Problems - Link E – Part 6 of 7” on page 4-28
F = Figure 4-17, “Flow Chart for Troubleshooting RF Section Problems - Link F – Part 7 of 7” on page 4-29

Figure 4-11. Flow Chart for Troubleshooting RF Section Problems – Start – Part 1 of 7

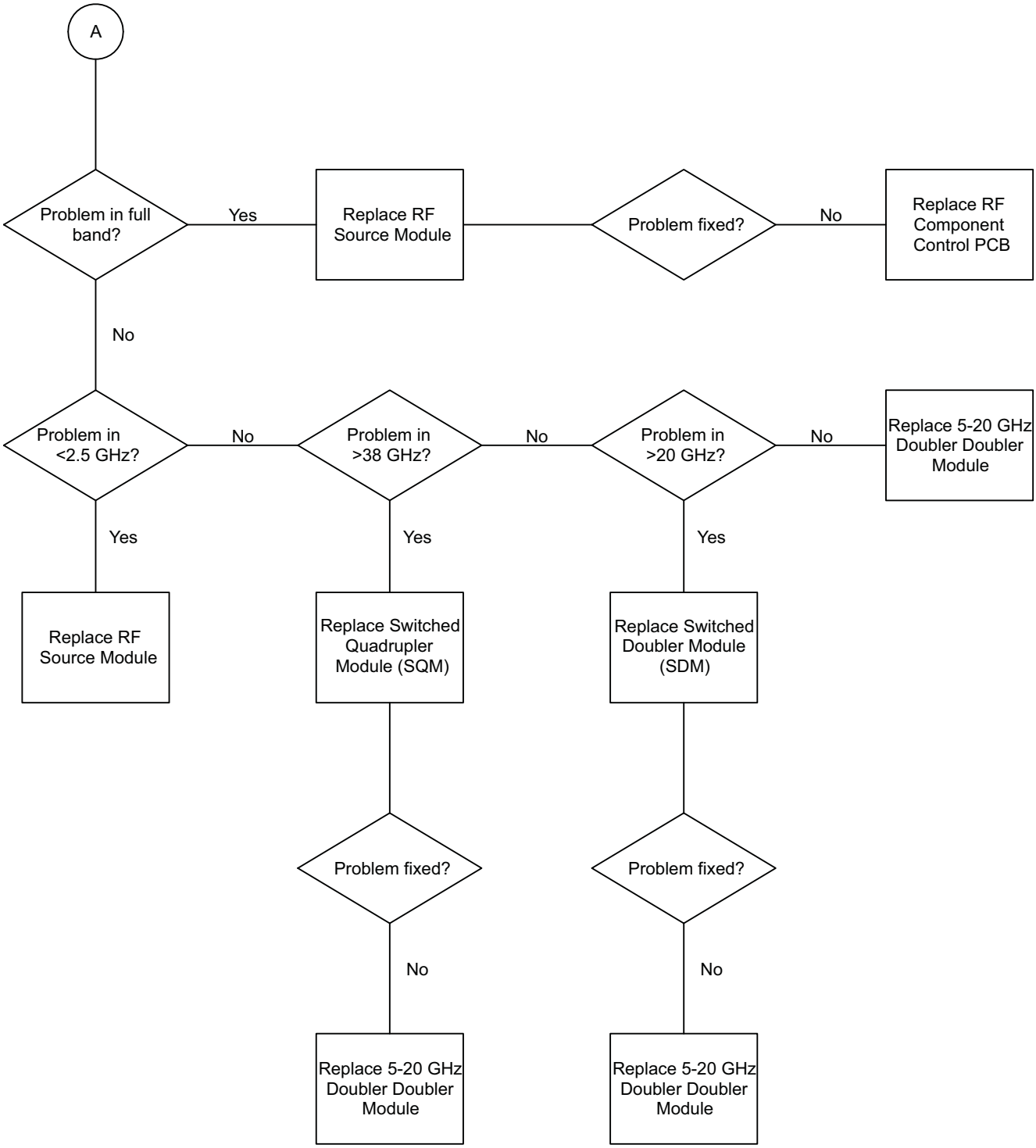

Start – Figure 4-11, “Flow Chart for Troubleshooting RF Section Problems – Start – Part 1 of 7” on page 4-23

Figure 4-12. Flow Chart for Troubleshooting RF Section Problems - Link A – Part 2 of 7

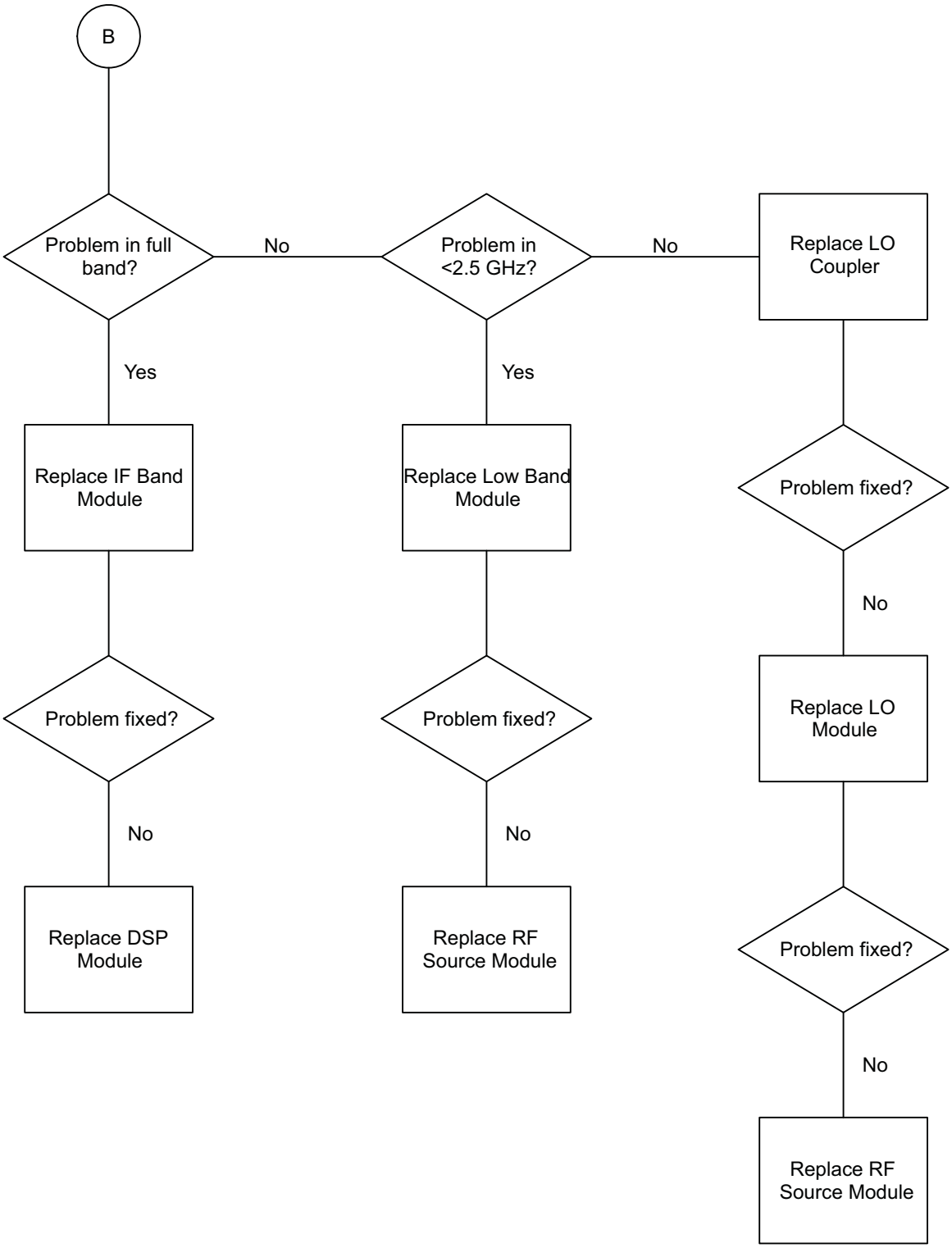

Start – Figure 4-11, “Flow Chart for Troubleshooting RF Section Problems – Start – Part 1 of 7” on page 4-23

Figure 4-13. Flow Chart for Troubleshooting RF Section Problems - Link B – Part 3 of 7

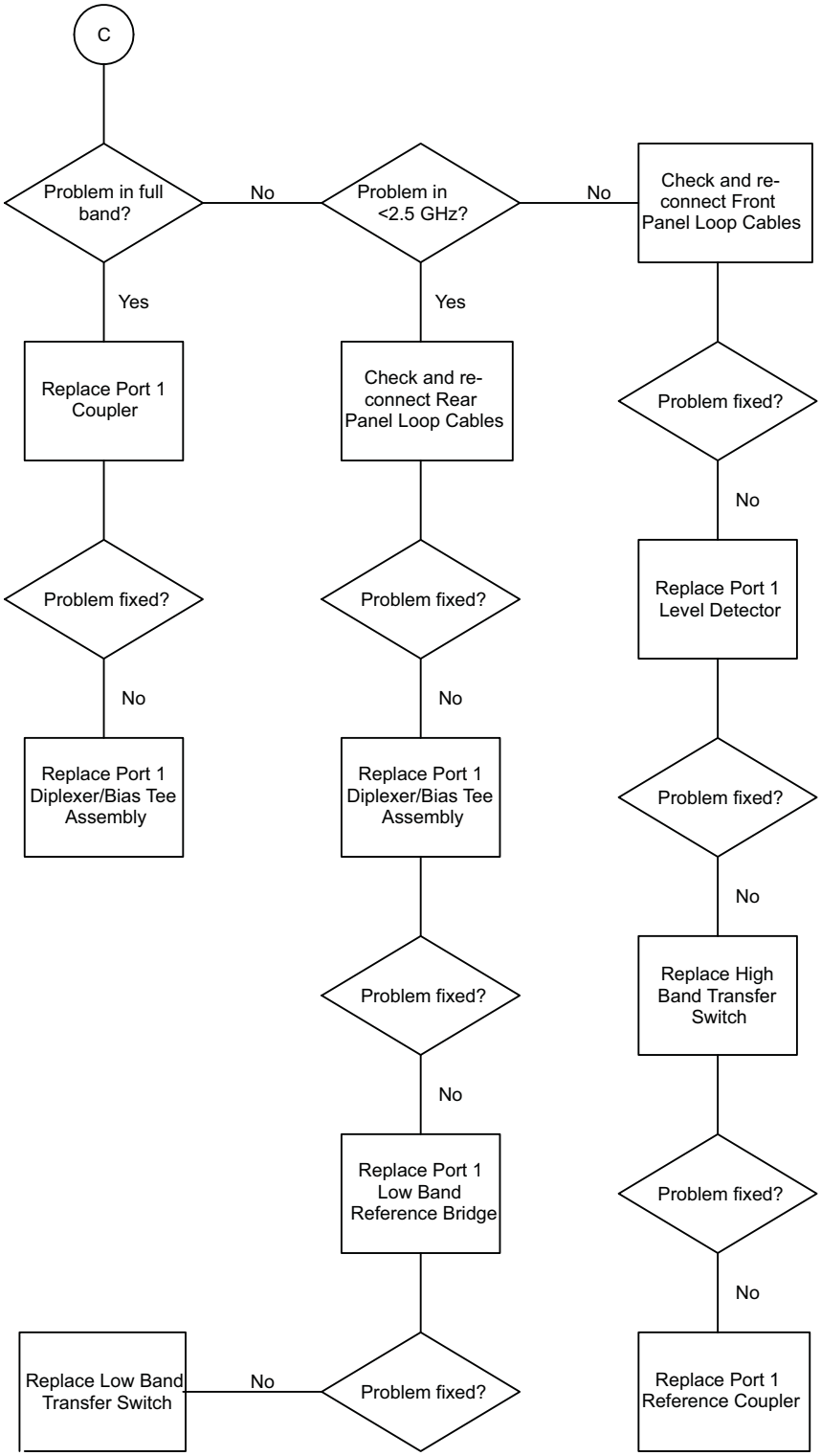

Start – Figure 4-11, “Flow Chart for Troubleshooting RF Section Problems – Start – Part 1 of 7” on page 4-23

Figure 4-14. Flow Chart for Troubleshooting RF Section Problems - Link C – Part 4 of 7

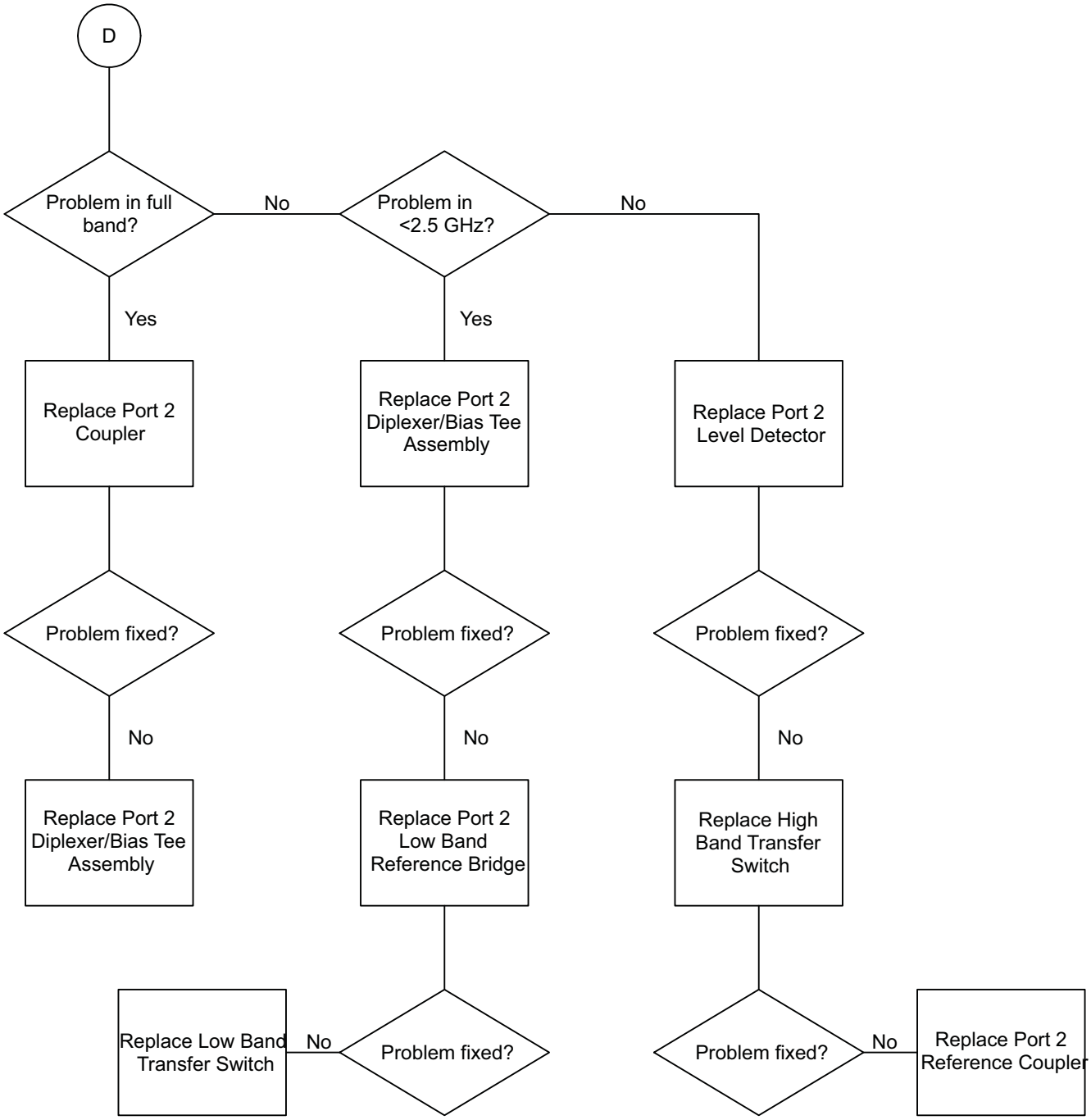

Start – Figure 4-11, “Flow Chart for Troubleshooting RF Section Problems – Start – Part 1 of 7” on page 4-23

Figure 4-15. Flow Chart for Troubleshooting RF Section Problems - Link D – Part 5 of 7

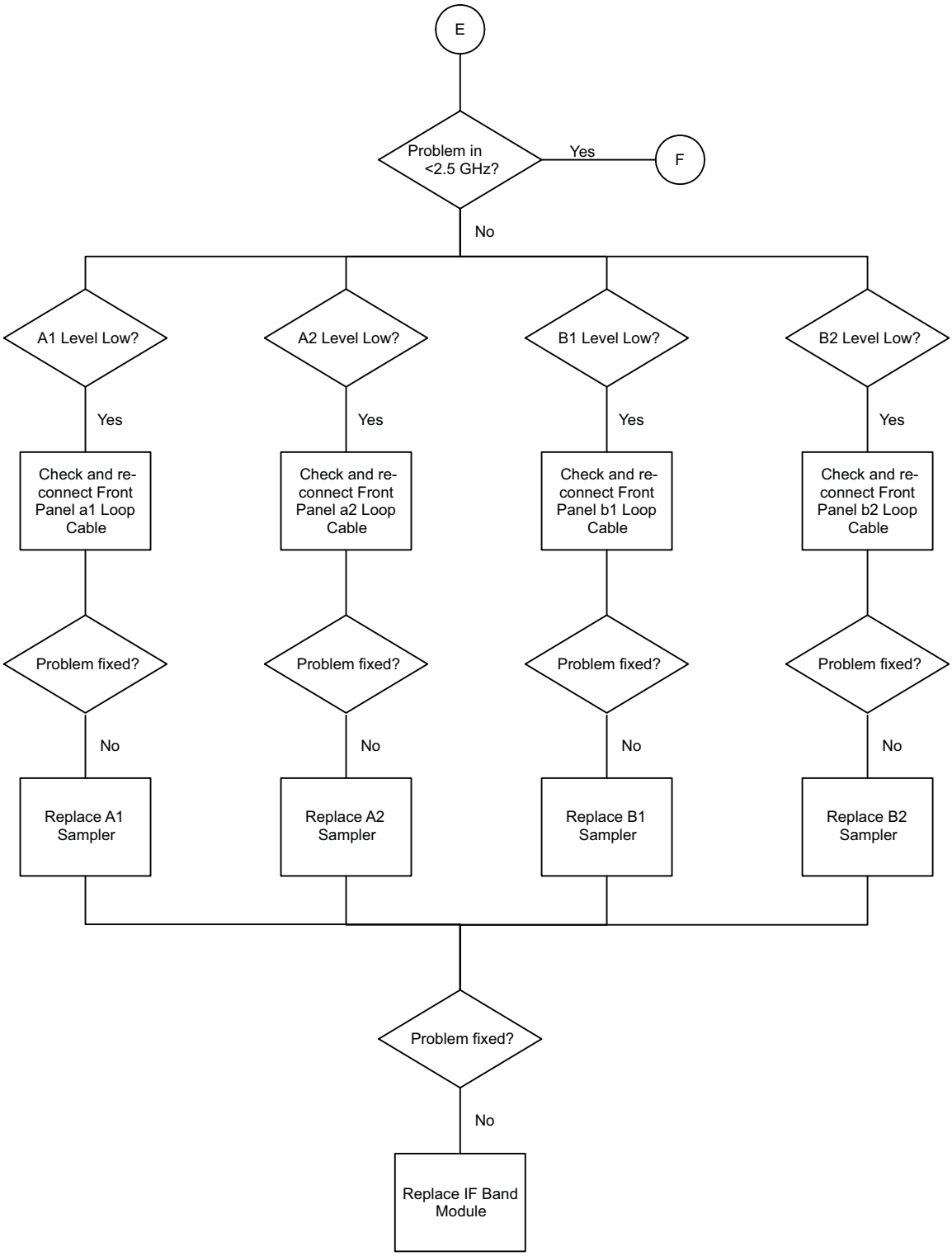

Start – Figure 4-11, “Flow Chart for Troubleshooting RF Section Problems – Start – Part 1 of 7” on page 4-23
F - Figure 4-17, “Flow Chart for Troubleshooting RF Section Problems - Link F – Part 7 of 7” on page 4-29

Figure 4-16. Flow Chart for Troubleshooting RF Section Problems - Link E – Part 6 of 7

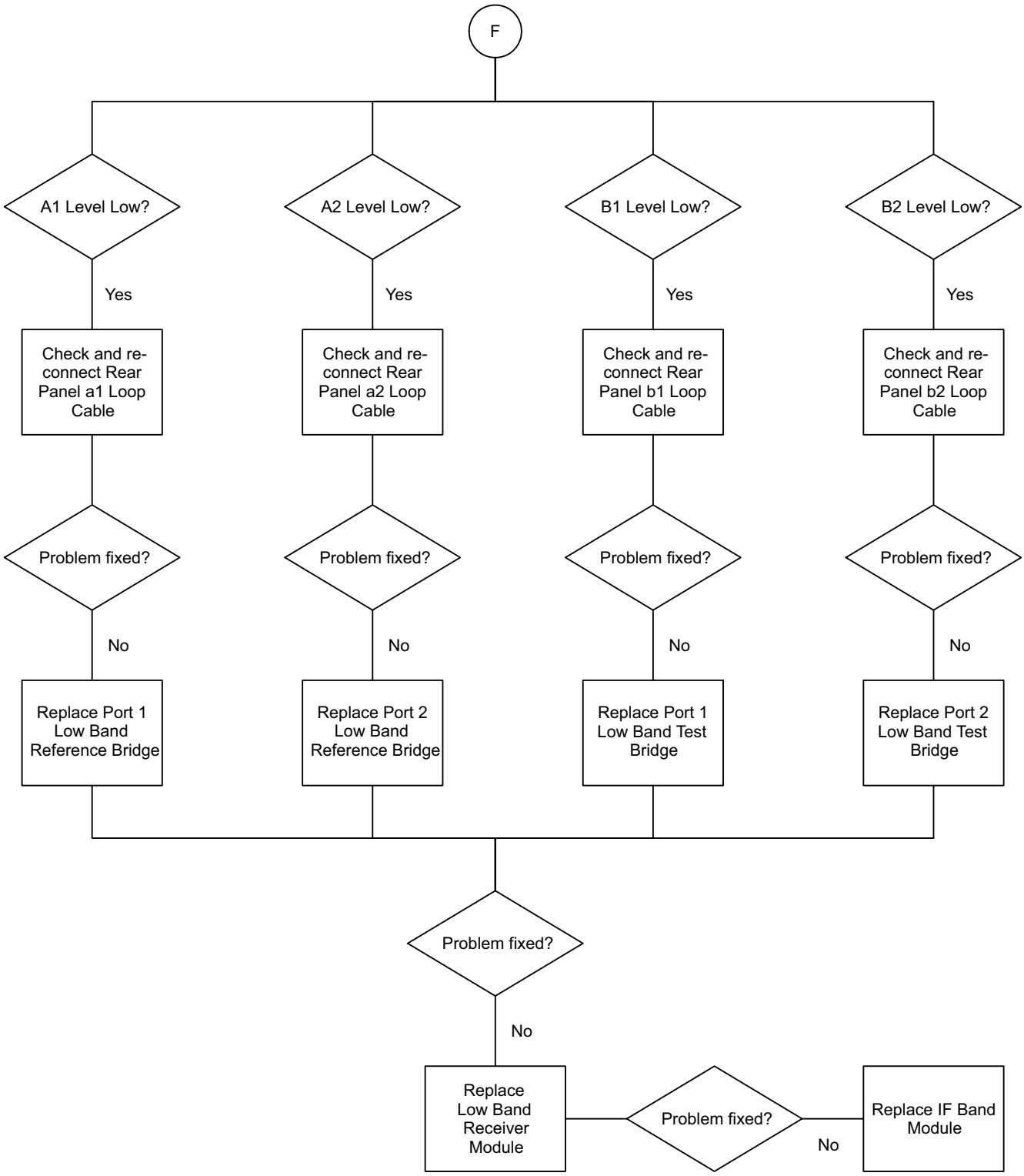

Start – Figure 4-11, “Flow Chart for Troubleshooting RF Section Problems – Start – Part 1 of 7” on page 4-23
E - Figure 4-16, “Flow Chart for Troubleshooting RF Section Problems - Link E – Part 6 of 7” on page 4-28

Figure 4-17. Flow Chart for Troubleshooting RF Section Problems - Link F – Part 7 of 7

4-14 Troubleshooting Frequency Related Problems

If the instrument exhibits frequency related problems, do the following:

1. Perform 10 MHz Frequency Adjustment. If it does not help, go to next step.
2. Apply external 10 MHz Reference to the rear panel input and set the instrument to use external reference.
3. If the problem does not show with the external reference, the problem is in the internal reference oscillator. Replace the IF Band Module.
4. If the instrument still exhibits the problem, replace the RF Source Module.

4-15 Troubleshooting Front Panel Problems

There are no serviceable items within the front panel assembly. Any failures of the front panel assembly require replacing the entire assembly as a whole. Refer to Table 4-6 below for a list of possible front panel problems and solutions.

Table 4-6. Front Panel Problems and Solutions

Problems	Solutions
Front Panel LCD touch screen not functioning.	• Perform LCD Touch Panel Adjustment
Front Panel LCD has no display but external monitor does.	• Replace Front Panel Assembly
Front Panel USB ports not functioning but rear panel USB ports do.	• Replace Front Panel Assembly • Replace SBC (CPU) Module
Front Panel Keys not functioning.	• Replace Front Panel Assembly

4-16 Troubleshooting Rear Panel Problems

The rear panel includes the following connectors:

- PS/2 Mouse Port
- PS/2 Keyboard Port
- USB Ports
- Serial Ports
- Parallel Ports
- LAN Port
- VGA Port
- IEEE488 (GPIB) Port
- Dedicated GPIB Port

To verify if any of these ports are functioning properly, connect a known good device with the appropriate interface and check the operation. If the device performs properly, then the port is functioning correctly. Refer to Table 4-7 for a list of problems and solutions.

Table 4-7. Rear Panel Problems and Solutions

Possible Problem	Solution
PS/2 Mouse Port	• Replace SBC (CPU) Module
PS/2 Keyboard Port	• Replace SBC (CPU) Module
USB Ports	• Replace SBC (CPU) Module
Serial Ports	• Replace SBC (CPU) Module
Parallel Ports	• Replace SBC (CPU) Module
LAN Port	• Replace SBC (CPU) Module
VGA Port	• Replace rear panel video interface cable • Replace Graphic Adapter Card
IEEE488 (GPIB) Port	• Replace GPIB Interface Card
Dedicated GPIB Port	• Replace DSP Module

4-17 Troubleshooting Software Problems

The VectorStar MS4640A VectorStar VNA uses an open Microsoft Windows 7 Professional or Windows XP Professional operating system. This requires service personnel to be knowledgeable about the Windows operating system in order to resolve the problems related to the operating system and the VectorStar Application software.

Troubleshooting OS Related Problems

Refer to Table 4-8 below for a list of possible Operating System (OS) software related problems and solutions.

Table 4-8. Possible Operating System Software-Related Problems

Possible Problem	Solution
A computer peripheral such as a COM port or the rear panel USB port is non-functioning	• Check Windows Device Manager for device conflict
Malicious software infection	• Run malicious software removal tools
VectorStar Application not functioning due to untested Windows Updates applied	• Remove the most recent Windows update using Add/Remove Programs in Windows Control Panel
VectorStar Application not functioning due to Windows Regional and Language Setting modification	• Reset the Windows Regional Setting and Language to English (United States) in Windows Control Panel

Troubleshooting VectorStar Application Software-Related Problems

If the Measurement Graphic User Interface (GUI) is not displayed after the instrument is turned on, check if the VectorStar Application Software is running using Windows Task Manager:

1. With the external keyboard connected, press **Alt-Ctrl-Delete** keys to bring up the Windows Task Manager.
2. Check if AC_GUIMain.exe is listed under the Process tab and if it consumes lots of CPU cycles.
   a. If it is, select the AC_GUIMain.exe and click on the “End Process” button.
      - If the End Process does not solve the problem, replace the **DSP Module**.
   b. If it is not listed, re-install the VectorStar Application Software.

4-18 Troubleshooting Measurement Problems

If the MS4640A measurement quality is suspect, the following paragraphs provide guidelines and hints for determining possible quality problems.

VNA Measurement Quality

The quality of MS4640A VNA measurements is determined by the following test conditions and variables:

1. The condition of the MS4640A.
2. The quality and condition of the interface connections and connectors.
3. The quality and condition of the calibration components, through cables, adapters and fixtures.
4. The surrounding environmental conditions at the time of the measurement.
5. The selection and performance of the calibration for the DUT being measured.

Checking Possible Measurement Problems

When determining possible measurement problems, check the following items:

1. Check the DUT and the calibration conditions:
   - **a.** Ensure that the Calibration Components Coefficients data has been installed into the system from the Calibration Kit in use.
   - **b.** Ensure that the proper calibration was done for the device being measured:
     - For high insertion-loss device measurements, the calibration should include isolation, high number of averages, and lower IF Bandwidth settings during the calibration.
     - For high return-loss device measurements, the calibration should also include a sliding load calibration or LRL calibration.
   - **c.** Check the condition of DUT mating connectors and their pin depth.
   - **d.** If possible, measure an alternate known good DUT.
   - **e.** Check if the environment is stable enough for the accuracy required for the DUT measurement.
     - The system should not be subjected to variations in temperature.
     - The system should not be placed in direct sun light or next to a changing cooling source, such as a fan or air conditioning unit.
2. Check the calibration using known good components from the calibration kit. If measurements of these devices do not produce good results, try the following:
   - **a.** Check through-cable stability including condition and pin depth. Replace with a known good cable, if necessary.
   - **b.** Check condition and pin depth of calibration kit components. Replace with known good components, if necessary.
   - **c.** Check condition and pin depth of test port connectors. Replace with known good ones if necessary.
3. Check the system performance as described in Chapter 3, “Performance Verification”.

Chapter 5 — Adjustment Procedures

5-1 Introduction

This chapter provides information about adjustments required for the MS4640A Series Vector Network Analyzers. Most of these adjustments are typically driven by the VectorStar Application software on the VNA to fine-tune the system hardware for optimum performance.

The adjustments are typically performed as a result of replacement of sub-assemblies or RF components or because out-of-tolerance conditions have been noted during instrument key performance parameter testing (see Chapter 3, "Performance Verification").

Note	Ensure that the instrument has warmed up for at least 90 minutes before proceeding.

These adjustments include:

- 10 MHz Frequency Reference Adjustment
- Source Pre-tune DAC Adjustment
- Source LO Level Adjustment
- SQM Power Adjustment (For Models MS4645A and MS4647A only)
- Source Auto Leveling Control Adjustment
- Analog In Adjustment
- Factory RF Calibration
- Factory Receiver Calibration
- LCD Touch Panel Calibration Adjustment

With the exception of the LCD Touch Panel Calibration Adjustment, perform these adjustments in the order listed if multiple adjustments are required.

Caution	Do not apply RF power to 5-20 GHz Doubler module or the Sampler/LO Distribution Assembly at any time when their outputs are not terminated as this will damage the components. Always disconnect the active component's input cable first before disconnecting its output cable. Always connect the active component's output cable first before re-connecting its input cable.

5-2 Recommended Test Equipment

The table below provides a list of recommended test equipment needed for the performance verification, calibration, and troubleshooting procedures presented in this manual.

Table 5-1. Recommended Test Equipment (1 of 2)

Instrument	Critical Specifications	Recommended Manufacturer Model Number
Frequency Counter	Frequency: 10 MHz Input Impedance: 50 Ohm	Anritsu Model MF2412B
Frequency Reference	Frequency: 10 MHz	Symmetricom Model RubiSource T&M
Power Meter	Power Range: –70 to +20 dBm	Anritsu Model ML2438A
Power Sensor	Frequency: 70 kHz to 70 GHz Connector Type: V	Anritsu Model SC7770 • The SC7770 70 kHz to 70 GHz Power Sensor is required for supporting MS4647A and other models with Option 70. A standard thermal power sensor with 10 MHz starting frequency (such as the MA24004A or MA24005A) can be used for adjusting non-option 70 units as long as it covers the top frequency of the instrument. Quantity: 2 • Using two SC7770 power sensors for power leveling-related adjustment provides a more convenient way to adjust both Port 1 and Port 2 without physically moving the power sensor from Port 1 to Port 2. The VectorStar application software also supports the use of only one power sensor for hardware adjustment.
Adapter	Type: N (m) to K (f)	Anritsu Model 34NKF50
Adapter	Type: V (f) to K (m)	Anritsu Model 34VFK50 Quantity: 2
Adapter	Type: V (f) to K (f)	Anritsu Model 34VFKF50 Quantity: 2
Adapter	Type: V (f) to V (f)	Anritsu Model 34VFVF50C Quantity: 2
Adapter	Type: N (m) to V (m)	Pasternack Model PE9718
Attenuator	Type: K (m) to K (f) Attenuation: 20 dB	Anritsu Model 43KC-20
Attenuator	Type: SMA (m) to SMA (f) Attenuation: 7 dB	Aeroflex/Inmet Model 18B-7
Calibration Kit	Connector Type: K	Anritsu Model 3652A K Connector or Anritsu Model 3652A-1 K Connector with Sliding Loads

Table 5-1. Recommended Test Equipment (2 of 2)

Instrument	Critical Specifications	Recommended Manufacturer Model Number
Calibration Kit	Connector Type: V	Anritsu Model 3654D V Connector or Anritsu Model 3654D-1 V Connector with Sliding Loads
Coaxial Cable	Frequency: DC to 40 GHz Connector Type: K (m) to K (f)	Anritsu Model 3670K50-2
Coaxial Cable	Frequency: DC to 70 GHz Connector Type: V (m) to V (f)	Anritsu Model 3670V50A-2
PC Keyboard	Interface: PS/2 or USB 2.0, US English	Any
PC Mouse	Interface: PS/2 or USB 2.0	Any

5-3 Recommended Adjustment Procedures

Table 5-2 below lists the adjustments that should be performed following the replacement of many MS4640A sub-assemblies or RF components.

Table 5-2. Required Replacement Assembly Adjustments (1 of 3)

Sub-Assembly or RF Component Replaced	Perform the Following Adjustment(s)	Procedure Sections
Note 1: Perform all adjustment procedures if original Cal Data files are not available		
Front Panel Assembly	LCD Touch Panel Adjustment	5-13
SBC (CPU) PCB Assembly	None	
USB Controller PCB Assembly	None	
PMC Extender PCB Assembly	None	
Graphics Adapter Card Assembly	None	
Graphics Processor Unit (GPU) PCB Assembly	None	
GPIB Module	None	
Carrier Board (CB) PCB Assembly	None	
Digital Signal Processor (DSP) PCB Assembly	All (See Note 1 above)	All (See Note 1 above)
Hard Disk Drive (HDD) Assembly	None	None
Solid State Drive (SSD) Assembly	None	None
Power Supply	None	
RF Component Control PCB Assembly	High Band Source Auto-Leveling Control Adjustment	5-9
Low Band Receiver Module PCB Assembly	Factory Receiver Calibration	5-12
IF Band Module	10 MHz Frequency Reference Adjustment	5-5
	Factory RF Calibration	5-11
	Factory Receiver Calibration	5-12
RF Source Module	Source Pre-tune DAC Adjustment	5-6
	Source LO Level Adjustment	5-7
	SQM Power Adjustment (See Note 1)	5-8
	Source Auto Leveling Control (Source ALC) Adjustment	5-9
	Factory RF Calibration	5-11
	Factory Receiver Calibration	5-12
Low Band Bridge, Reference or Test	Source Auto Leveling Control Adjustment	5-9
	Factory RF Calibration	5-11
	Factory Receiver Calibration	5-12
High Band Coupler, Reference or Test	Source Auto Leveling Control Adjustment	5-9
	Factory RF Calibration	5-11
	Factory Receiver Calibration	5-12

Table 5-2. Required Replacement Assembly Adjustments (2 of 3)

Sub-Assembly or RF Component Replaced	Perform the Following Adjustment(s)	Procedure Sections
Note 1: Perform all adjustment procedures if original Cal Data files are not available		
Low Band Transfer Switch	Source Auto Leveling Control Adjustment	5-9
	Factory RF Calibration	5-11
	Factory Receiver Calibration	5-12
High Band Transfer Switch	Source Auto Leveling Control Adjustment	5-9
	Factory RF Calibration	5-11
	Factory Receiver Calibration	5-12
5-20 GHz Doubler Module	SQM Power Adjustment (This adjustment only for Model MS4645A 50 GHz or MS4647A 70 GHz VNAs)	5-8
	Source Auto Leveling Control Adjustment	5-9
	Factory RF Calibration	5-11
	Factory Receiver Calibration	5-12
Switched Doubler Module	Source Auto Leveling Control Adjustment	5-9
	Factory RF Calibration	5-11
	Factory Receiver Calibration	5-12
Switched Quadrupler Module	Source Auto Leveling Control Adjustment	5-9
	Factory RF Calibration	5-11
	Factory Receiver Calibration	5-12
Level Detector, Port 1 or Port 2	Source Auto Leveling Control Adjustment	5-9
	Factory RF Calibration	5-11
	Factory Receiver Calibration	5-12
Diplexer/Bias Tee Module	Source Auto Leveling Control Adjustment	5-9
	Factory RF Calibration	5-11
	Factory Receiver Calibration	5-12
Port 1 Source Step Attenuator, Low Band or High Band	Source Auto Leveling Control Adjustment	5-9
	Factory RF Calibration	5-11
	Factory Receiver Calibration	5-12
Port 1 Test Step Attenuator, Low Band or High Band	Factory RF Calibration	5-11
	Factory Receiver Calibration	5-12
Port 2 Source Step Attenuator, Low Band or High Band	Source Auto Leveling Control Adjustment	5-9
	Factory RF Calibration	5-11
	Factory Receiver Calibration	5-12
Port 2 Test Step Attenuator, Low Band or High Band	Factory RF Calibration	5-11
	Factory Receiver Calibration	5-12
LO Distribution Module	Source LO Level Adjustment	5-7
	Factory RF Calibration	5-11
	Factory Receiver Calibration	5-12

Table 5-2. Required Replacement Assembly Adjustments (3 of 3)

Sub-Assembly or RF Component Replaced	Perform the Following Adjustment(s)	Procedure Sections
Note 1: Perform all adjustment procedures if original Cal Data files are not available		
Sampler Module	Factory RF Calibration	5-11
	Factory Receiver Calibration	5-12
LO Coupler Module	Source LO Level Adjustment	5-7
	Factory RF Calibration	5-11
	Factory Receiver Calibration	5-12

5-4 Adjustment Setup

With the exception of the LCD Touch Panel Calibration Adjustment, the hardware adjustment functions are accessed by selecting the Diagnostics button under the System Menu. The Diagnostics Menu is password-protected to prevent a casual VNA user from changing the correction coefficients inadvertently.

Procedure

To access the DIAGNOSTICS menu, do the following:

1. Plug in the PC keyboard and PC Mouse to the rear panel of the VNA.
2. Power on the VNA and wait until the VectorStar application is running.
3. Press the **System** key on the front panel.
4. Select the Diagnostics button on the right-side menu.
5. The DIAGNOSTICS ACCESS dialog box appears providing an entry field to enter the diagnostics access password as shown below in Figure 5-1.

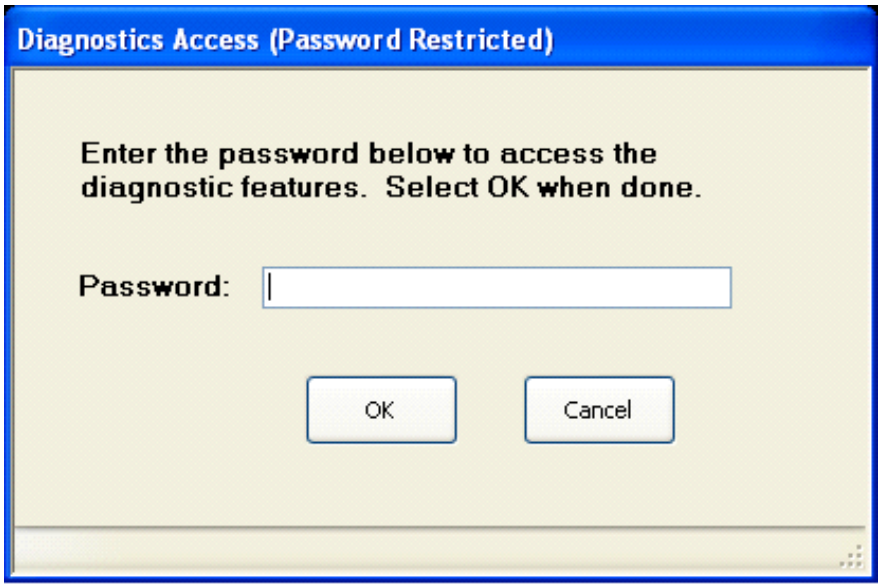

Figure 5-1. Password to Enter Diagnostics

6. Enter the password CajaNueva in the Password field and click OK.
7. The Diagnostics Menu appears as shown below in Figure 5-2.
8. Select Hardware Cal to access the HARDWARE CAL menu as shown below in Figure 5-3 on page 5-9.

Figure 5-2. DIAGNOSTICS Menu

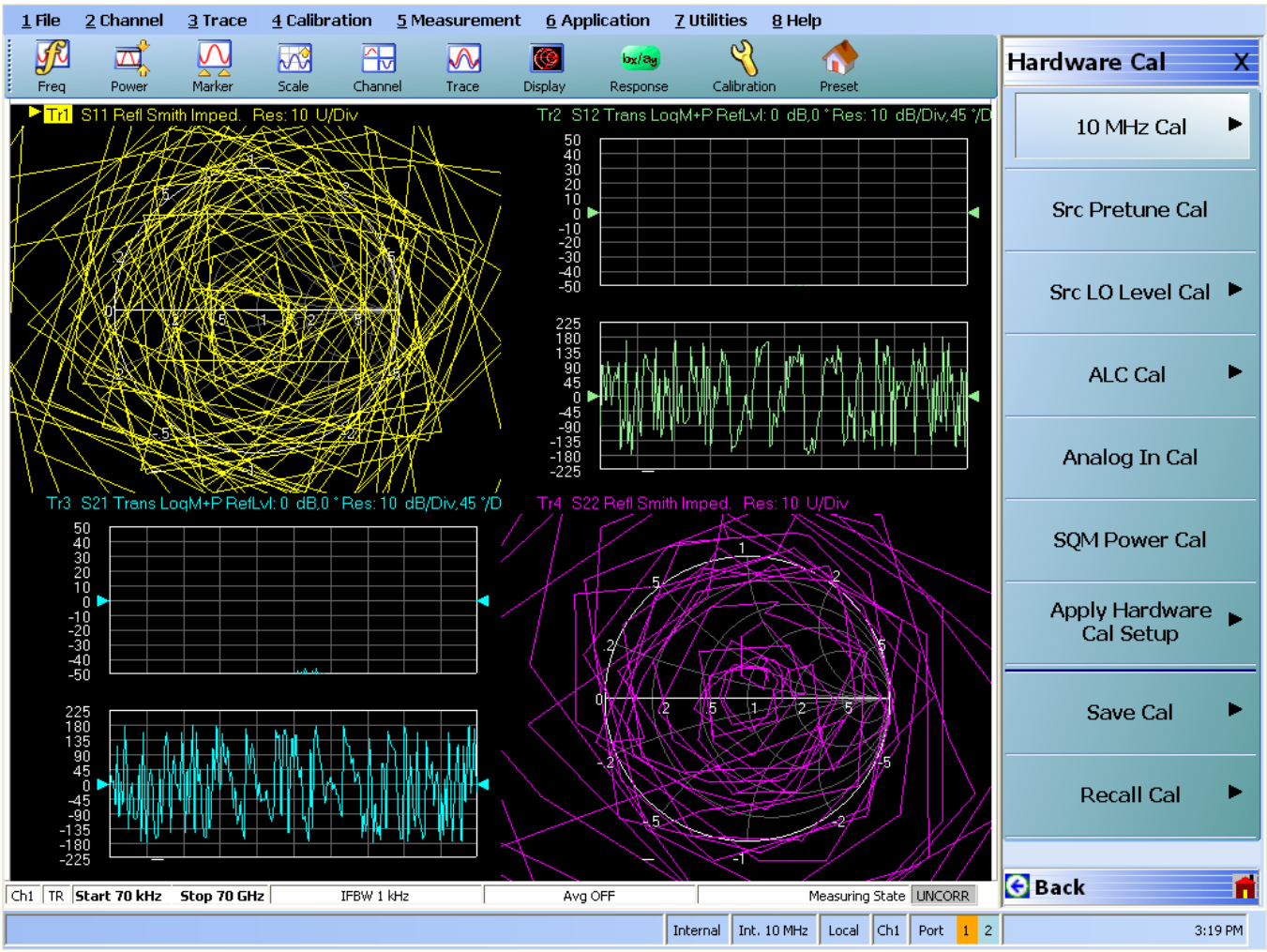

Figure 5-3. HARDWARE CAL Menu

9. Select Factory Cal to access the FACTORY CAL menu with its RF Cal and Rcvr Cal sections as shown in Figure 5-4 below.

Figure 5-4. FACTORY CAL Menu

5-5 10 MHz Frequency Reference Adjustment (10 MHz Cal)

The 10 MHz calibration adjusts the frequency accuracy of the 10 MHz Reference Oscillator of the MS4640A. Two methods, Automatic or Manual, can be used for this adjustment.

Automatic Method Required Equipment

- Anritsu Model MF2412B Frequency Counter
- 10 MHz Reference Timebase
- GPIB Interface Cable
- RF Coaxial Cable, K(m) to K (f)
- Adapter, V (f) to K(m)
    - Only for MS4645A and MS4647A VNAs

Automatic Procedure

1. Connect the Frequency Counter 10 MHz Reference In to the 10 MHz Reference Timebase.
2. Connect the GPIB Interface Cable between the VNA Dedicated GPIB port and the Frequency Counter GPIB port.
3. Warm up both the Frequency Counter and the VNA for at least 90 minutes.
4. Access the HARDWARE CAL menu as described above in Section 5-4, “Adjustment Setup” on page 5-7.
5. Select the 10 MHz Cal button and the 10 MHz CALIBRATION (AUTOMATIC) dialog box appears as shown below in Figure 5-5.
6. Connect a coaxial cable between the frequency counter input port and VNA port 1.
7. Click the Start Cal button to begin the adjustment.
8. Click the Close button when the calibration is complete

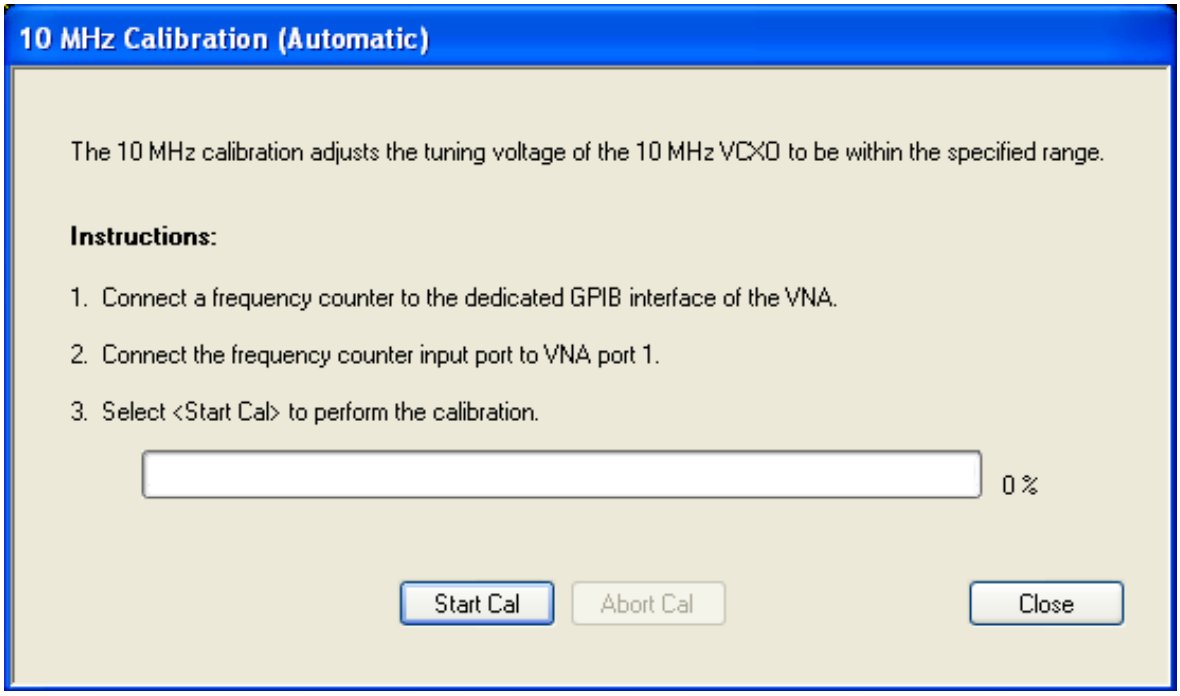

Figure 5-5. 10 MHz Calibration - Automatic

Manual Method Required Equipment

- Any Frequency Counter with top frequency coverage > 17 GHz
- 10 MHz Reference Timebase
- RF Coaxial Cable, K(m) to K (f)
- Adapter, V (f) to K(m)
    - Only for MS4645A and MS4647A VNAs

Manual Method Procedure

1. Connect the Frequency Counter 10 MHz Reference In to the 10 MHz Reference Timebase.
2. Warm up both the Frequency Counter and the VNA for at least 90 minutes.
3. Access the HARDWARE CAL menu as described above in Section 5-4, “Adjustment Setup” on page 5-7.
4. Select the 10 MHz Cal button and the 10 MHz CALIBRATION (MANUAL) dialog box appears as shown in Figure 5-6 below.
5. Connect a coaxial cable between the frequency counter input port and VNA port 1.
6. Change the DAC Number by clicking the up or down arrow button until the frequency counter reads 17 GHz ± 700 Hz.
7. Click the Save Change button to save the DAC value.
8. Click the Close button to complete the adjustment.

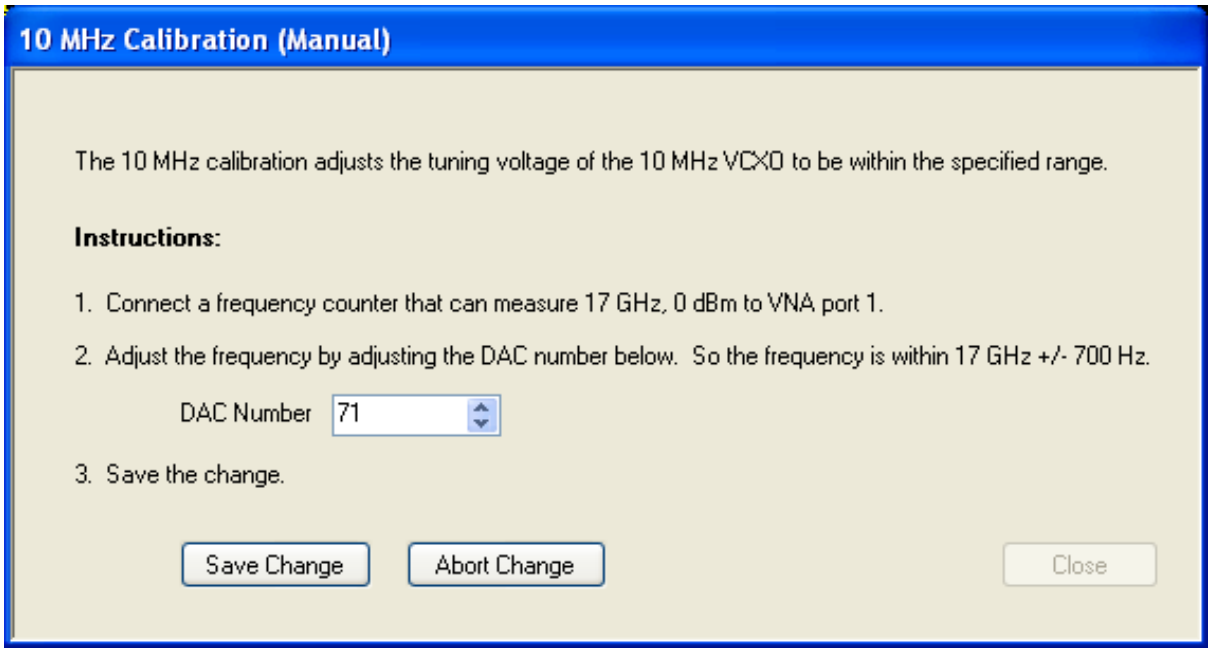

Figure 5-6. 10 MHz Calibration - Manual Method

5-6 Source Pretune DAC Adjustment (Src Pretune Cal)

This calibration adjusts the pre-tune DAC values for the RF Source Module.

Equipment Required

- None

Procedure

1. Warm up the VNA for at least 90 minutes.
2. Access the HARDWARE CAL menu as described above in Section 5-4, “Adjustment Setup” on page 5-7.
3. Select Src Pretune Cal button and the Calibration Progress dialog box appears as shown in Figure 5-7 below.
4. The dialog box will close by itself when the calibration is completed successfully.

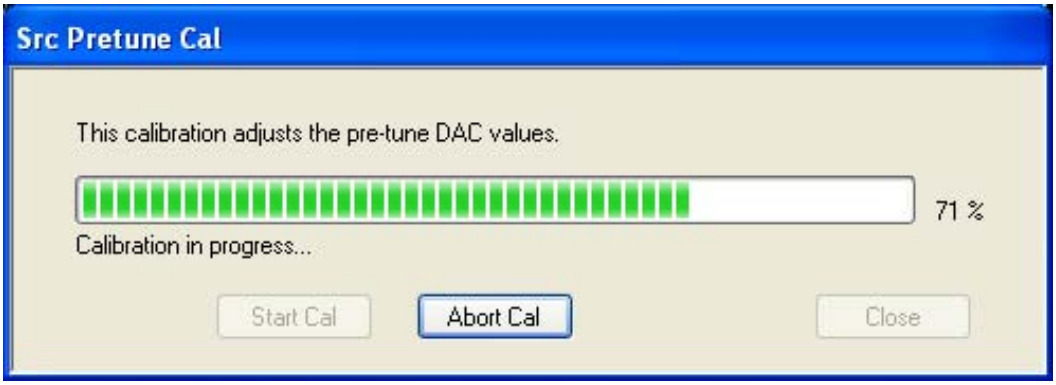

Figure 5-7. Src (Source) Pretune Calibration Progress Dialog Box

5-7 Source LO Level Adjustment (Src LO Level Cal)

This adjustment optimizes the Source LO level into the samplers. Removal of the instrument external cover is required.

Equipment Required

- Anritsu ML2438A Power Meter
- Anritsu SC7770 Power Sensor
- Anritsu 34NKF50 N (m) to K (f) Adapter
- Anritsu 34VFK50 V (f) to K (m) Adapter
- Anritsu 34VFKF50 V (f) to K (f) Adapter
- Anritsu 43KC-20 20 dB Fixed Attenuator
- Anritsu 3670K50-2 or 3670V50A-2 Through cable
- Aeroflex/Inmet 18B-7 7 dB Fixed Attenuator
- GPIB Interface cable

Procedure

Caution	The RF output level from the instrument component exceeds the damage level of the power sensor. Follow the procedure steps below closely, especially where a protective fixed attenuator is attached to the power sensor.

1. Remove the outer cover and lay the VNA with its left side down on an anti-static safe workstation.
2. Connect a GPIB Interface cable between the Power Meter GPIB port and the VNA Dedicated GPIB port.
3. Warm up the VNA and power meter for at least 90 minutes.

Low Band LO Level Adjustment

4. Connect the **34VFK50 Adapter** to the power sensor.
5. Connect the **34NK50 Adapter** to the power meter Calibrator port.
6. Connect the power sensor with adapter to the Calibrator port of the power meter and then perform a Zero/Cal on the power sensor.
7. Disconnect the power sensor with the **34VFK50 Adapter** attached to its input.
8. Access the HARDWARE CAL menu as described above in Section 5-4, “Adjustment Setup” on page 5-7.

9. Select the Src LO Level Cal button. The LO CAL menu appears as shown in Figure 5-8 below.

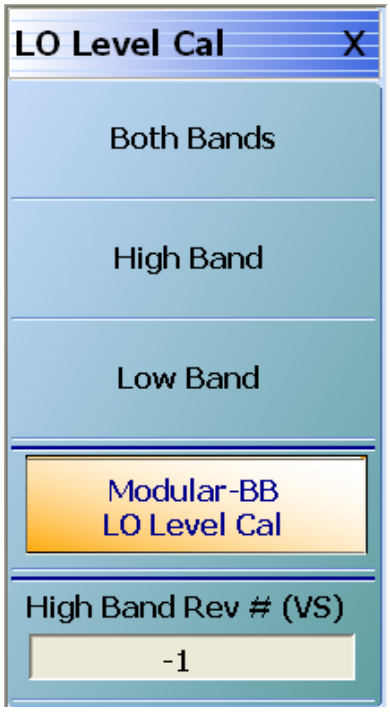

If the A111 LO Distribution Module – ND70081 – 66270 is installed: • Set the **High Band Rev # (VS)** to -1 (minus one).	If the A111 LO Distribution Module – ND73193 – 72440 is installed: • Set the **High Band Rev # (VS**) to 1 (one).

Figure 5-8. LO LEVEL CAL Menu and High Band Rev (VS) Setting

10. Select the Low Band button. The SRC LO LEVEL CAL (LOW BAND) CALIBRATION dialog box appears as shown in Figure 5-9 below. Do not start the calibration yet.

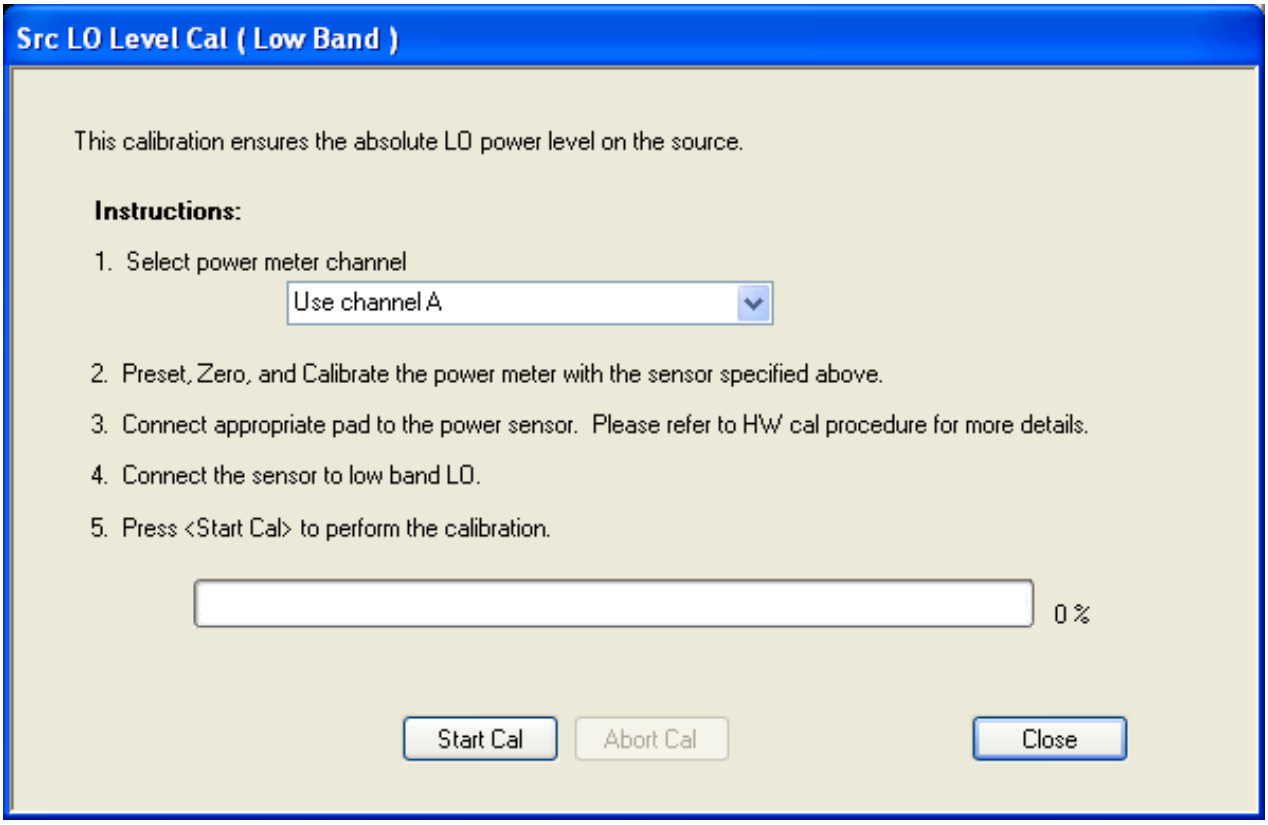

Figure 5-9. Src LO Level Cal (Low Band) Calibration Dialog Box

11. Disconnect the Low Band LO Output cable from J6 LB LO1 OUT on the middle A13 RF Source Module as shown in Figure 5-11, "High Band LO Cal Point for a2 on the A103 Sampler J2 connector" on page 5-19 below.

Note	Some units may have a 3 dB fixed attenuator inserted between the connector on the RF Source Module and RF cable. Leave the fixed attenuator in place and treat the open end of the fixed attenuator as the RF Source Module output.

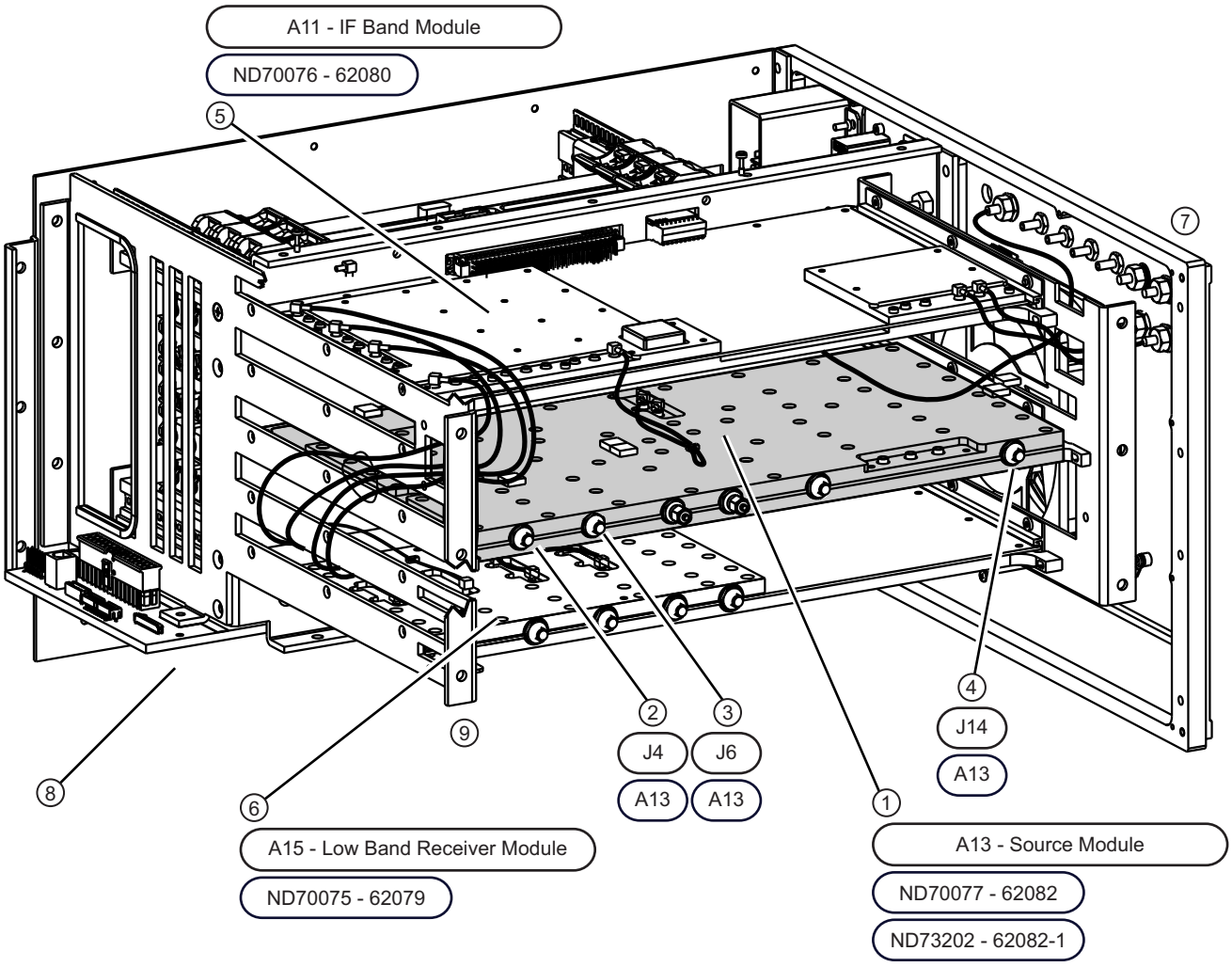

A13 Source Module Assembly	**Analog Module Assemblies**
1. A13 Source Module – ND70077 – 62082 or ND7302 – 62082-1	5. A11 IF Band Module – ND70076 – 62080
2. A13 J4 HB LO1 OUT – High Band Local Oscillator 1 Output	6. A15 Low Band Receiver Module – ND70075 – 62079
3. A13 J6 LB LO1 OUT – Low Band Local Oscillator 1 Output	**Orientation**
4. A13 J14 HB OUT – High Band Output	7. Rear Panel Assembly
	8. Front Panel (removed for clarity) and Motherboard 1 PCB Assembly
	9. Chassis Right Side Plate (removed for clarity)

Figure 5-10. J4, J6, and J14 Connector Locations – A13 RF Source Module

12. Connect the 7 dB fixed attenuator to the K connector end of 34VFK50 Adapter that is attached to the power sensor. Then connect the power sensor with Adapter and Attenuator to J6 LO1 OUT connector of the RF Source.
13. On the MS4640A, click on the Start Cal button to start the calibration.
14. When calibration is complete, close the dialog box.
15. Disconnect the power sensor and reconnect Low Band LO Output cable to J6 LB LO1 OUT of the RF Source Module. Re-torque the connection using 5/16” 8 lbf · in (8 mm 0.9 N · m) torque wrench.

High Band LO Level Adjustment

Caution	Do not apply RF power to the Sampler/LO Distribution Assembly at any time when their outputs are not terminated as this will damage the components. Always disconnect the active component’s input cable first before disconnecting its output cable. Always connect the active component’s output cable first before re-connecting its input cable. It is very important to perform the next two steps in the order presented.

16. First, disconnect the High Band LO Output cable from J4 HB LO1 OUT connector of RF Source Module as shown above in Figure 5-11 on page 5-19. This is done to prevent damage to the Sampler/LO Distribution Assembly.

17. Then, disconnect the semi-rigid cable from the LO Input of the a2 Sampler. Gently bend the cable out towards the front of the instrument.

- See the general location of the **a2** general location above in Figure 5-11, “High Band LO Cal Point for a2 on the A103 Sampler J2 connector” on page 5-19).

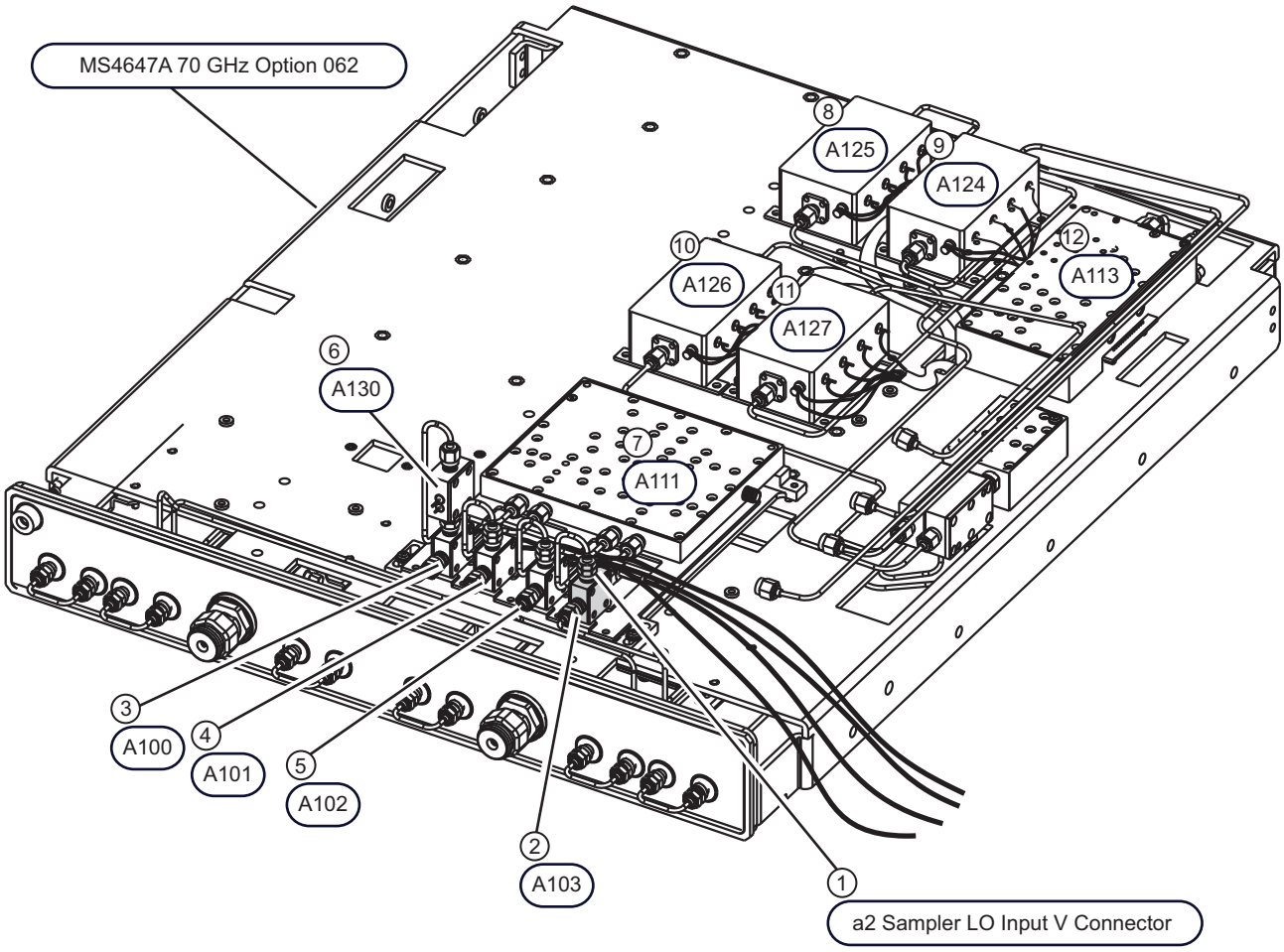

Figure 5-11. High Band LO Cal Point for a2 on the A103 Sampler J2 connector

MS4647A 70 GHz RF Deck with Option 062 shown.	Low Band Attenuators
High Band Cal Point 1. A103 a2 – a2 Sampler LO Input V Connector – Disconnect semi-rigid coaxial line here. 2. A103 – Sampler Module – ND70082 – 64180 – Disconnect semi-rigid coaxial line at a2 Sampler Input. **Sampler/LO Distribution Module Assembly** The in addition to the A103 above, the Sampler/LO Distribution Module Assembly consists of these components: 3. A100 – Sampler Module – ND70082 – 64108 4. A101 – Sampler Module – ND70082 – 64108 5. A102 – Sampler Module – ND70082 – 64108 6. A130 – LO Coupler Module – ND70083 – 68848 – Not present on all VNAs. If present, mounts on top of the A100 or the A101. 7. A111 – LO Distribution Module Assembly – With sockets for the A100, A101, A102, and A105. Two (2) machine screws hold each Sampler Module in place.	8. A124 – Low Band Port 1 Test (P1 b1) Attenuator – ND70085 – 3-2000-1502 9. A125 – Low Band Port 1 Source (P1 Src) Attenuator – ND70084 – 3-2000-1502 10. A126 – Low Band Port 2 Source (P2 Src) Attenuator – ND70086 – 3-2000-1502 11. A127 – Low Band Port 2 Test (P2 b2) Attenuator – ND70087 – 3-2000-1502 12. A113 – 5-20 GHz Doubler Module – ND70080 – 64920

Figure 5-11. High Band LO Cal Point for a2 on the A103 Sampler J2 connector

18. See close up detail of the A103 Sampler Module and the a2 Sampler Input in Figure 5-11 above or Figure 5-12 on page 5-21 below.

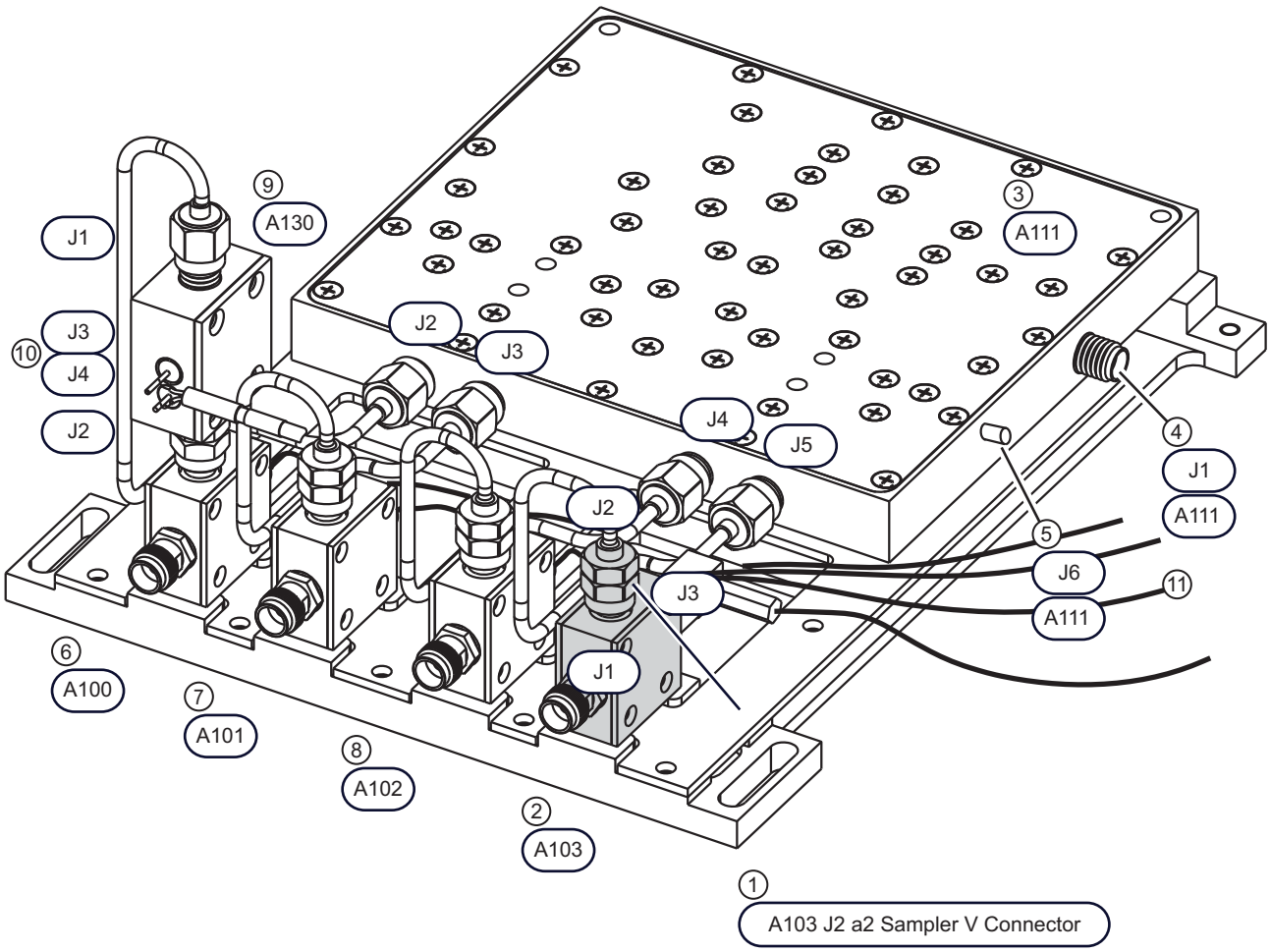

Figure 5-12. A103 a2 Sampler V Connector Location (1 of 2)

Sampler/LO Distribution Module Assembly

The Sampler/LO Distribution Module Assembly consists of the A111, A100, A101, A102, and A103 modules, and sometimes the A130 module.

a2 Sampler

1. a2 Sampler – Top J2 connector on the A103 Sampler Module.
2. A103 – Sampler Module – ND70082 – 64180 – Inserted into position 4 (right) sockets on the A111.

A111 LO Distribution Module

3. A111 – LO Distribution Module Assembly and Chassis – ND70081 – 62084 or ND73193 – 72240
4. A111 J1 – Connects via a semi-rigid coaxial cable to the A13 Source Module J4 High Band LO connector.
5. A111 J6 – For later systems without an A130 LO Coupler Module, the A111 J6 connector connects an MCX-MCX coaxial cable to A13 Source Module PCB Assembly (middle analog PBC) J17.

Sampler Modules

6. A100 – Sampler Module – ND70082 – 64180 – Inserted into position 1 (left) sockets in the A111.
7. A101 – Sampler Module – ND70082 – 64180 – Inserted into position 2 (left center) sockets on the A111.
8. A102 – Sampler Module – ND70082 – 64180 – Inserted into position 3 (right center) sockets on the A111.

A130 LO Coupler Module

9. A130 – LO Coupler Module – ND70083 – 68848
   - This module is not present on some VNAs.
   - The module mounting position varies with the instrument Phase and equipped options.
   - Early Phase 1 VNAs have the A130 module mounted on top of the A100 Sampler Module J2 connector.
   - Late Phase 1 VNAs have the A130 module mounted on top of the A101 Sampler Module J2 connector.
10. A130 J3/J4 pins – Soldered-on coaxial cable to MCX connector.
    - If A130 is present, cable routes to A13 Source Module PCB – ND70077 – 62082 or ND73202 – 62082-1.

Sampler Modules to A11 Module Coaxial Cables

11. MCX to MCX coaxial cables from A100, A101, A101, and A103 Sampler Module J3 (rear facing) connectors to the upper A11 IF Band Module.

Figure 5-12. A103 a2 Sampler V Connector Location (2 of 2)

19. On the power sensor, replace the **7 dB Fixed Attenuator** with a **20 dB Fixed Attenuator**. Connect the **34VFKF50 Adapter** to the end of the 20 dB Fixed Attenuator.

20. Connect the power sensor with the Attenuator and Adapter to the free end of the a2 LO semi-rigid cable mentioned in Step 17.

21. Re-connect the **High Band LO Output cable** to J4 HB LO1 OUT connector of RF Source Module.

- See Figure 5-11 on page 5-19 above.

22. On the MS4640A user interface, set the High Band Rev # (VS) to -1 (minus one) or 1 (one) depending on the A111 LO Distribution Module installed.

- A111 LO Distribution Module – ND70081 – 66270 = -1 (minus one)
- A111 LO Distribution Module – ND73193 – 72440 = 1 (one)

23. On the MS4640A, click on the High Band button and the SRC LO LEVEL CAL (HIGH BAND) CALIBRATION dialog box appears as shown in Figure 5-13 below.

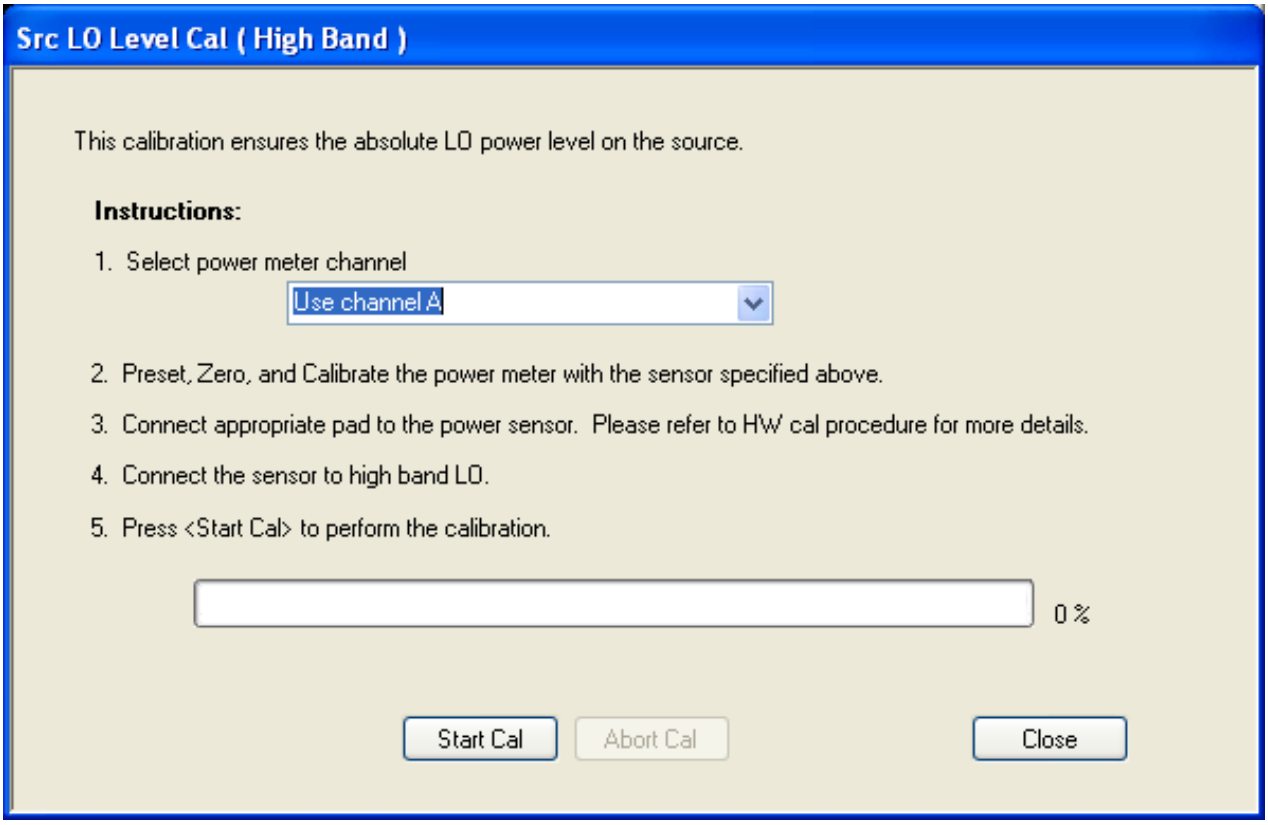

Figure 5-13. Src LO Level Cal (High Band) Calibration Dialog Box

24. Click on the Start Cal button to start the calibration.

25. When complete, close the dialog box.

26. Disconnect the **High Band LO Output cable** from J4 HB LO1 OUT connector of RF Source Module as shown in Figure 5-11, "High Band LO Cal Point for a2 on the A103 Sampler J2 connector" on page 5-19 above. This is done to prevent damage to the Sampler/LO Distribution Assembly.

27. Disconnect the power sensor from the a2 LO semi-rigid cable and gently reconnect it back to the LO Input of a2 Sampler as shown in Figure 5-11 on page 5-19 above.

28. Reconnect the High Band LO Output cable from J4 HB LO1 OUT connector of RF Module as shown in Figure 5-11 on page 5-19 above.

29. Re-torque all connections that were loosened in this procedure using a 5/16" 8 lbf · in (8 mm 0.9 N · m) torque wrench.

30. Re-install the outer cover.

Low Band LO Level Optimization

The following steps are used to improve the Low Band Noise Floor performance.

Note	To use this optimization procedure, the VectorStar VNA must have Version 1.2 VectorStar Application software installed. The version number is displayed on the start up splash screen when you turn on VectorStar. You can also display the version information at any time by using the top menu bar and navigating to **MENU BAR | 8. Help | HELP Drop-Down Menu | 3. About VectorStar**. The VectorStar Application Software may be downloaded from the VectorStar Users Site at **http://www.us.anritsu.com/VectorStar** Then navigate to the VectorStar Users Site.

31. Verify that the Noise Floor below 2.5 GHz is within specifications by performing the Noise Floor Test as described in Chapter 3, "Performance Verification". If the Noise Floor below 2.5 GHz meets specifications, skip this procedure.

32. Select Save Cal and then Src LO Level Cal to save the LO Cal Table data file ("`LOCal.slc`") to the default `Data` folder.

33. Open Windows Explorer and navigate to the `C:\AnritsuVNA\Data` folder.

34. Open the "`LOCal.slc`" file with Windows Notepad.

35. Locate the `<LowBand>` section and decrease the DAC values of `Point_8` through `Point_12` (500 MHz to 800 MHz) by 2000 as shown in the code listing below in Figure 5-14, "Location of Low Band DAC values that require modification" on page 5-25.

36. Save the file as "`LOCal_new.slc`."

Note	When using Notepad, add quotation marks (") around the new file name; otherwise, Notepad will append ".txt" to the file name.

37. Select Recall Cal and then Src LO Level Cal to load the new modified data from "`LOCal_new.slc`" back to the internal memory of the instrument.

38. Verify if the instrument passes the Noise Floor test in the low band (<2.5 GHz).

39. If the instrument still fails the Noise Floor test in the low band, repeat steps 12 through 16 until the instrument passes (decreasing the DAC values by 500 counts each attempt).

```
<LowBand>
   <CalVersion>1</CalVersion>
   <CheckSum>320</CheckSum>
   <TimeStamp>
      <Year>2008</Year>
      <Month>11</Month>
      <Day>5</Day>
      <Hour>15</Hour>
      <Minute>15</Minute>
      <Second>51</Second>
   </TimeStamp>
   <DacPts>30</DacPts>
   <!--freq;dacNum-->
   <Coefficients>
      <Point_0>12420000;5632</Point_0>
      <Point_1>13000000;5632</Point_1>
      <Point_2>21300000;5760</Point_2>
      <Point_3>50000000;5760</Point_3>
      <Point_4>100000000;4864</Point_4>
      <Point_5>200000000;4608</Point_5>
      <Point_6>300000000;4480</Point_6>
      <Point_7>400000000;4480</Point_7>
      <Point_8>500000000;4480</Point_8>
      <Point_9>600000000;5248</Point_9>
      <Point_10>700000000;5248</Point_10>
      <Point_11>750000000;5376</Point_11>
      <Point_12>800000000;5376</Point_12>
      <Point_13>900000000;4992</Point_13>
      <Point_14>1000000000;5376</Point_14>
      <Point_15>1125000000;5504</Point_15>
      <Point_16>1250000000;5760</Point_16>
      <Point_17>1375000000;6016</Point_17>
      <Point_18>1499000000;6144</Point_18>
      <Point_19>1499001000;5376</Point_19>
      <Point_20>1625000000;2048</Point_20>
      <Point_21>1750000000;2112</Point_21>
      <Point_22>1875000000;2304</Point_22>'
      <Point_23>2000000000;448</Point_23>
      <Point_24>2100000000;512</Point_24>
      <Point_25>2200000000;640</Point_25>
      <Point_26>2250000000;704</Point_26>
      <Point_27>2300000000;704</Point_27>
      <Point_28>2400000000;704</Point_28>
      <Point_29>2512349999;512</Point_29>
   </Coefficients>
</LowBand>
```


Changed values are highlighted in larger **bold** face font.

Figure 5-14. Location of Low Band DAC values that require modification

High Band LO Level Optimization

Note	This High Band LO Level Optimization procedure is only for **A111 LO Distribution Module – ND70081 – 66270**.

The following steps are used to reduce excessive high level noise or spikes between 2.5 GHz and 5 GHz.

Note	To use this optimization procedure, the VectorStar VNA must have Version 1.2 VectorStar Application software installed. The version number is displayed on the start up splash screen when you turn on VectorStar. You can also display the version information at any time by using the top menu bar and navigating to **MENU BAR | 8. Help | HELP Drop-Down Menu | 3. About VectorStar**. The VectorStar Application Software may be downloaded from the VectorStar Users Site at **http://www.us.anritsu.com/VectorStar** Then navigate to the VectorStar Users Site.

40. Connect a through cable between VNA Port 1 and Port 2.

41. Set up the VNA as follows:

a. Press the **Preset** key on the front panel and click the OK button on the dialog box to reset the instrument.

b. Click the Trace Icon on the Icon Toolbar and change # of Traces to 6.

c. Click on Trace Layout button on the right-side menu and select the 3 row/2 column display. Refer to Figure 5-15, “TRACE LAYOUT Menu” on page 5-30 above.

d. Click on Tr1 on the upper left corner of the display to select Trace 1.

e. Click on Display Icon on the Icon Toolbar and then change the Trace Format to Log Mag.

f. Click on Tr2 on the display to select Trace 2.

g. Change the Trace Format to Log Mag.

h. Change the Trace Format of Tr3, Tr4, Tr5, Tr6 to Log Mag.

i. Click on Tr1 and then press the Response key on the front panel. Select User-defined, and change Numerator to A1, Denominator to 1 and Driver Port to Port 1. Click Back to return to previous menu.

j. Click on Tr2 and then select User-defined. Change:

- Numerator to B2
- Denominator to 1
- Driver Port to Port 1. Click Back to return to previous menu.

k. Click on Tr3 and then select User-defined. Change:

- Numerator to A2
- Denominator to 1
- Driver Port to Port 2. Click Back to return to previous menu.

l. Click on Tr4 and then select User-defined. Change:

- Numerator to B1
- Denominator to 1
- Driver Port to Port 2. Click Back to return to previous menu.

m. Click on Tr5 and then select S21.

n. Click on Tr6 and then select S12.

o. Press the **Scale** key on the front panel and set Tr1, Tr2, Tr3, and Tr4 to:

- Reference Value of –20 dB
- Resolution of 5dB/Div
- Reference Position of 5.

p. Set Tr5 and Tr6 to:

- Reference Value of 0 dB
- Resolution of 0.1 dB/Div
- Reference Position of 2

42. Press the **Frequency** key on the front panel. Then set the Start, Stop and # of Points per the values listed in the first row of Table 5-3, "High Band LO Level Optimization Set Up" on page 5-30 below.

43. Press the **Avg** key on the front panel and change IFBW to 1 kHz.

44. Select Tr5.

45. Press the **Display** key on the front panel and select View Trace.

46. Select Store Data to Memory and then Data, Memory Math. Ensure that Data Mem. Op. is set to [Data/Mem.].

47. Select Tr6 and then repeat Step #45 and Step #46 for Tr6.

Procedure Branch

48. Observe if there are spikes greater than ~0.02 dB on Tr5 and Tr6 and do one of the two steps below:

- If there are no spikes greater than 0.02 dB, skip ahead to Step #52 on page 5-29 below.
- If there are spikes greater than 0.02 dB, do Step #49 on page 5-28 below.

Spikes >0.02 dB

49. Do the following sub-procedure if there are spikes greater than ~0.20 dB:

- **a.** Press the **Marker** key on the front panel. Turn Mkr 1 ON and put the marker on the spike and note the frequency at which it occurs.
- **b.** On the MS4640A Series VNA, access the HARDWARE CAL menu as described above in Section 5-4, "Adjustment Setup" on page 5-7.
- **c.** Select Save Cal and then Src LO Level Cal to save the LO Cal Table data file ("`LOCal.slc`") to the default `Data` folder.
- **d.** Open Windows Explorers and navigate to `C:\AnritsuVNA\Data` folder.
- **e.** Open the "`LOCal.slc`" file with Notepad.
- **f.** Locate the <HighBand> section. See Figure 5-16, "Location of High Band DAC values that require modification" on page 5-31 for the highlighted code statement that need modification.
- **g.** If the problem frequency is nearer one frequency point than the next, modify the DAC value of the frequency to which it is closer. If the problem frequency falls near the middle of two frequencies, then it may be necessary to modify the DAC values on both sides.
- **h.** Start by increasing the DAC value by 300 counts per attempt (up to a total change of 2100 from the starting value).
- **i.** Save the file as "`LOCal_new1.slc`."

Note	When using Notepad, add quotation marks (") around the new file name; otherwise, Notepad will append ".txt" to the file name.

- **j.** Select Recall Cal and then Src LO Level Cal to load the new modified data from "`LOCal_new1.slc`" back to the internal memory of the instrument.
- **k.** Select Tr5.
- **l.** Press the **Display** key on the front panel and select View Trace.
- **m.** Select Store Data to Memory and then Data, Memory Math. Ensure that Data Mem. Op. is set to [Data/Mem.].
- **n.** Repeat Step #49-l (letter L) through Step #49-m in the sub-procedure above for Tr6.
- **o.** If the dips in the traces of Tr1 through Tr4 do not improve or the spikes in Tr5 and Tr6 traces do not improve, then open the "`LOCal_new1.slc`" file and repeat Step #49-f through Step #49-n.
- **p.** Repeat until there are no spikes in the Tr5 and Tr6 traces of greater than ~0.02 dB.

Note	A starting DAC value of 14000 indicates that there is likely a problem with the source module or the LO module. The DAC numbers will range from 0 to 16250 for high band with 16250 denoting the DAC is railed high (maximum power). If increasing the value does not work, then revert to the original values, or recall the original cal, and start decreasing the DAC value by 300 counts (up to a total change of 2100 from the starting value). If this cannot be achieved before reaching a total change of 2100 increments or decrements, then there may be a problem with the Source Module or the LO Module.

50. Press the **Avg (Average)** key on the front panel and change IFBW to 10 kHz.

51. Repeat Step #44 on page 5-27 through Step #48.

No Spikes > ~0.02 dB

52. Repeat Step #42 on page 5-27 through Step #48 for the setup parameters listed in the next 13 rows of Table 5-3, "High Band LO Level Optimization Set Up" on page 5-30 below.

53. After the last modification to the LO Cal Table data has been done, re-check every setup listed in Table 5-3 to insure that no spike is greater than ~0.02 dB.

54. Open the "`LOCal_new1.slc`" file with Notepad, increase the DAC values between 2.5 and 5 GHz by 100 counts and then load the modified data back to the instrument. Re-check every setup listed in Table 5-3 below to insure that no spike is greater than ~0.02 dB.

55. Open the "`LOCal_new1.slc`" file with Notepad, decrease the DAC values between 2.5 and 5 GHz by 200 counts and then load the modified data back to the instrument. Re-check every setup listed in Table 5-3 below to insure that no spike is greater than ~0.02 dB.

56. If the instrument shows no spikes in both Step #53 on page 5-29 and Step #54, open the "`LOCal_new1.slc`" file with Notepad, increase the DAC values between 2.5 and 5 GHz by 100s count and then load the modified data back to the instrument.

57. If the instrument shows spikes in either Step #53 and Step #54, modify the DAC count in the direction that the mid-point can be found. The objective is to have ±100 count margin in the DAC value.

58. Re-check every setup listed in Table 5-3, "High Band LO Level Optimization Set Up" on page 5-30 below to insure that no spike is greater than ~0.02 dB.

59. This completes the High Band LO Level Optimization procedures.

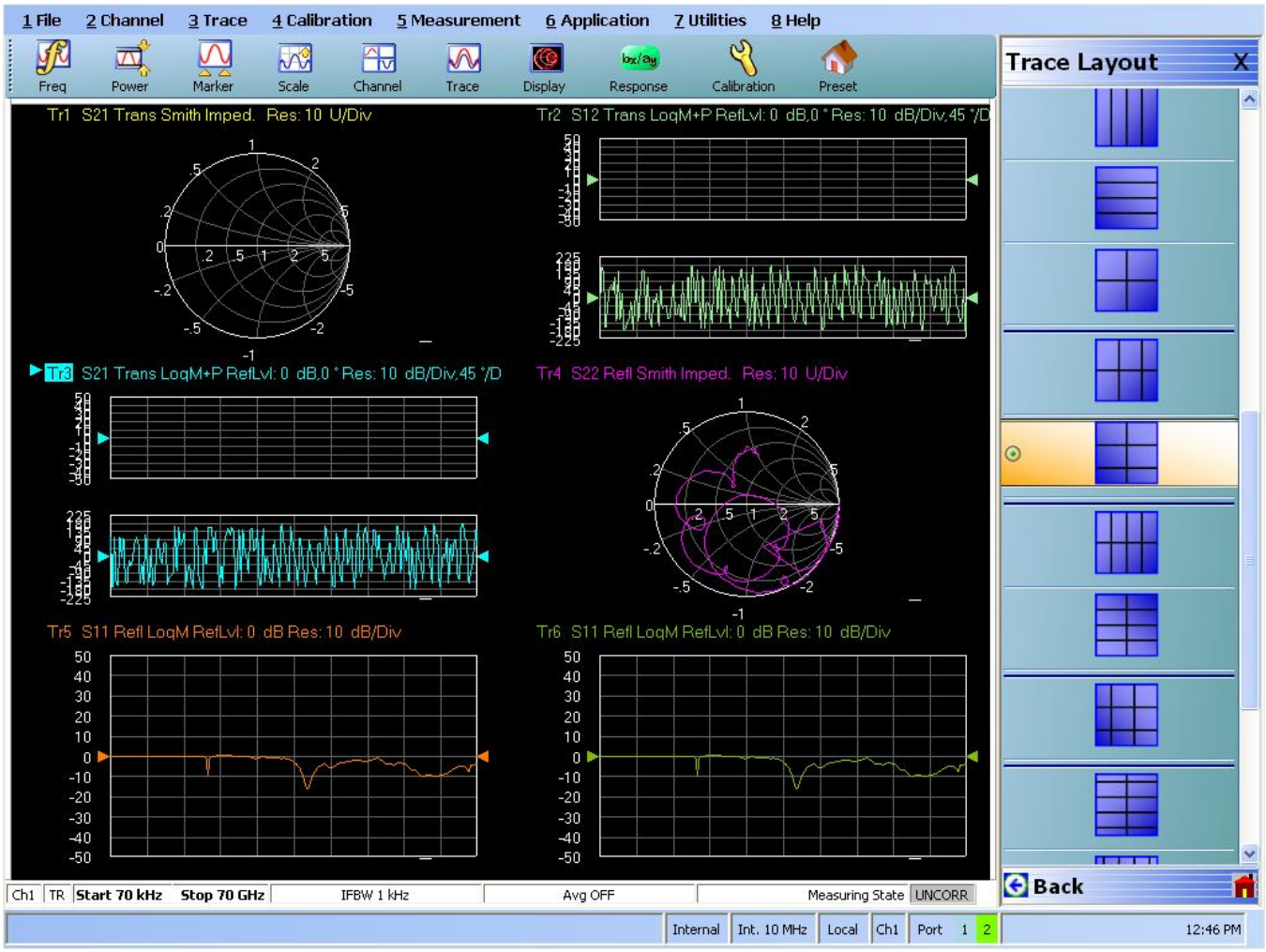

Figure 5-15. TRACE LAYOUT Menu

Table 5-3. High Band LO Level Optimization Set Up (1 of 2)

Start (GHz)	Stop (GHz)	# of Points
2.5	3.5	21
2.5	3.5	51
2.5	3.5	101
2.5	3.5	201
2.5	3.5	401
2.5	3.5	801
2.5	3.5	1601
2.5	5	21
2.5	5	51
2.5	5	101
2.5	5	201

Table 5-3. High Band LO Level Optimization Set Up (2 of 2)

Start (GHz)	Stop (GHz)	# of Points
2.5	5	401
2.5	5	801
2.5	5	1601


```
<?xml version="1.0"?>
<!--Cal saved on: 8/13/2009 2:02:28 PM-->
<HardwareCal CalType="LOCal" PC_Version="1.0.2" DSP_Version="1.0.3">
   <HighBand>
      <CalVersion>1</CalVersion>
      <CheckSum>277</CheckSum>
      <TimeStamp>
         <Year>2008</Year>
         <Month>11</Month>
         <Day>6</Day>
         <Hour>17</Hour>
         <Minute>0</Minute>
         <Second>20</Second>
      </TimeStamp>
      <DacPts>82</DacPts>
      <!--freq;dacNum-->
      <Coefficients>
         <Point_0>2512350000;12220</Point_0>
          <Point_1>2600000000;11015</Point_1>
          <Point_2>2700000000;10000</Point_2>
          <Point_3>2800000000;9750</Point_3>
          <Point_4>2900000000;12530</Point_4>
          <Point_5>3000000000;11765</Point_5>
          <Point_6>3100000000;15950</Point_6>
          <Point_7>3175000000;9035</Point_7>
          <Point_8>3175001000;9035</Point_8>
          <Point_9>3200000000;9035</Point_9>
          <Point_10>3300000000;11170</Point_10>
          <Point_11>3400000000;12495</Point_11>
          <Point_12>3500000000;9815</Point_12>
          <Point_13>3600000000;7670</Point_13>
          <Point_14>3700000000;8385</Point_14>
          <Point_15>3800000000;10465</Point_15>
          <Point_16>3900000000;10400</Point_16>
          <Point_17>4000000000;8345</Point_17>
          <Point_18>4100000000;7215</Point_18>
          <Point_19>4200000000;8060</Point_19>
          <Point_20>4300000000;9295</Point_20>
          <Point_21>4400000000;8905</Point_21>
          <Point_22>4500000000;7605</Point_22>
          <Point_23>4600000000;7800</Point_23>
          <Point_24>4700000000;8840</Point_24>
          <Point_25>4800000000;9685</Point_25>
          <Point_26>4900000000;7930</Point_26>
          <Point_27>5012350000;6890</Point_27>
```


Figure 5-16. Location of High Band DAC values that require modification

5-8 SQM Power Adjustment (SQM Power Cal)

The adjustment insures that the SQM drive signal is at optimum level. This adjustment is required for MS4645A and MS4647A only.

Equipment Required

- Anritsu ML2438A Power Meter
- Anritsu SC7770 Power Sensor or Anritsu MA24005A Power Sensor
- Anritsu 34NK50 N (m) to K (m) Adapter
- Anritsu 34VFKF50 V (f) to K (f) Adapter
- Anritsu 43KC-20 20 dB Fixed Attenuator

Caution	Do not disconnect the output cable of the A113 5-20 GHz Doubler Module from the input of the A114 SQM at any time that RF power is applied to the 5-20 GHz Doubler Module. This will damage the 5-20 GHz Doubler Module. Follow the steps in the adjustment procedure closely to prevent damage to the 5-20 GHz Doubler Module.

Procedure

1. Remove the outer cover and lay the VNA with its left side down on an anti-static safe workstation.
2. Connect a **GPIB Interface cable** between the Power Meter GPIB port and the VNA Dedicated GPIB port.
3. Warm up the VNA and Power Meter for at least 90 minutes.
4. On the MS4640A Series VNA, access the HARDWARE CAL menu as described above in Section 5-4, “Adjustment Setup” on page 5-7.
5. Select the SQM Cal button and the SQM CALIBRATION dialog box appears as shown in Figure 5-17, “SQM Power Cal Dialog Box” on page 5-33 below. Do not start the calibration yet.
6. Disconnect the RF semi-rigid cable from the J14 HB OUT connector of the RF Source Module as shown in Figure 5-11, “High Band LO Cal Point for a2 on the A103 Sampler J2 connector” on page 5-19 above. This is done to prevent damage to the 5-20 GHz Double Module.

7. Disconnect the 5-20 GHz Doubler Module output RF semi-rigid cable from J1 Input connector of the A114 SQM as shown in Figure 5-18 below.

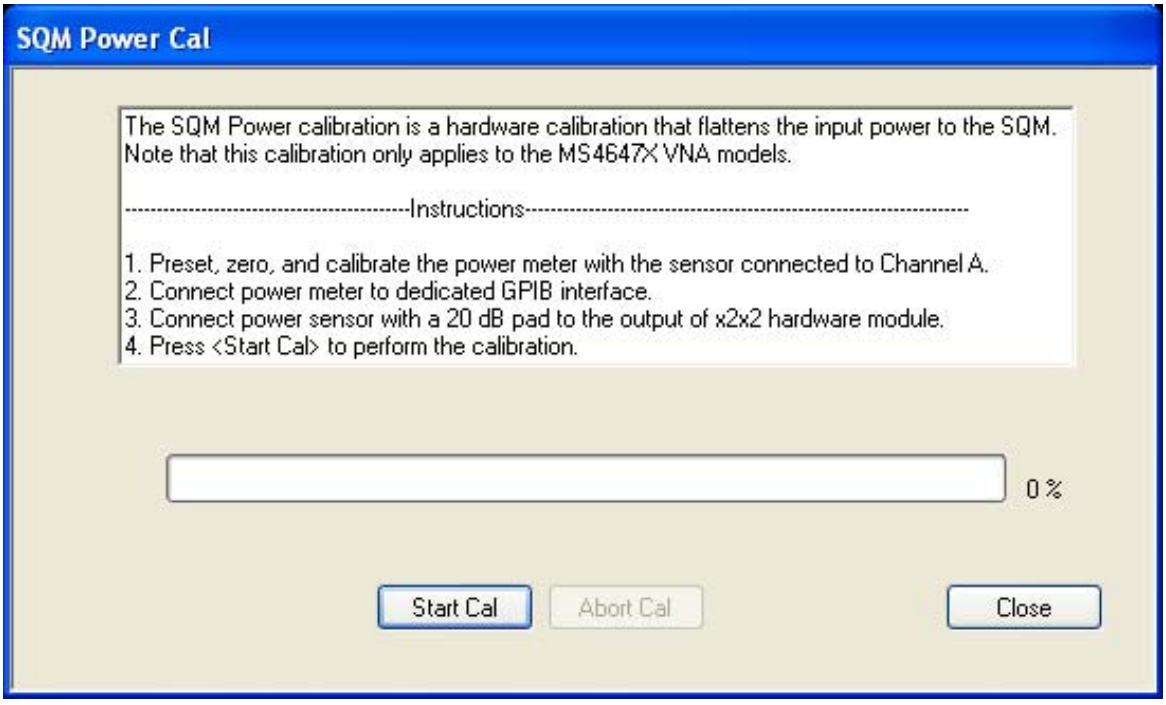

Figure 5-17. SQM Power Cal Dialog Box

8. On the power meter, connect the **34NK50 Adapter** to the Calibrator output and connect the **34VFKF50 Adapter** to the power sensor input. Then, perform a ZERO/CAL on the power sensor.
9. Disconnect the Power Sensor with the **34VFKF50 Adapter** from the Power Meter Calibrator output.
10. Connect the **20 dB attenuator** to the adapter at the power sensor input and then connect the power sensor to the open end of 5-20 GHz Doubler Module output RF semi-rigid cable.
11. Re-connect the RF semi-rigid cable to the J14 HB OUT connector of the RF Source Module.
    - See Figure 5-11 on page 5-19 above.
12. Click on Start Cal to begin calibration. When the calibration is complete at 100%, click the Close button to close the SQM Calibration dialog.
13. Disconnect the RF semi-rigid cable from the J14 HB OUT connector of the RF Source Module. This is done to prevent damage to the 5-20 GHz Double Module.
    - See Figure 5-11 on page 5-19 above.
14. Disconnect the power sensor with the 20 dB attenuator from the 5-20 GHz Doubler Module Output RF semi-rigid cable.
15. Re-connect the RF semi-rigid cable to J1 Input connector of the SQM and then re-connect the RF semi-rigid cable to J14 HB OUT connector of the RF Source Module.
    - See Figure 5-11 on page 5-19 above.
16. SQM calibration is now complete.
17. Power off the VNA and re-install the outer cover.

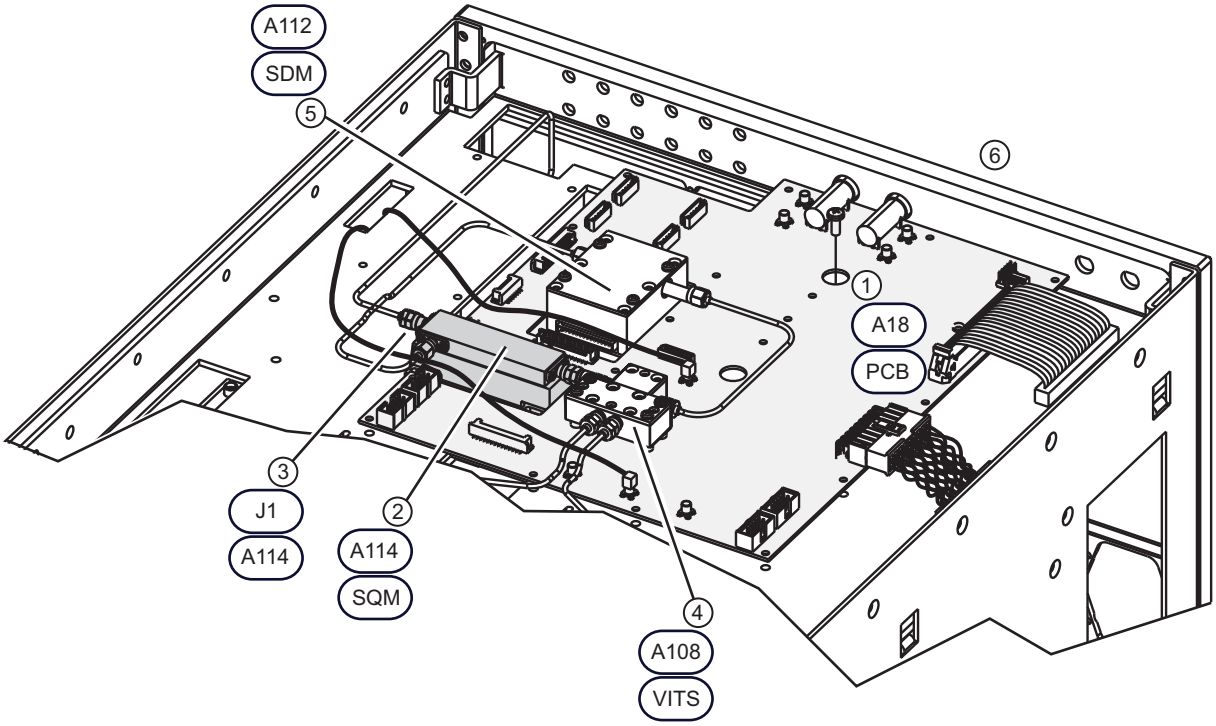

RF Deck Bottom Side – MS4647A VNA equipped with Option 062 1. A18 RF Component Control PCB Assembly – ND70068 – 61929-3 2. A114 Switched Quadrupler Module (SQM) – ND70080 – 60-327 3. A114 SQM J1 – J1 Input Connector	4. A108 V Integrated High Band Transfer Switch (VITS) – ND70093 – 66619 5. A112 Switched Doubler Module (SDM) – ND70098 – 59772 6. RF Deck Rear Panel

Figure 5-18. Location of A114 SQM J1 Input Connector

5-9 Source Auto Leveling Control Adjustment (ALC Cal)

The Source ALC adjustment insures that the overall system power levels at Port 1 and Port 2 are flat across the full frequency band of the VNA.

There are three adjustments:

- ALC Offset Cal
- Port 1 ALC Cal
- Port 2 ALC Cal

Equipment Required

- Anritsu ML2438A Power Meter
- Anritsu SC7770 Power Sensor
- For Models MS4645A and MS4647A:
  - Anritsu 33VFVF50C V (f) to V (f) Adapter
  - Pasternack PE9718 N (m) to V (m) Adapter
- For Models MS4642A and MS4644A:
  - Anritsu 34NK50 N (m) to K (m) Adapter
  - Anritsu 34VFKF50 V (f) to K (f) Adapter
- GPIB Interface Cable

Procedure

1. Connect the GPIB interface cable between the VNA Dedicated GPIB port and the Power Meter GPIB port.
2. Warm up the VNA and Power Meter for at least 90 minutes.
3. Preset the VNA.
4. On the MS4640A Series VNA, access the HARDWARE CAL menu as described above in Section 5-4, “Adjustment Setup” on page 5-7.

5. Select the ALC Cal button and the ALC CAL menu appears as shown in Figure 5-19.

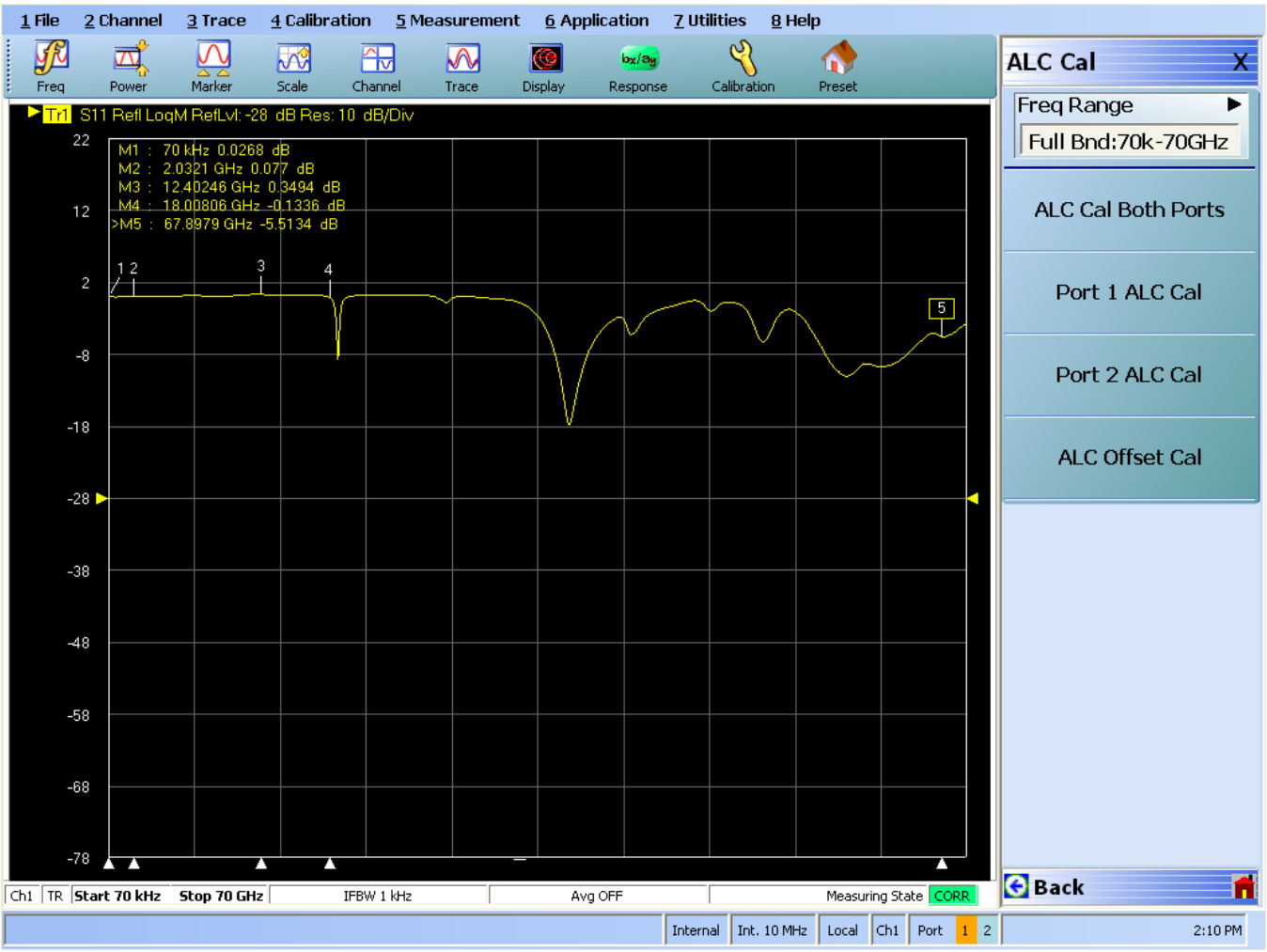

Figure 5-19. ALC Cal Menu

ALC Offset Cal

6. Select the ALC Offset Cal button and the ALC OFFSET CAL dialog box appears (Figure 5-20).

7. Select the Start Cal button to begin the calibration. Click on the Close button when done.

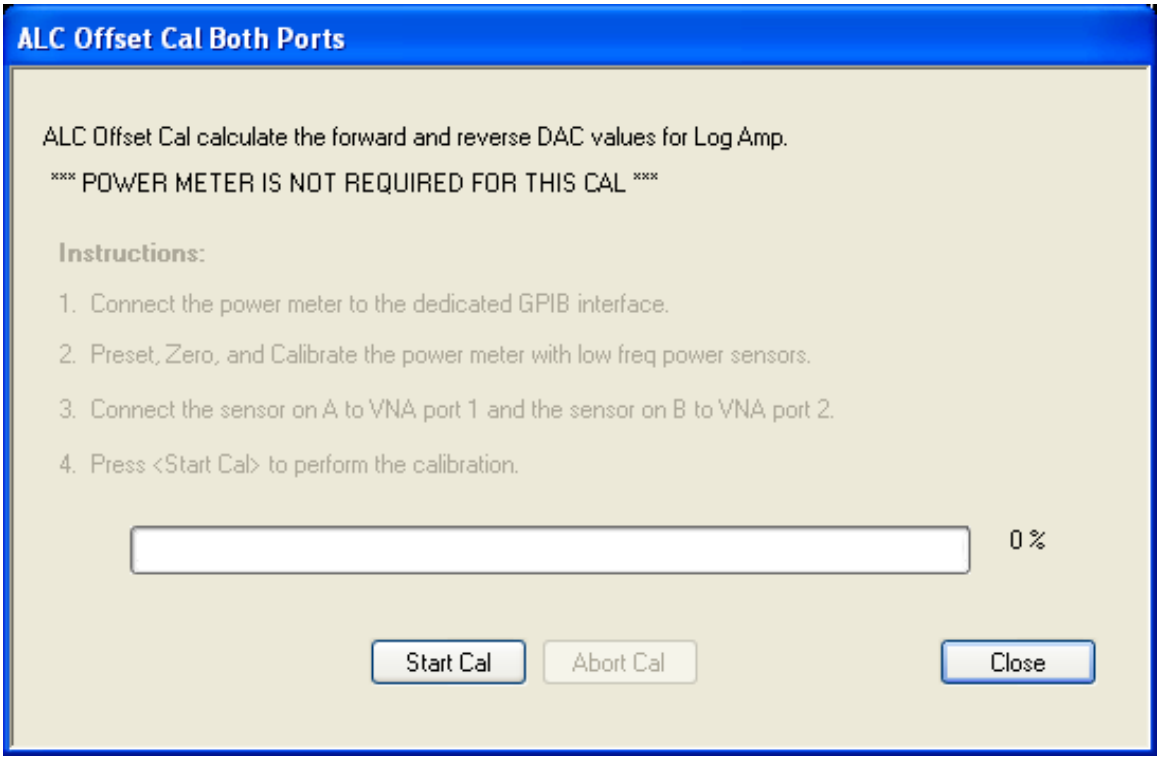

Figure 5-20. ALC OFFSET CAL Dialog Box

Port 1 ALC Cal

8. Zero and calibrate the Power Sensor with the Power Meter.
9. On the VNA, select the Port 1 ALC Cal button.
10. When the Port 1 ALC Cal dialog box appears, select the appropriate power sensors for power meter output channels (Figure 5-21, “PORT 1 ALC CAL (FULL BAND) Dialog Box” on page 5-38). Be sure to select A – Full Range Power Sensor.
11. Connect the Power Sensor to VNA Port 1.
12. Select the Start Cal button to perform calibration. Click on the Close button when done.

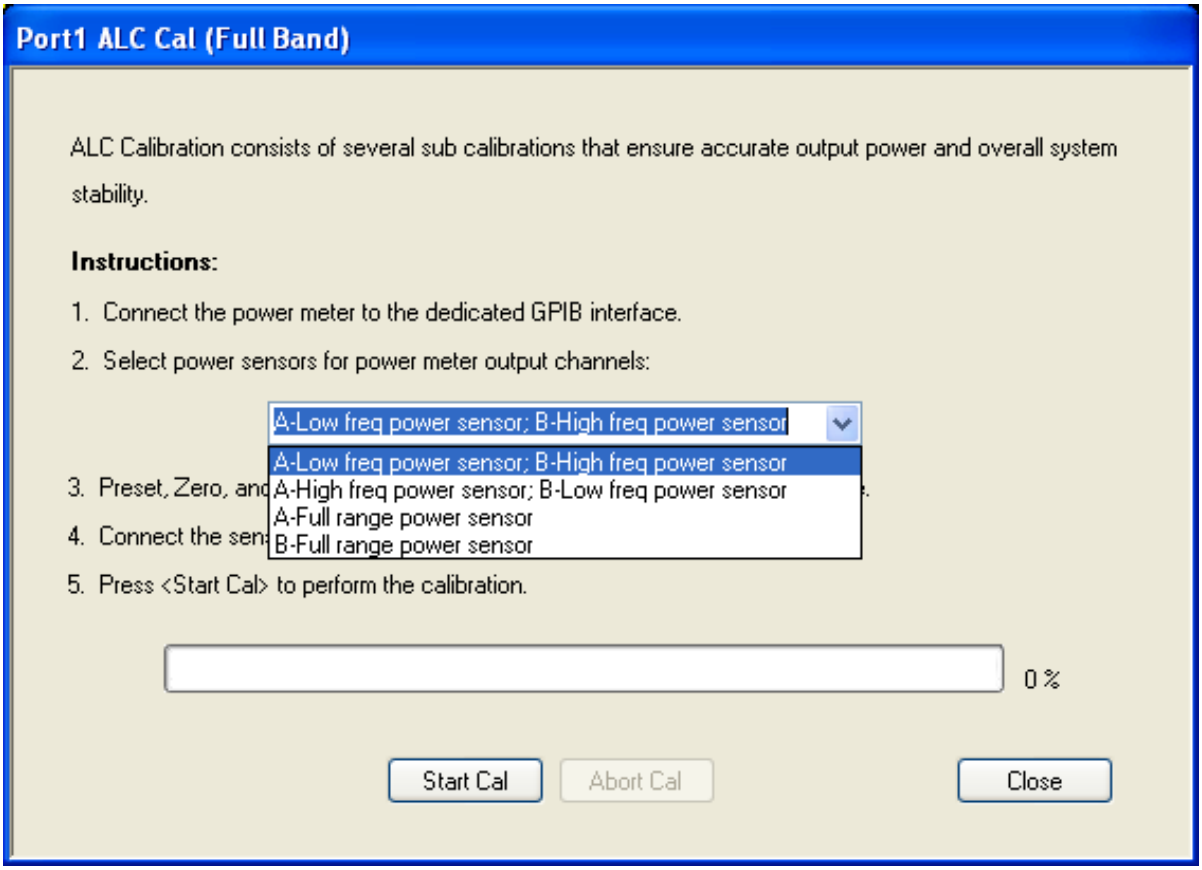

Select "**A-Full range power Sensor**" for instruction step #2.

Figure 5-21. PORT 1 ALC CAL (FULL BAND) Dialog Box

Port 2 ALC Cal

13. Zero and calibrate the Power Sensor with the Power Meter.

14. On the VNA, select the Port 2 ALC Cal button.

15. When the Port 2 ALC Cal dialog box appears, select the appropriate power sensors for power meter output channels (Figure 5-22). For example, Select A – Full Range Power Sensor and connect the Power Sensor to VNA Port 2.

16. Select the Start Cal button to perform calibration. Click on the Close button when done.

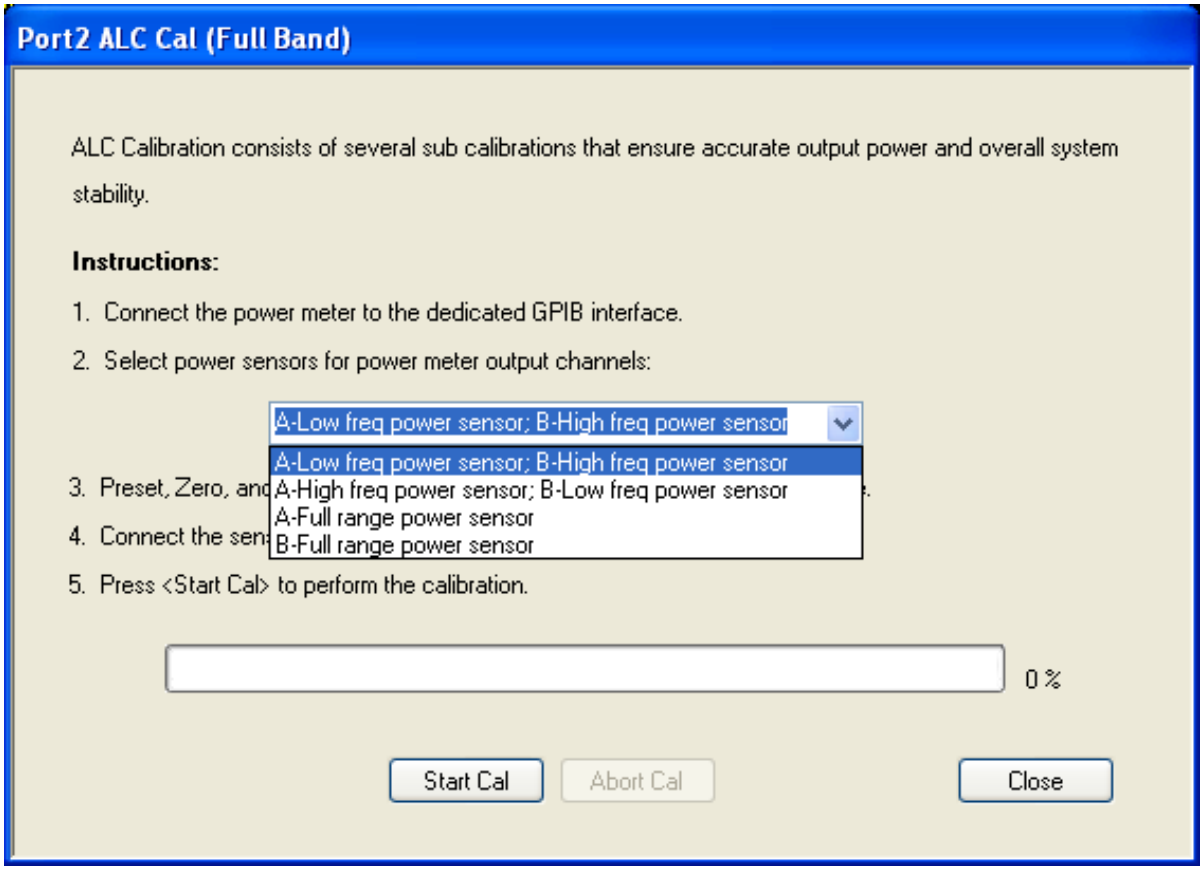

Figure 5-22. Port 2 ALC Calibration

5-10 Analog In Adjustment (Analog In Cal)

This calibration adjusts the offset and gain range of the analog inputs.

Equipment Required

- None

Procedure

1. Warm up the VNA for at least 90 minutes.
2. On the MS4640A Series VNA, access the HARDWARE CAL menu as described above in Section 5-4, "Adjustment Setup" on page 5-7.
3. Select Analog In Cal button and the Calibration Progress dialog box appears as shown below in Figure 5-23.
4. The dialog box will close by itself when the calibration is complete successfully.

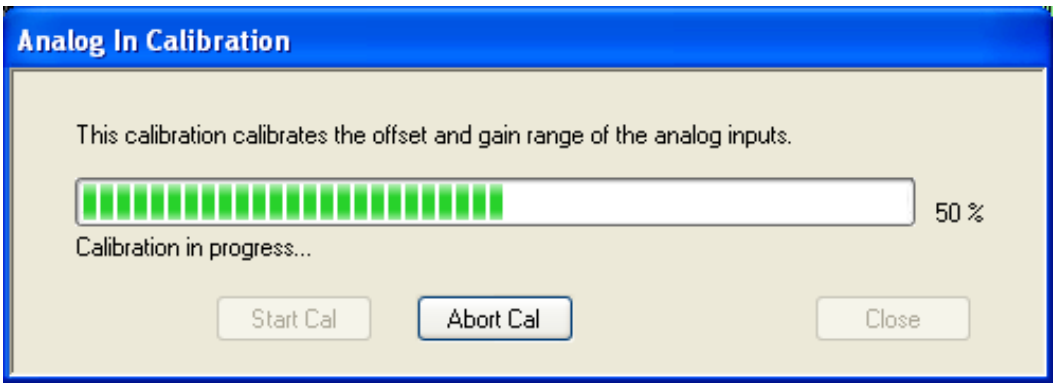

Figure 5-23. Analog In Calibration Progress Dialog Box

5-11 Factory RF Calibration (RF Cal)

The Factory RF Calibration represents a subset of a 12 term calibration so that simple reflection and transmission standards will read somewhat close to their true value even without a User Measurement Calibration.

Equipment Required

- Anritsu 3652A K Connector Calibration Kit (For MS4642A and MS4644A)
- Anritsu 3654D V Connector Calibration Kit (For MS4645A and MS4647A)
- Coaxial Through Line Cable, male to female
- Adapter, female to female

Procedure

1. Warm up the VNA for at least 90 minutes.
2. If the length of the through line cable is not known, perform the Length Determination Procedure described below in Section 5-14, "Through Line Length Determination Procedure" on page 5-50.
3. Preset the VNA and then access the FACTORY CAL menu as described above in Section 5-4, "Adjustment Setup" on page 5-7.
4. Select Modify Setup button under RF Cal and the Factory RF Cal Setup dialog box appears (Figure 5-24).

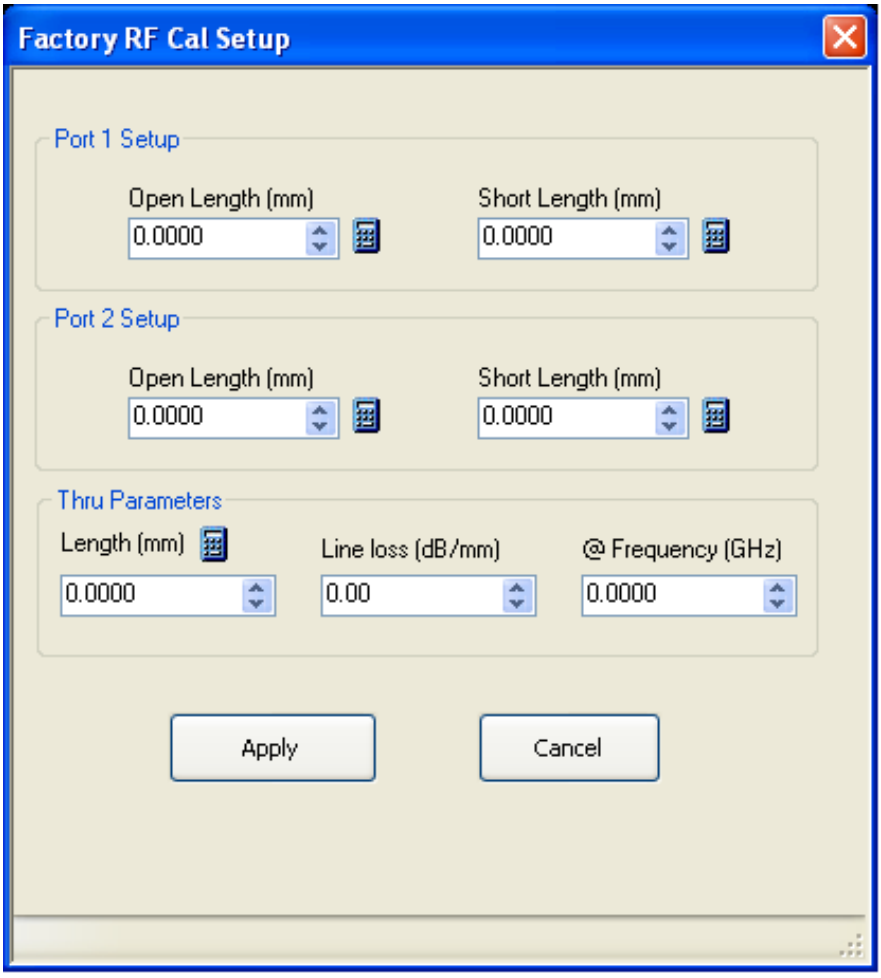

Figure 5-24. Factory RF Cal Setup Dialog Box

5. Change the parameters in the dialog box as shown in Table 5-4 below. Click the Apply button when done.

Table 5-4. Parameter Changes for Factory RF Calibration

For Model(s)	MS4642A / MS4644A VNAs	MS4645A/MS4647A VNAs
Open Length (mm)	5.00	4.75
Short Length (mm)	5.00	5.10
Thru Length (mm)	Actual length of through including adapters, if used.	Actual length of through including adapters, if used.
Line Loss (dB)	0.0009 After the value above is entered, it will round up to 0.01.	0.0009 After the value above is entered, it will round up to 0.01.
@ Frequency (GHz)	70 (not 40)	70

6. Select the Calibrate button and the FACTORY RF CAL dialog box appears (Figure 5-25).

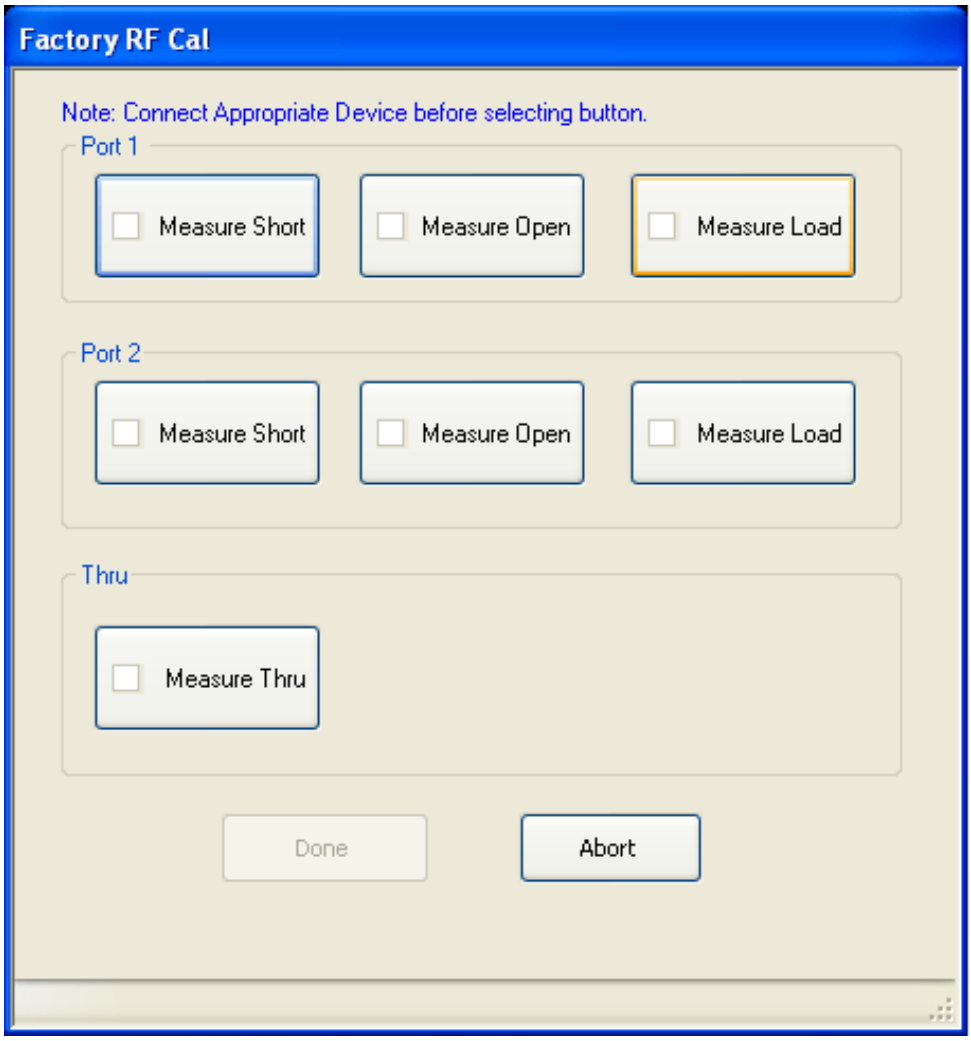

Figure 5-25. Factory RF Cal Dialog Box

7. Connect each calibration standard from the calibration kit in sequence to the appropriate port. Click the appropriate button when ready.
8. When all seven (7) calibration standards have been measured, click the Done button to complete.

5-12 Factory Receiver Calibration (Rcvr Cal)

The Factory Receiver Calibration is intended to allow the non-ratioed parameters to read out closer to absolute power levels without a user receiver calibration.

Equipment Required

- Coaxial Cable, male to female
- Adapter, female to female

Procedure

1. Warm up the VNA for at least 90 minutes.
2. Install the adapter to the male end of the coaxial cable.
3. Connect the coaxial cable between VNA Port 1 and VNA Port 2.
4. Access the FACTORY CAL menu as described above in Section 5-4, “Adjustment Setup” on page 5-7.
5. Select the Perform Rcvr Cal button.
6. When the FACTORY RECEIVER CAL dialog box appears (Figure 5-26), click on the Perform Measurement button to begin the calibration.
7. Click on the Done button when the calibration is done.

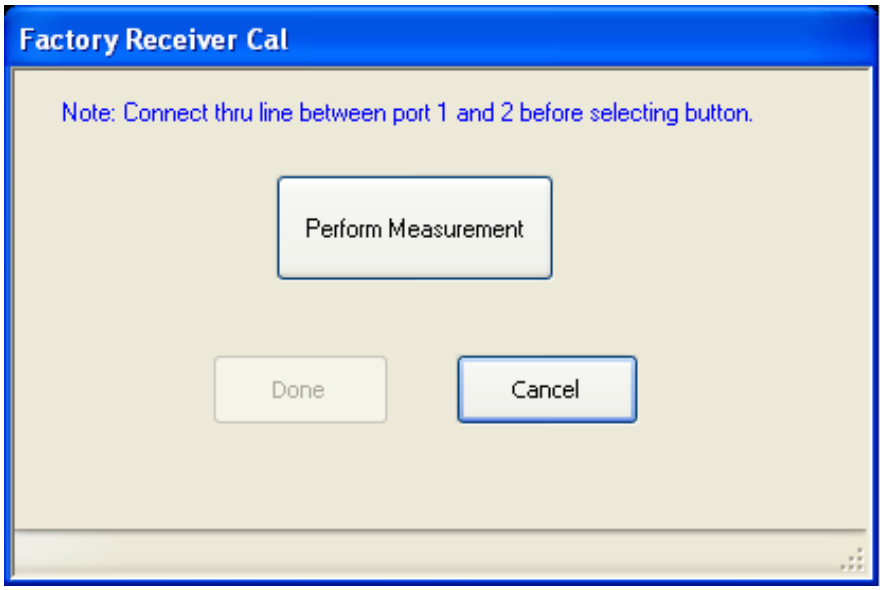

Figure 5-26. Factory Receiver Calibration Dialog Box

5-13 LCD Touch Panel Calibration Adjustments

The LCD touch panel calibration is used to align the touch screen coordinates with those of the LCD display.

Equipment Required

- None

Procedure

1. Exit the VectorStar application by selecting File from the Icon Tool Bar and then Exit from the drop down menu.
2. Do one of the following to start the LCD touch panel calibration dialog.
   - On the Windows Desktop of the VNA, click:
     Start | All Programs | Hampshire TSHARC Control Panel
   - On the VectorStar GUI, select:
     MAIN | System | SYSTEM | Utility | UTILITY | Calibrate Touch Screen | HAMPSHIRE TSHARC (TOUCHSCREEN) CONTROL PANEL Dialog Box
3. The HAMPSHIRE TSHARC CONTROL PANEL tabbed dialog box appears (Figure 5-28).

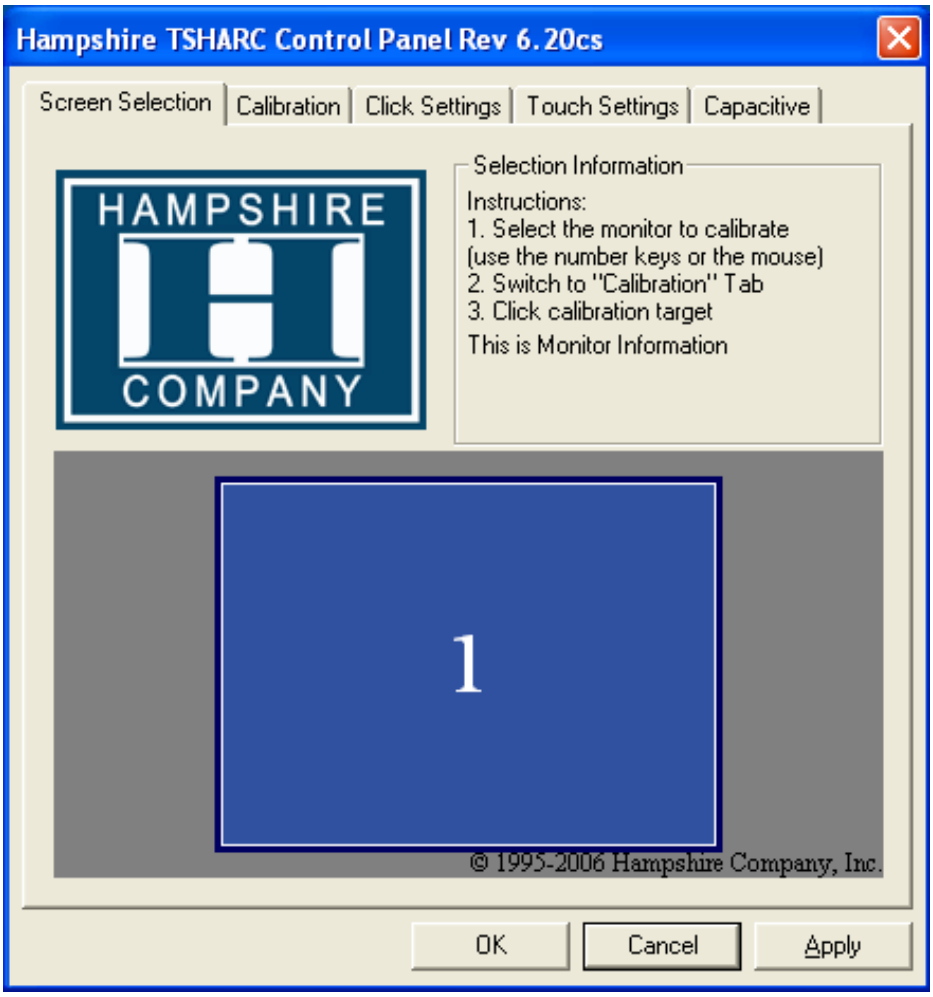

Figure 5-27. Hampshire TSHARC Control Panel

4. Select the Calibration tab and then click on the Configure button.

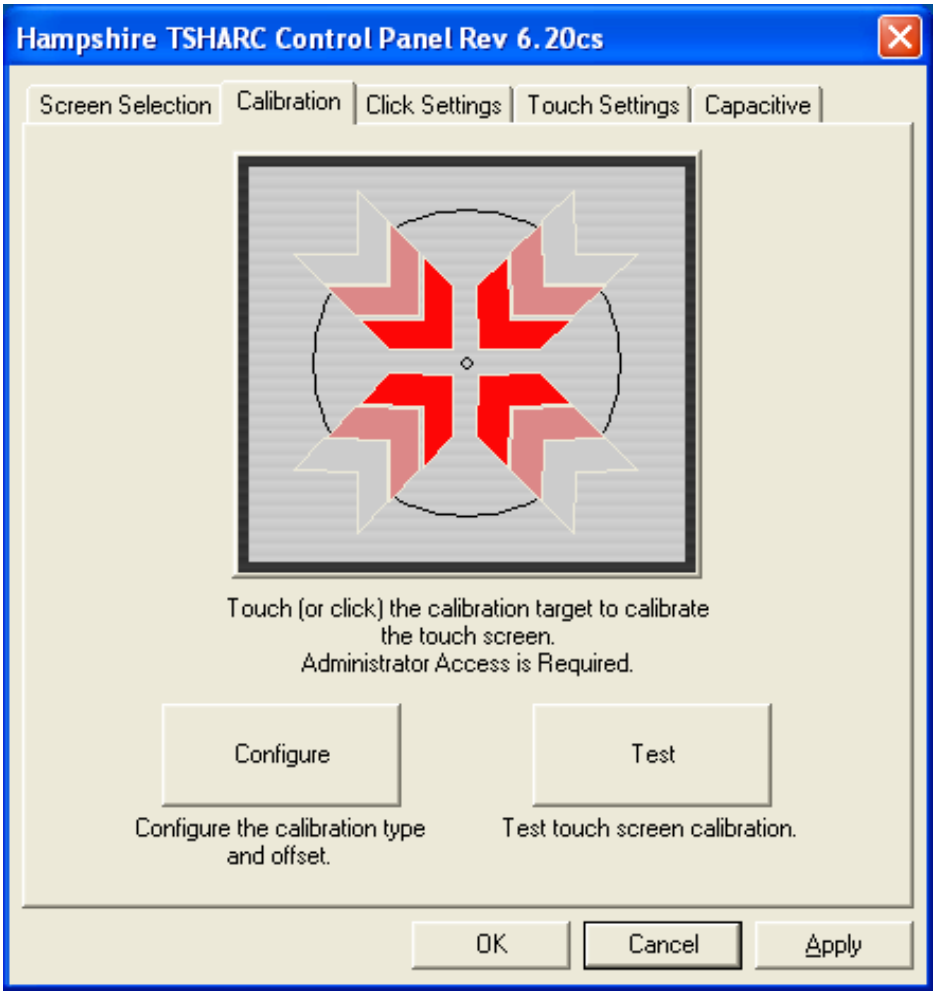

Figure 5-28. Hampshire TSHARC Control Panel - Calibration Tab

5. On the CALIBRATION OPTIONS dialog box, select 20 point calibration and 10% offset. Also click on the Inset Calibration Targets check box to enable the option (Figure 5-29).

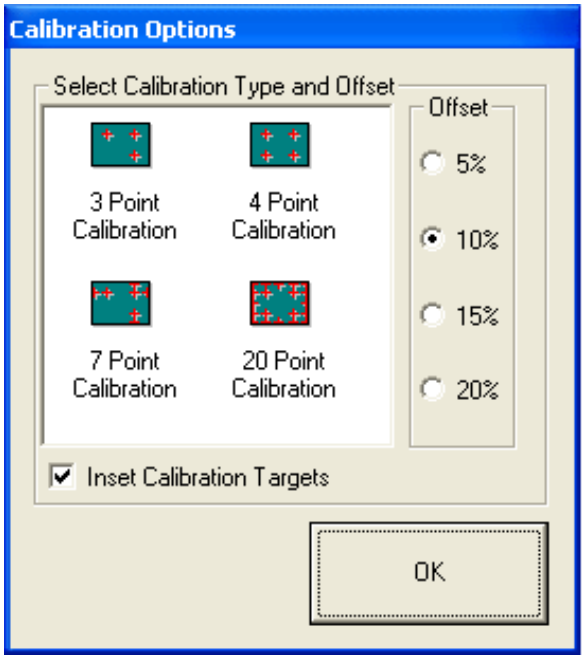

Figure 5-29. Hampshire TSHARC Control Panel, Calibration Options

6. Click the OK button to close the Calibration Options windows.

7. On Calibration tab window, use your finger to touch the red target symbol and the Calibration screen will appear (Figure 5-30).

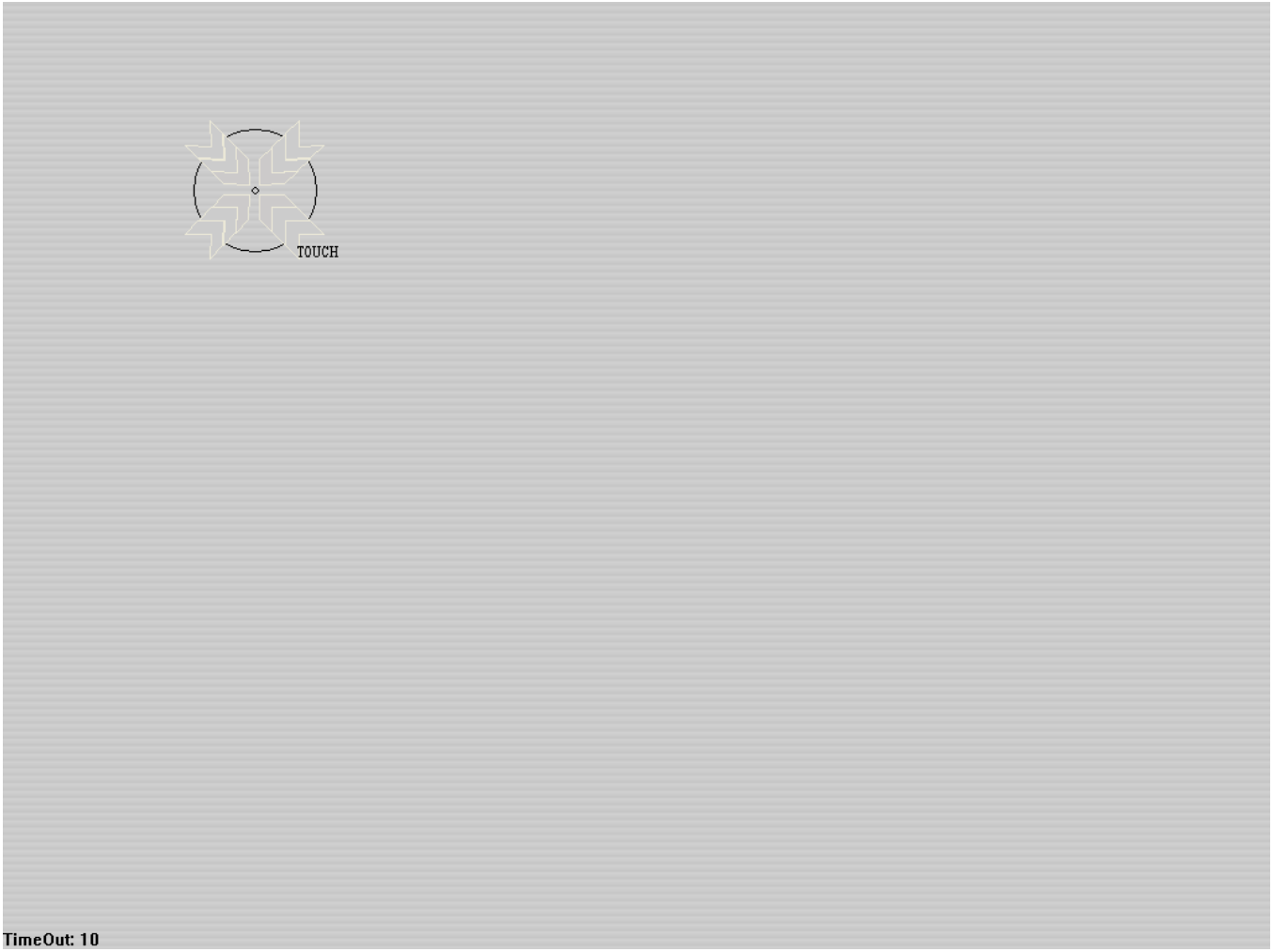

Figure 5-30. Calibration Screen with Target Symbol

8. Touch the target symbol with your finger and hold until the displayed word changes from TOUCH to HOLD to RELEASE. Then release your finger from the target symbol. Repeat until no more target symbols are displayed.

9. Next, the touch target movement verification screen will then appear (Figure 5-31). Use your finger to touch the screen and target symbol will appear at where your finger touches on screen.

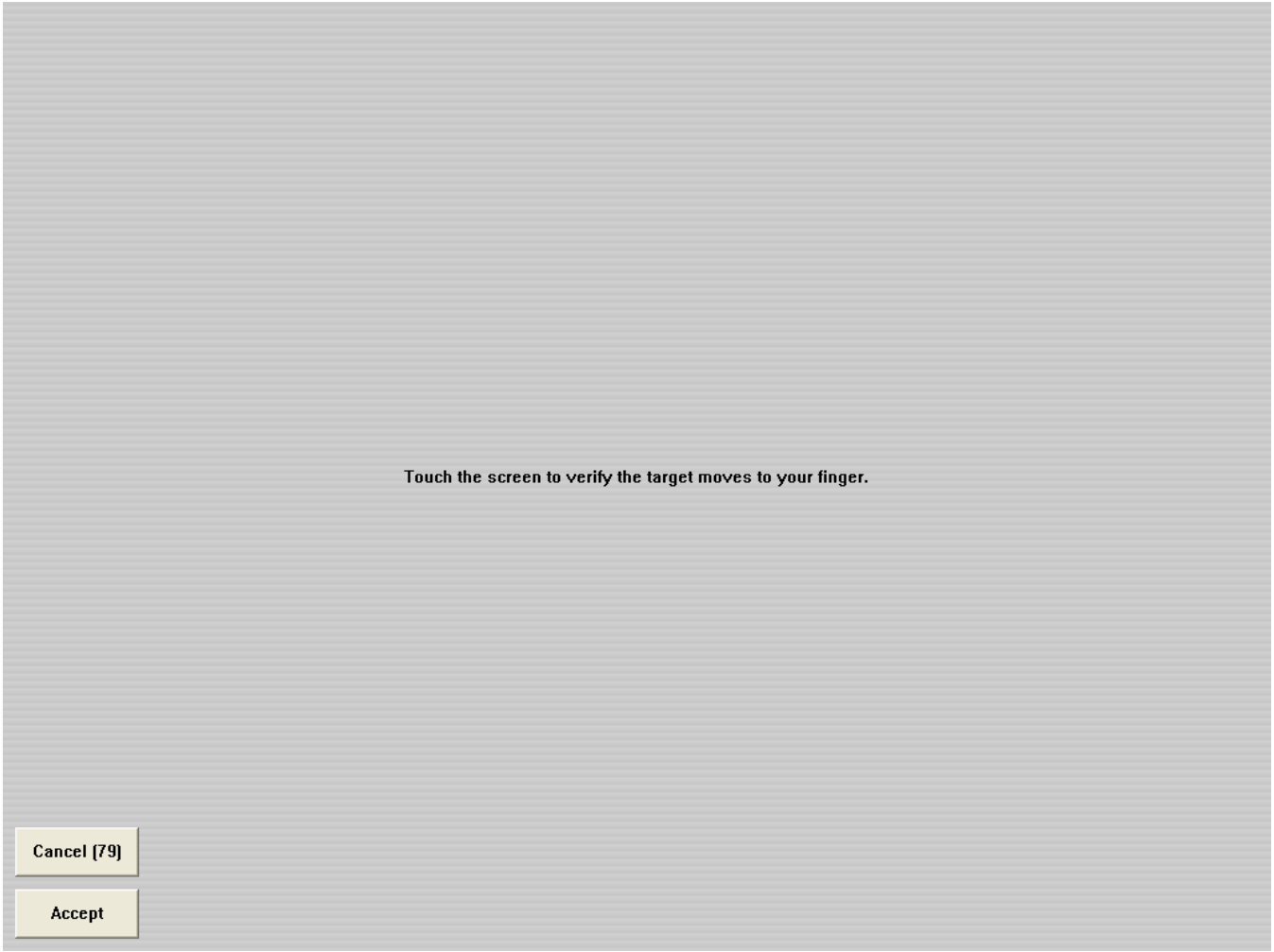

Figure 5-31. Touch Target Movement Verification Screen

10. Drag the target symbol across the screen and observe if the target symbol moves to the direction to which you have dragged.

11. Use the external mouse to click on the Accept button when done.

12. When the Hampshire TSHARC Control Panel re-appears, click the Apply button to apply the new calibration.

13. This completes the LCD Touch Panel Calibration adjustment.

5-14 Through Line Length Determination Procedure

This procedure is used to determine the length of the through line cable (including adapters) that is used for Factory RF Calibration.

Equipment Required

- Anritsu 3652A K connector Calibration Kit (For K connector cable)
- Anritsu 3654D V connector Calibration Kit (For V connector cable)

Procedure

1. Preset the VNA.
2. Press the **Frequency** key and set points to 801.
3. Press the **Calibration** key.
4. Insert the USB memory device from the calibration kit into the USB port on the front panel. The red indicator LED on the USB memory device will flash and then light constantly. A Windows Explorer window also appears on top of the VectorStar Application software (Figure 5-32). Click the red X button on the upper right corner to close the window.

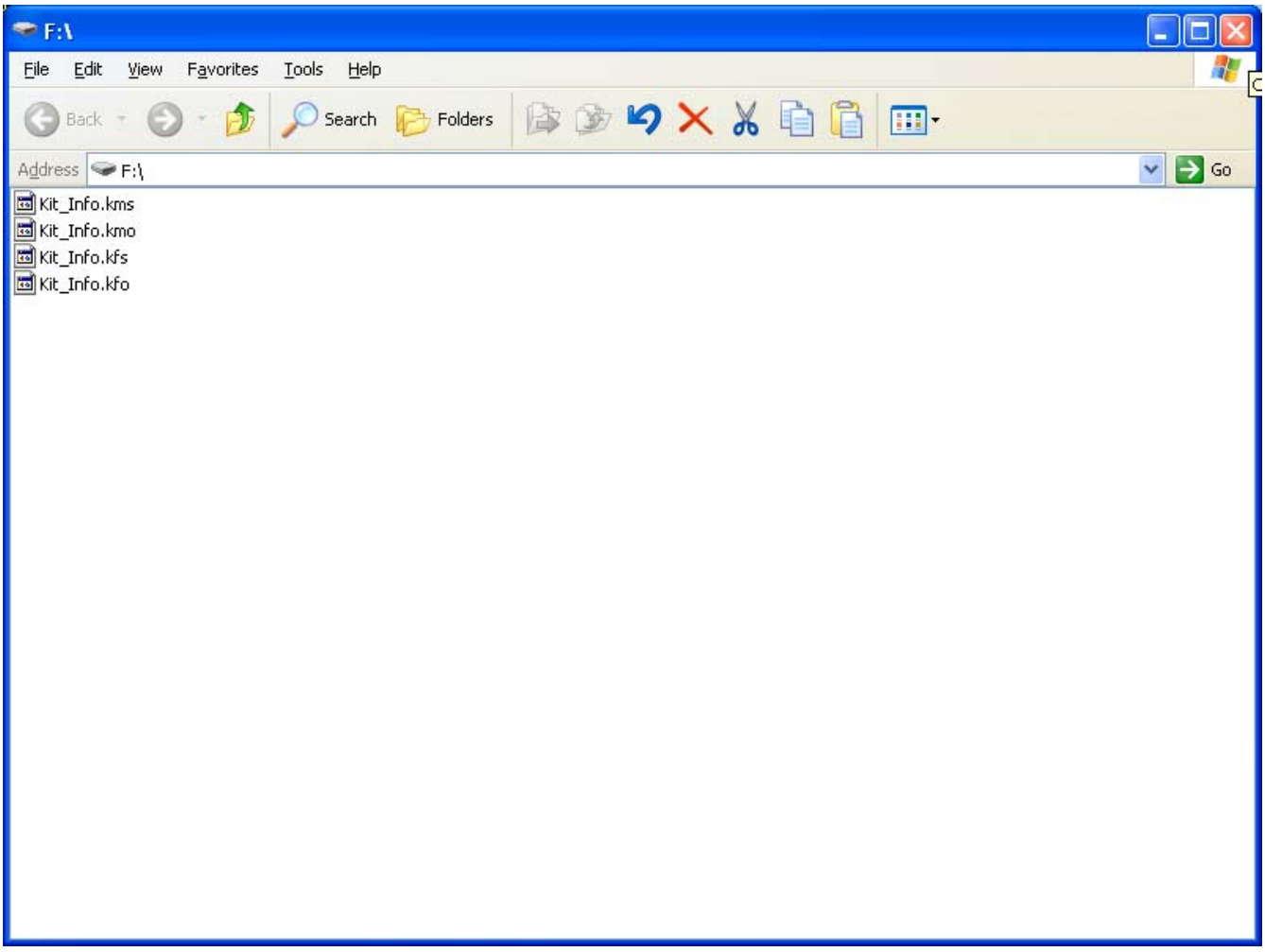

Figure 5-32. Windows Explorer Dialog Box

5. Select Cal Kit/AutoCal Characterization
6. Select Install Kit/Charac
7. The Install dialog box appears (Figure 5-33). Then, select the Cal Kit radio button, and click the browse button.

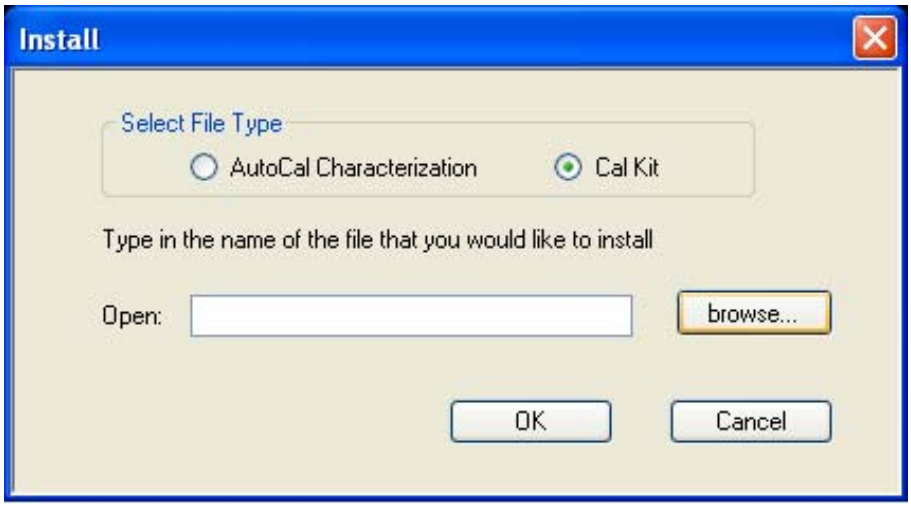

Figure 5-33. Install Dialog Box

8. Locate Removable Disk (x:), where x is the drive letter designated to the USB drive by Windows (Figure 5-33).

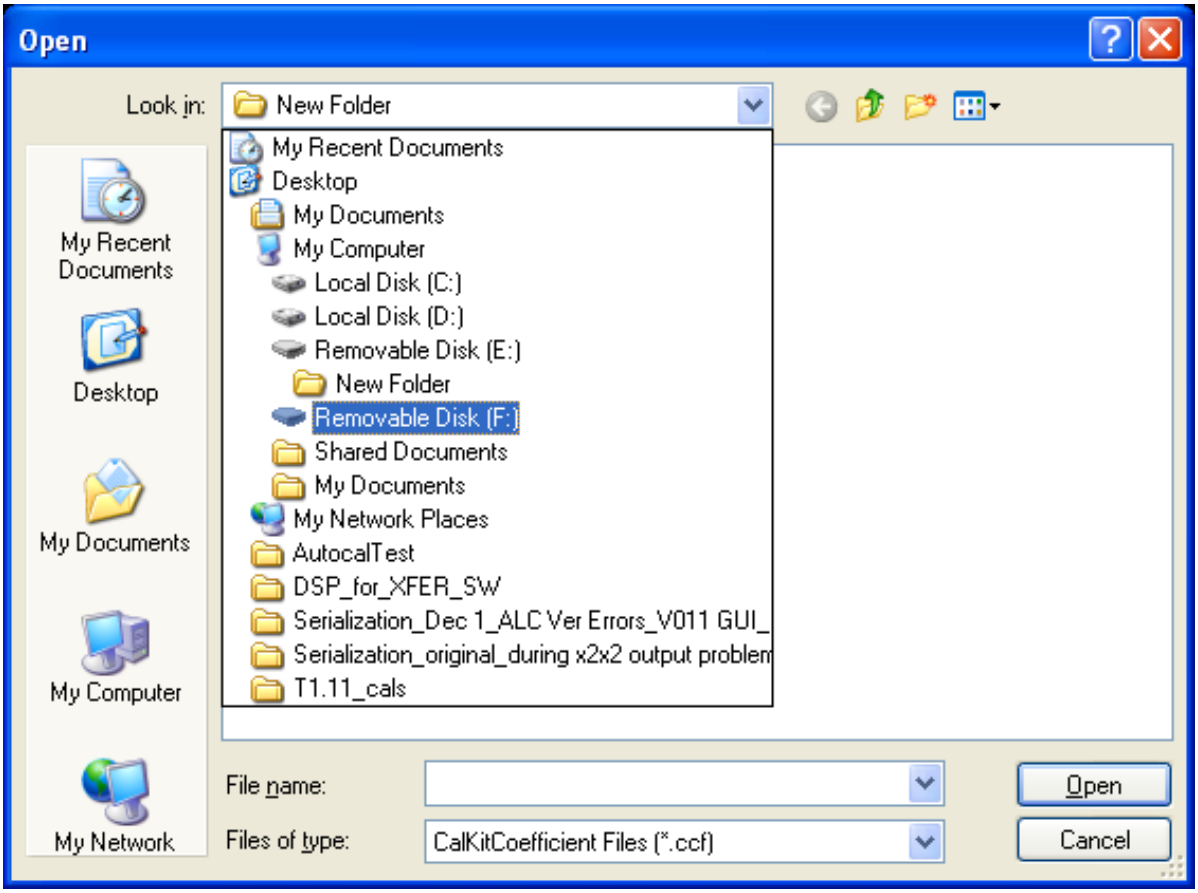

Figure 5-34. Open Dialog Box

9. Click on the Files of Type: down arrow, select Lightning Files and click Open

10. The calibration kit component coefficient files are listed. Highlight the first file (e.g. **`Kit_info.kfo`**), click Open as shown in Figure 5-35.

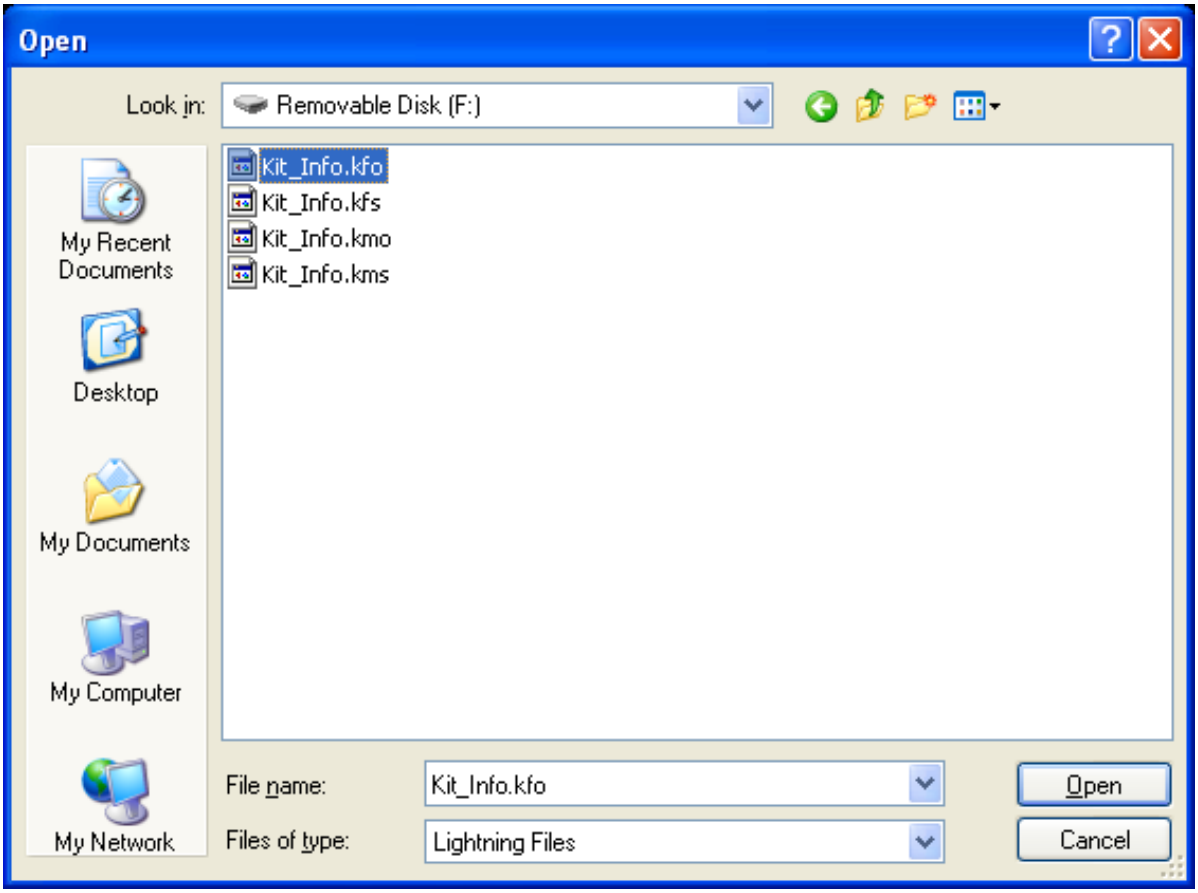

Figure 5-35. Highlight the calibration kit component coefficient file

11. Back to the Install dialog box, click OK to load the coefficients (Figure 5-36).

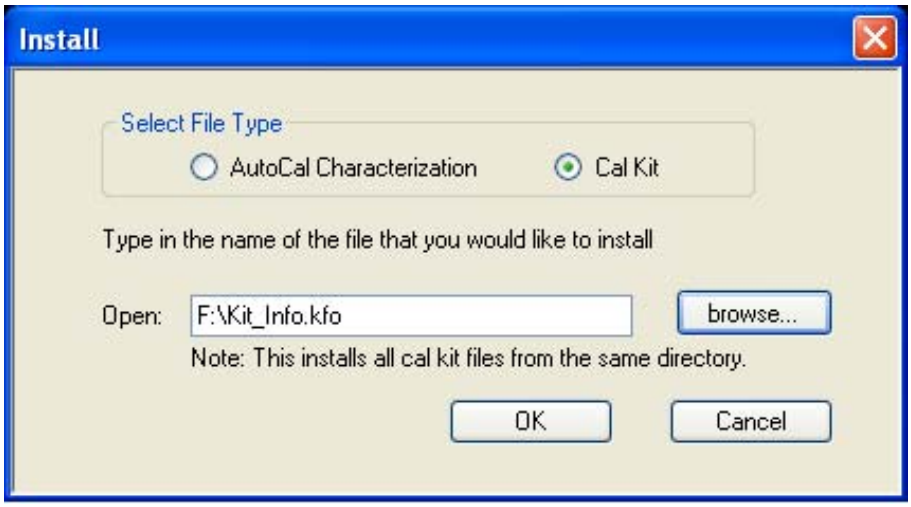

Figure 5-36. Install Dialog Box

12. A message box will appear to state all four files has been loaded (Figure 5-37). Click OK button to close the box.

Figure 5-37. Message Box

13. Touch the Back icon to return to the CALIBRATION [TR] Menu.
14. Select the Calibrate button and then the Manual Cal button.
15. Select Full 1 Port button.
16. Connect the female Open calibration standard to VNA Port 1 and then select the Open button to measure. When done, a check mark appears on the Open button to indicate the existence of a calibration.
17. Remove the Open, connect the female Short calibration standard to VNA Port 1 and then select the Short button to measure.
18. Remove the Short, connect the female Load calibration standard to VNA Port 1 and then select the Load button to measure.
19. Remove the Load calibration standard.
20. Select the Done button.
21. Connect a short to one end of the through cable (DUT).
22. If the through cable is a male to female, connect a female to female adapter to the other end of the cable and then connect the open end of the adapter to VNA Port 1. If not, connect the open end of the through cable to VNA Port 1.
23. Press the **Measurement** key and then select the Reference Plane button.
24. Select the Auto button. Subtract 5 mm for K connector (5.1 mm for V connector) from the displayed Distance value. This is the Length of the through cable used for Factory RF Calibration.

Chapter 6 — Theory of Operation

6-1 Introduction

This chapter provides a brief overview of the functional assemblies and major parts that comprise the MS4640A VNA system. It also briefly describes the operation of each major assembly.

6-2 System Overview

MS4640A Series Vector Network Analyzers are ratio measurement systems used to measure complex vector signal characteristics of devices and systems in the 70 kHz to 70 GHz frequency range.

The MS4640A performs complex vector signal measurements by sourcing a stimulus signal to the Device Under Test (DUT) that is connected to the front panel Port 1 and/or Port 2 connectors. It simultaneously measures the DUT response, which consists of reflected and/or transmitted (attenuated or amplified) signals at the connectors of the DUT. The reflected and/or transmitted signals and a sample of the stimulus signal are down converted to intermediate frequency (IF) signals.

These IF signals are then converted into digital information and processed by a Digital Signal Processor (DSP) to determine the real and imaginary vector components of the signal being measured. The information is then normalized for the desired S-parameter and presented to the user via the front panel color LCD display.

A keypad and a rotary knob on the front panel as well as a touch screen on the LCD display provide user interaction with the MS4640A Single Board Computer. External PC mouse and PC keyboard are also supported via either the PS/2 and USB connectors on the rear panel or the USB connectors on the front panel.

The MS4640A is equipped with a hard disk for storage and retrieval of data and front panel setup information. The USB connectors on the front and rear panels also allow using a USB memory device (a “USB flash drive”) for data and front panel setup information storage.

The MS4640A implements an IEEE488.2 interface. This interface allows an external connected GPIB controller to control the MS4640A in the “Remote Only” mode.

6-3 System Description

The MS4640A Vector Network Analyzer essentially incorporates two Vector Network Analyzers in one instrument. It consists of a Low Band section and a High Band section. The frequency break point of these two sections is 2.5 GHz. Refer to Figure 6-1, “VectorStar MS4640A Series VNA Simplified Block Diagram” below.

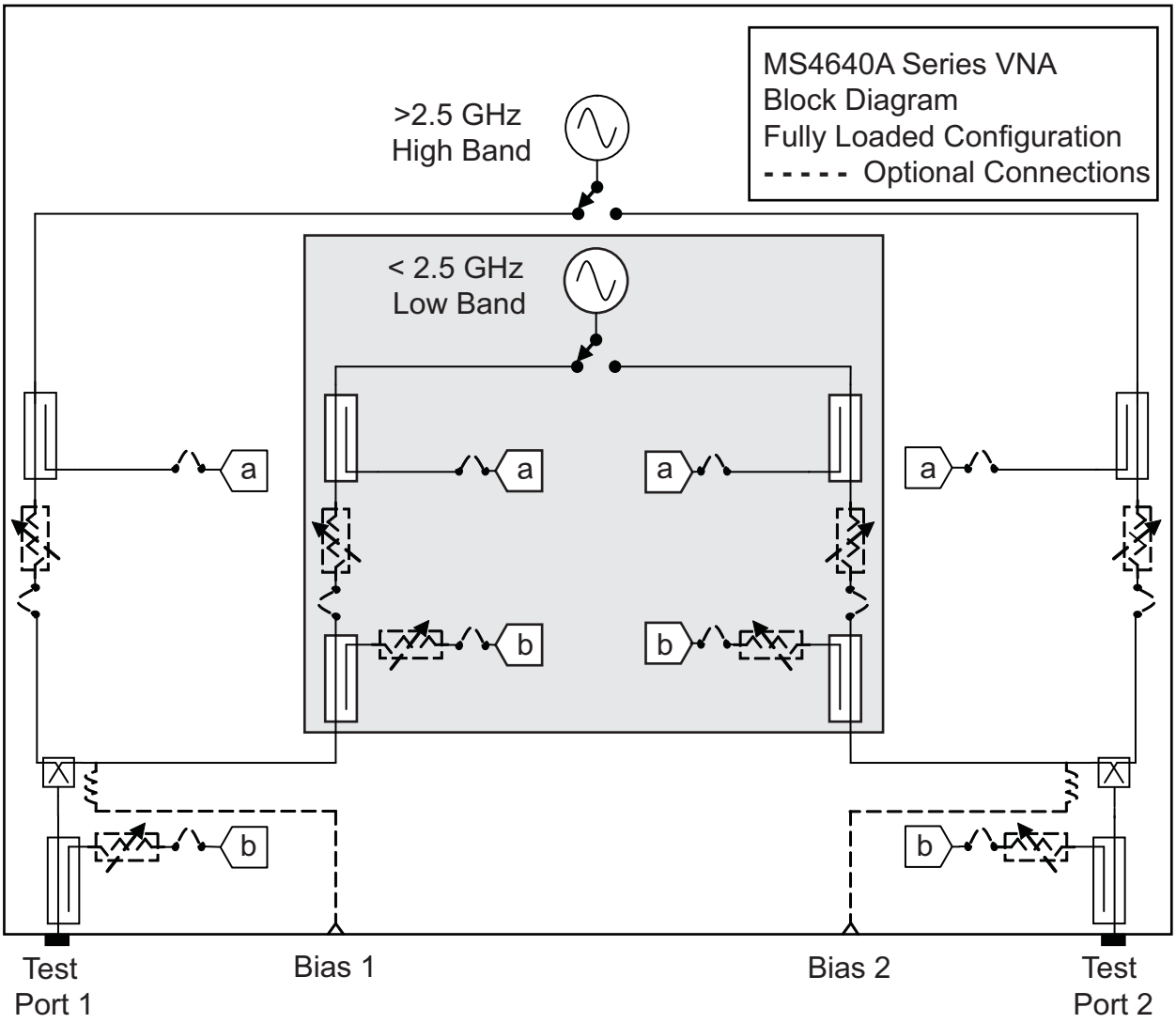

Figure 6-1. VectorStar MS4640A Series VNA Simplified Block Diagram

6-4 Functional Description of Major Assemblies

The MS4640A internal assemblies and components can be divided into four major groups depending on their mounting location inside the instrument as shown below in Figure 6-2, “Phase 1 MS4640A Series VNA Typical Internal Assemblies and Components”:

- Analog Section
- RF Deck
- Digital Section
- Main Chassis Assemblies

Brief functional descriptions of the major sub-assemblies and components by these major groups are listed in the sections following Figure 6-2.

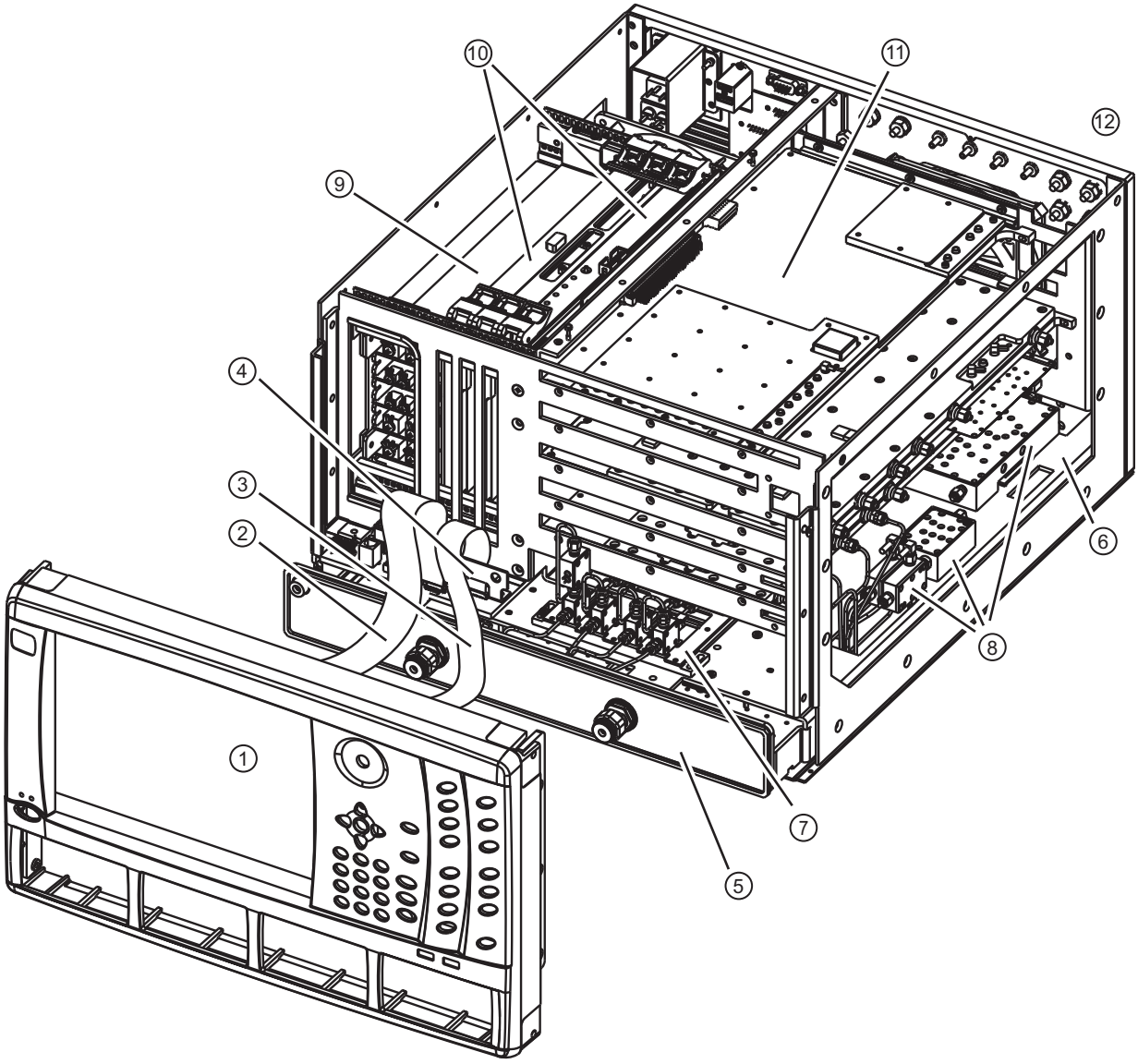

Figure 6-2. Phase 1 MS4640A Series VNA Typical Internal Assemblies and Components (1 of 2)

Front Panel

1. Typical Front Panel (Phase 1 shown)
2. Front Panel Ribbon Cable – Permanently attached to Front Panel
   - Phase 2 Front Panels have three removable cables: Power/Signal Ribbon, USB, and HDMI.
3. Front Panel Flex PCB Cable – Permanently attached to Front Panel
4. Front Panel Flex PCB Cable ZIF Connector

RF Deck

5. RF Deck Front Panel – No options installed
6. RF Deck inside chassis

Sampler/LO Distribution Module Assembly

7. Sampler/LO Distribution Module Assembly – The exact configuration depends on the instrument serial number and equipped options. Typical components consist of:
   - A111 LO Distribution Module (bottom)
   - A100 Sampler Module (left on top of A111)
   - A101 Sampler Module (left center on top of A111)
   - A102 Sampler Module (right center on top of A111)
   - A103 Sampler Module (right on top of A111)
   - A130 LO Coupler Module (on top of A100 or A101) – Not present in Phase 2 VNAs where the A111 LO Distribution Module – ND73193 – 72440 is used.

RF Deck Top Side Modules

8. RF Deck Top Right Side Modules – Consisting of:
   - A113 5-20 GHz Doubler Module (rear)
   - A115 Low Band Transfer Switch Module (center)
   - A116 Low Band Bridge Module (front inner)
   - A117 Low Band Bridge Module (front outer)

Top Side Assemblies

9. Power Supply Module
10. Digital PCB Assemblies
11. Analog Module Assemblies

Rear Panel

12. Rear Panel

Figure 6-2. Phase 1 MS4640A Series VNA Typical Internal Assemblies and Components (2 of 2)

6-5 Analog Section

The Analog section is located on the right side of the instrument. It consists of the following module assemblies:

- RF Source Module
- Low Band Receiver Module
- IF Band Module

RF Source Module

The RF Source Module generates the primary source and the local oscillator (LO) outputs. The module contains the phase lock circuitry for the oscillators, circuitry to generate different output frequency bands spanning 70 kHz to 5000 MHz, and output amplifiers. Both the source output level and the local oscillator output level are controllable via Auto Level Control (ALC) loops.

The Source and LO RF outputs are both generated by voltage controlled oscillators (Main VCOs) that nominally span 2.5 to 5.0 GHz. The outputs of the Main VCOs are either passed out of the module directly for High Band Mode or are used to mix down to frequencies of 70 kHz to 2.5 GHz for the Source output and ~12 MHz to 2.5 GHz for the LO output for the Low Band Mode.

There are two heterodyne oscillators (HET VCOs), one for the Source and one for the LO. In the Low Band Mode, these two HET VCOs are mixed against the outputs of the Source Main VCO and LO Main VCO to generate frequencies less than 2.5 GHz. Nominally, the HET VCO is set to 5 GHz for output frequencies less than 1.5 GHz and 6 GHz for output frequencies higher than 1.5 GHz. However, the output of the HET VCO can vary by approximately 100 MHz from the nominal values due to spur avoidance. If not operating in the Low Band Mode, the HET VCO is set to 5.5 GHz.

Additionally, the outputs of the Main VCOs are sampled and fed back, in order to allow phase-locking to the system 10 MHz reference. The phase locking circuitry for the Source and LO VCOs are essentially identical in their implementation.

When phase locking the Main VCO, the VCO is mixed with an offset oscillator (Offset VCO) to produce a lower frequency signal. This mixed down signal is fed into a phase detector where it is compared against a signal produced by a Direct Digital Synthesis (DDS) IC.

To improve harmonics and spurious characteristics of the output signals, they are passed through low pass filter sections. A 5000 MHz Low Pass Filter is placed at the High Band LO signal output. Additionally, there is a switched filter section in the LO High Band path that is enabled for outputs less than 3175 MHz. Only fixed 2500 MHz Low Pass Filters exist in the Low Band Source and LO outputs.

The RF Source Module can operate in two modes:

- Common Offset Mode
- Independent Offset Mode

RF Source Module Common Offset Mode

When in this mode of operation, the LO Offset VCO is shared and locks up both the source and LO loops. The Source Offset VCO is disabled in this mode. The DDS outputs for the Source and LO make up the frequency difference between the two outputs. Sharing a common offset VCO allows the two signal sources to more closely track each other. The resulting Intermediate Frequency (IF) has better phase noise because much of the offset VCO noise is ratioed out.

To make accurate measurements, the IF must be settled before the DSP processing is triggered. When operating in common offset mode, the IF settles faster. Even though the common offset VCO (and therefore both main VCOs) may still be slewing in phase, the IF itself may already be settled because the Source and LO are tracking each other. The two main VCOs are able to track the offset VCO settling because of their high bandwidths. Therefore in general, measurements can be made sooner in the common offset mode, and overall system speed is thus faster.

When in Low Band Mode, the LO HET VCO is also shared by both the Source and LO and the Source HET VCO is disabled.

However, the common offset mode can only be used when the Source and LO frequencies are relatively close. The range of the DDS limits the allowable frequency difference. Furthermore, the Source and LO must be operating in the same frequency band. Common offset mode is most beneficial for typical S-parameter measurements where speed is an important parameter.

RF Source Module Independent Offset Mode

When operating in this mode, the Source and LO output signals are generated independently. Each main loop is fed by a separate offset VCO and also Low Band signal generation is performed by two independent HET VCOs. This mode is for measurements that require the Source and LO be far apart in frequency.

Operation in Independent Offset Mode enables the Source and LO to be arbitrarily apart in frequency. One output could be sending out a High Band signal, while the other output is creating a Low Band signal.

Source and LO Signal Output Ports

There are two sets of output ports for both the Source and LO signals. These ports route separately to either the High Band branch of the instrument or the Low Band branch of the instrument. Only one frequency band is active at a given time for either the Source or LO. However, the Source and LO do not necessarily have to be in the same band – one could output a High Band frequency, while the other generates a Low Band frequency.

The High Band Outputs for the Source and LO, respectively, are J14 and J4. The Low Band LO output is at J6 and the Low Band Source output is at J8. The Main VCO output is switched into one or the other of these two paths.

Feedback from a level detector adjusts the level of the RF output for the Source. There are three separate level detectors – two for the High Band path located on the RF Deck and one for the Low Band path located within the RF Source Module. The two high band level detectors provide separate feedback for forward and reverse signal paths. The inputs from these level detectors are switched into the ALC loop, depending on the frequency band of operation.

This module also supplies the External Analog Output that is routed to the rear panel. Based on the user definition this output is generated by a DAC that can vary from –10V to +10V.

Low Band Receiver Module

The Low Band Receiver Module provides frequency conversion from low band (70 kHz to 2.5 GHz) to IF (5-20 MHz) for ALL measurement channels. It also provides IF signal amplification.

IF Band Module

The primary function of the IF Band Module is to take the system intermediate frequency (IF) signals from both the Low Band branch and High Band branch, perform some analog conditioning on them and then digitize them with the data to be sent on to the Digital Signal Processor (DSP) Module.

In summary, the IF Band Module performs the following tasks:

- IF multiplexing
- Gain ranging
- IF anti-alias filtering
- Analog to Digital conversion
- Formatting data for transmission to the DSP Module

In addition, the IF Band Module handles some infrastructure tasks such as 10 MHz generation, switching and distribution, analog monitor multiplexing (External Analog In included), and clock generation for the A/D converters, and IF calibrations. A simple state machine is also included for handling status line events and measurement triggering.

6-6 RF Deck

The RF Deck is located on the bottom side of the instrument. It consists of the RF Component Control PCB Assembly and RF/Microwave components for the MS4640A Vector Network Analyzer. These components perform the following:

- Stimulus signal routing from the signal source to the DUT through one of the test ports (Port 1 or Port 2)
- Signal separation of the incident, reflected and transmitted signals
- Down conversion of the incident, reflected and transmitted signals for High Band
- Stimulus signal and test signal attenuation
- Source/LO signal frequency multiplication

RF Component Control PCB Assembly

The RF Component Control PCB Assembly provides bias and control signals for operating the following components:

- Low Band Transfer Switch
- High Band Transfer Switch
- LO Module
- 5-20 GHz Doubler Module
- Switched Doubler Module
- Switched Quadrupler Module
- Low Band Source Attenuator(s)
- Low Band Test Attenuator(s)
- High Band Source Attenuator(s)
- High Band Test Attenuator(s)

This PCB assembly also provides Bias Tee voltage switching control and amplification for the outputs of the High Band ALC Level Detectors.

Diplexer/Bias Tee Assembly

The Diplexer multiplexes the Low Band stimulus signal and High Band stimulus signal to the VNA Test Port. It also separates and routes the test signal from the VNA Test Port to the Low Band branch. The integrated Bias Tee in this assembly allows a DC supply to be used as a source for supplying bias to the DUT via the test port center conductor along with the stimulus signal.

Low Band Transfer Switch

The Low Band Transfer Switch is controlled by the DSP Module to set the direction of the stimulus signal flow for the desired test (Port 1 = S_{11}, S_{21}; Port 2 = S_{22}, S_{12}) for frequencies below 2.5 GHz.

High Band Transfer Switch

The High Band Transfer Switch is controlled by the DSP Module to set the direction of the stimulus signal flow for frequencies above 2.5 GHz. The 70 GHz version of Transfer Switch also has an additional integrated switch which multiplexes the stimulus signal from the Switched Doubler Module and Switched Quadrupler Module to the second switch.

LO Module

Depending on the frequency of operation, the LO Module distributes the 2.5 to 5 GHz LO signals from the High Band LO Output of the RF Source Module to the Sampler Modules with frequency either unchanged or doubled to 5 to 10 GHz. There are two versions of the A111 LO Module Assembly which changes the required Sampler/LO Distribution Module Assembly components:

- The older A111 LO Module – ND70081 – 66270 requires the A130 LO Coupler Module – ND70083 – 68848 which is mounted on top of the A100 or A101 Sampler Module.
- The newer A111 LO Module – ND73193 – 72440 integrates the LO Coupler functionality into the A111 and the A130 is not used.
- The newer A111 LO Module can be used to replace older A111 Modules. Two additional cables are required and must be ordered: ND73203 – 67355-12 and No ND – 62111-8.

5-20 GHz Doubler Module

Depending on the frequency of operation, the stimulus signal from the High Band Source Output of the RF Source Module passes into one of the three internal paths in the 5-20 GHz Doubler Module. The 5-20 GHz Doubler Module has three internal paths:

- Through
- Doubler
- Doubler - Doubler

For operation between 2.5 to 5 GHz, the stimulus signal is routed to the “Through” path. For operation between 5 to 10 GHz, the stimulus signal is routed to the “Doubler” path. For operation between 10 to 20 GHz, the stimulus signal is routed to a second internal Doubler after it has passed through the first Doubler.

Switched Doubler Module

Depending on the frequency of operation, the Switched Doubler Module either passes the 2.5 to 20 GHz stimulus signal from the 5 to 20 GHz Doubler Module directly to its output or doubles the frequencies to 20 to 40 GHz. For the MS4645A and MS4647A VNA, this module is used for operation between 20 and 38 GHz.

Switched Quadrupler Module

The Switched Quadrupler Module quadruples the stimulus signal for operation between 38 and 70 GHz.

Low Band Source Attenuators

The optional Low Band Source Attenuators can be used to attenuate the stimulus signal in 10 dB steps for frequencies below 2.5 GHz.

Low Band Test Attenuators

The optional Low Band Test Attenuators can be used to reduce the test signal in 10 dB steps for frequencies below 2.5 GHz.

High Band Source Attenuators

The optional High Band Source Attenuators can be used to attenuate the stimulus signal in 10 dB steps for frequencies above 2.5 GHz.

High Band Test Attenuators

The optional High Band Test Attenuators can be used to reduce the test signal in 10 dB steps for frequencies above 2.5 GHz

Low Band Receiver Bridges

The Low Band Receiver Bridge samples the Low Band stimulus signal and routes the sample to the Reference signal input (a1 or a2) of the Low Band Receiver Module.

Low Band Test Bridges

The Low Band Test Bridge separates the Low Band test signal (Reflected or Transmitted) from the stimulus signal and routes the test signal to the Test signal input (b1 or b2) of the Low Band Receiver Module.

High Band Reference Couplers

The High Band Reference Coupler samples the High Band stimulus signal and routes the sample to the Reference Sampler Module (a1 or a2).

Port Couplers – Port 1 and Port 2

The Port Coupler separates the High Band test signal (Reflected or Transmitted) from the stimulus signal and routes the test signal to the Test Sampler Module (b1 or b2). It also allows the Low Band test signal to pass through and is fed to the Diplexer to be routed to the Low Band branch.

Sampler Modules

The Sampler Module uses the LO signal from the LO Distribution Module to convert the Microwave band signal above 2.5 GHz to Intermediate Frequency (IF) signals in the range of 10 to 20 MHz.

LO Coupler

The LO Coupler has an integrated level detector which provides feedback to the RF Source Module for LO signal automatic leveling control (ALC).

- The older A111 LO Module – ND70081 – 66270 requires the A130 LO Coupler Module – ND70083 – 68848 which is mounted on top of the A100 or A101 Sampler Module.
- The newer A111 LO Module – ND73193 – 72440 integrates the LO Coupler functionality into the A111 and the A130 is not used.
- The newer A111 LO Module can be used to replace older A111 Modules. Two additional cables are required and must be ordered separately: ND73203 – 67355-12 and No ND – 62111-8.

Level Detectors

The Level Detector provides feedback to the RF Source Module for High Band stimulus signal automatic leveling control (ALC).

6-7 Digital Section

The Digital Section is located on the left side of the instrument. The assemblies present depend on the instrument serial number. Table 6-1 below shows a summary of the Phase 1 and Phase 2 Digital Section PCBs and related assemblies. See the description of each assembly in the sections following for the effective serial numbers.

Table 6-1. Digital Section PCBs and Assemblies

Assembly	Phase 1 VNAs	Phase 2 VNAs
A3 Single Board Computer PCB – ND70061 – 3-2000-1525	YES	NO
Single Board Computer PCB – ND73875 – 3-2000-1668	NO	YES
Small Outline Dual-Inline Memory PCB – No ND – 3-2000-1671 – 2 each	NO	YES
A10 Digital Signal Processor PCB – ND70066 – 61933-3	YES	YES
A4 USB Controller PCB – ND70062 – 65412-4	YES	YES
A7 Graphic Adapter PCB – ND70064 – 3-2000-1517	YES	NO
Graphics Processor Unit PCB – ND73876 – 3-2000-1661	NO	YES
A8 GPIB Module PCB – ND70065 – 65413-3	YES	YES
A6 cPCI-PMC Adapter Card PCB – ND70063 – 3-2000-1485	YES	NO
Carrier Board PCB – ND73874 – 3-72444-3	NO	YES
Hard Disk Assembly – ND70071 – External Assembly	YES	NO
Solid State Hard Disk Assembly – ND73934 – 62091	NO	YES

Single Board Computer

The Single Board Computer controls operation of the entire instrument via CompactPCI (cPCI) interface; handles user interaction from the touch screen, front panel keys, external mouse and external keyboard; and performs data processing and formatting for measurement presentation.

For VNAs with S/N 1132241 and below, it contains 2 GBytes of DRAM. On-board peripherals include SATA Controller, USB Controller, Ethernet controller, PS/2 interface, PMC interface and RS-232 interface.

For VNAs with S/N 1133242 and above and above, the Single Board Computer contains 4 GBytes of DDR3 DRAM. On-board peripherals include SATA Controller, USB Controller, Ethernet Controller, and PCI Express PCIe interface. This SBC is mounted on the Carrier Board PCB.

Digital Signal Processor Module

The Digital Signal Processor Module receives high-speed analog-to-digital data from the IF Band Module, performs signal processing, and makes the results available to the Single Board Computer for further processing and display.

This module plugs into standard CompactPCI (cPCI) connectors on Motherboard 2 PCB Assembly. The module also has other custom connectors that provide an interface to the control bus of the instrument.

This module also handles the I/O Connector signals and Dedicated GPIB Connector signals.

The Single Board Computer communicates with the Digital Signal Processor Module through the cPCI bus.

Graphic Adapter Card

For VNAs with S/N 1132241 and below, the Graphic Adapter Card is a high performance dual display controller with 32 Mbytes of internal DRAM. It supports the digital flat panel display with a Transition Minimized Differential Signaling TMDS (PanelLink™) interface via the PMC P4 connector. It also supports the external RGB interface with its DVI-I connector via a DVI-I to VGA cable. These two interfaces can be driven simultaneously.

The Card is mounted on the cPCI to PMC Adapter Card so it links to the Single Board Computer via the PMC (PCI Mezzanine Card) interface.

Graphics Processor Unit Module

For VNAs with S/N 1133242 and above, the Graphics Module is a high performance dual-display controller with 512 MBytes of internal DRAM. Its Transition Minimized Differential Signaling TMDS interface supports the digital flat panel display. Its DVI interface supports the external XVGA interface. Both the digital flat panel display and the external XVGA display can be driven simultaneously. It is mounted on the Carrier Board and interfaces with the Single Board Computer via PCI Express PCIe bus.

GPIB Module

For VNAs with S/N 1132241 and below, the GPIB Module is mounted on the cPCI to PMC Adapter Card.

For VNAs with S/N 1133242 and above, the GPIB Module is mounted on the Carrier Board.

The GPIB Module manages the IEEE-488 General Purpose Interface Bus (GPIB) linked to the System GPIB connector on the rear panel. It also translates the bi-directional data back and forth between the Single Board Computer and the System GPIB bus. In addition, it also supports the Dedicated GPIB Interface.

USB Controller Card

For VNAs with S/N 1132241 and below, the USB Controller Card is mounted directly to the PMC bus connector on the Single Board Computer.

For VNAs with S/N 1133242 and above, the USB Controller Card is mounted to the PMC bus connector on the Carrier Board.

The USB Controller Card adds a second USB controller to the Single Board Computer.

cPCI to PMC Adapter Card

For VNAs with S/N 1132241 and below, the cPCI to PMC Adapter Card converts a Compact PCI interface to two PMC interfaces. The A7 Graphics Adapter Card and the A8 GPIP Module Card mount on the Adapter Card.

Carrier Board

For VNAs with S/N 1133242 and above, the Carrier Board provides the interfaced for mounting the Single Board Computer, the Graphic Processor Unit, the GPIB Module, and the USB Controller Card. It bridges these devices together as a digital sub-system. Its Compact PCI cPCI interface links the Single Board Computer to the DSP Module as well as adding an RS-232C interface to the Single Board Computer.

Hard Disk Drive Assembly

For VNAs with S/N 1132241 and below, the Hard Disk Drive Assembly is a data storage device with an interface conformed to SATA (Serial AT Attachment) standards. It is connected directly to the Motherboard 2 PCB Assembly. The Operating System software and VectorStar Application software are stored on this assembly.

Solid State Drive Assembly

For VNAs with S/N 1133242 and above, and above, the Solid State Drive Assembly is a data storage device with an interface conformed to SATA (Serial AT Attachment) standards. It is connected directly to the Motherboard 2 PCB Assembly. The Operating System software and VectorStar Application software are stored on this assembly.

6-8 Main Chassis Assemblies

The major assemblies mounted to the basic frame of the VNA are:

- Motherboard 1 PCB Assembly
- Motherboard 2 PCB Assembly
- Power Supply
- Front Panel Assembly
- Rear Panel PCB Assembly

Motherboard 1 PCB Assembly

The Motherboard 1 PCB Assembly provides signal routing and DC power distribution paths for the Low Band Receiver Module, IF Band Module and RF Source Module. It also links these modules to the Motherboard 2 PCB Assembly via backplane connectors.

Motherboard 2 PCB Assembly

There are two Motherboard 2 PCB versions which vary in connectors for power and front panel. The Motherboard 2 PCB Assembly provides signal routing and DC power distribution paths for the:

- Single Board Computer
- Digital Signal Processor Module
- cPCI to PMC Adapter Card or the newer Carrier Board
- Front Panel Assembly
- RF Component Control PCB Assembly
- Motherboard 1 PCB Assembly

The Motherboard 2 PCB also contains the:

- SATA Solid State Disk Drive/ Hard Disk Drive interface
- Analog Section Fan power source
- Digital Section Fan power source
- Rear Panel PS/2 Mouse and Keyboard interfaces
- Rear Panel USB interface
- Rear Panel Ethernet interface

The Phase 1 Motherboard 2 PCB – ND70070 – 61923-3 is equipped on VNAs with S/N 1132241 and below.

The Phase 2 Motherboard 2 PCB – ND73878 – 3-72813-3 is equipped on VNAs with S/N 1133242 and above.

Power Supply

There are two Power Supply Module and attached cable harness versions which must be matched to the equipped Motherboard 2 PCB above. The total available power of the power supply is rated at 450 Watts. The power supply outputs are divided into three groups of Analog, Digital, and Common. The output voltages are routed throughout the instrument via the Motherboard 2 PCB Assembly.

- The Analog outputs include +12 V, +6 V, +3.8 V.
- The Digital outputs include +12 V, +5 V and +3.3 V.
- There is only one Common output which is –12 V.

Front Panel Assembly

The Front Panel Assembly performs the following functions:

- Display measurement data and status information

- Provide an interface for user input of measurement setup and control information, via a touch screen, keys and a rotary knob
- Acts as a structural member of the instrument enclosure
- Provides RF shielding for the front of the instrument

The front panel consists of the front panel, the front panel rotary knob, the front panel control/interface PCB, the USB A Interface connectors, and a 26 cm (10.4 in) diagonal TFT type XGA Color Liquid Crystal Display with touch screen.

The graphic data from the instrument are sent from the Graphic Adapter card via a dedicated TMDS (PanelLink™) interface to the front panel assembly.

Touch screen and key interaction data are communicated to the instrument Single Board Computer via the USB Interface.

The power switch signals the power control logic of the instrument through both the USB interface and the RS-232 interface.

Angular rotational displacement information of the rotary knob is converted into a digital signal which is sent to the Single Board Computer via the RS-232 interface. This rotary knob can also be pushed in, activating a key press that will be sent as key data over the USB interface.

Controls for back-illumination of all keys are sent via the RS-232 interface.

Depending on the Front Panel version, the control, signal, and power connections are through two (2) ribbon cables (Control and Power/Signal) or three (3) cables (HDMI, USB, and Power/Signal).

Rear Panel PCB Assembly

The A17 Rear Panel PCB Assembly contains the:

- RS-232 interface
- System GPIB interface
- Dedicated GPIB interface
- Auxiliary (AUX) I/O interface
- Trigger Out interface
- External Trigger interface

6-9 Overall Operation

Low Band Operation

The 70 kHz to 2.5 GHz stimulus signal from the Low Band Source Out connector of the RF Source Module is switched via the Low Band Transfer Switch between the front panel Port 1 and Port 2 connectors. The Low Band Transfer Switch is controlled by the DSP Module via the RF Component Controller PCB Assembly to set the direction of the signal flow for the desired test. The stimulus signal is then passed through the Low Band Receiver Bridge, Low Band Test Bridge, Diplexer/Bias Tee Assembly and Port Coupler. The stimulus signal is output to the DUT via the Port Couplers mounted directly to the Port 1 and Port 2 front panel connectors.

A sample of the stimulus signal is picked off the Low Band Receiver Bridge and routed to the Reference signal input of the Low Band Receiver Module.

The reflected and transmitted device-under-test (DUT) signals are received simultaneously via the Port 1 and Port 2 Couplers. These signals are then passed via the Diplexer/Bias Tee Assembly to the Low Band Test Bridge.

Due to the directional characteristic of the Low Band Test Bridge, the test signal is separated from the stimulus signal and then routed to the Test Signal Inputs of the Low Band Receiver Module.

In the Low Band Receiver Module, the sampled stimulus signals (Reference) and test signals (Reflected or Transmitted) are then mixed with the 12 MHz to 2.5 GHz LO signal from the Low Band LO Out connector of the RF Source Module to generate IF signals in the range of 5 to 20 MHz.

The IF signals are then multiplexed to the A/D converters in the IF Band Module. The A/D converters digitize the IF signals and send the data to the DSP Module via the high-speed LVDS bus.

The DSP Module performs signal processing, and makes the results available to the Single Board Computer for further processing and display.

High Band Operation

The 2.5 GHz to 5 GHz stimulus signal from the High Band Source Out connector of the RF Source Module is fed to the 5-20 GHz Doubler Module.

- For operation between 2.5 to 5 GHz, the stimulus signal passes through the 5-20 GHz Doubler Module unchanged.
- For operation between 5 and 10 GHz, the frequency of the stimulus signal is doubled by the 5-20 GHz Doubler Module.
- For operation between 10 and 20 GHz, the frequency of the stimulus signal is doubled twice by the 5-20 GHz Doubler Module.
- For Model MS4644A, the output of the 5-20 GHz Doubler Module is fed to the Switched Doubler Module (SDM) which either passes the stimulus signal through unchanged or doubles the frequency of the stimulus signal for operation between 20 and 40 GHz. The stimulus signal is then fed to the High Band Transfer Switch.
- For Models MS4645A and MS4647A, the output of the 5-20 GHz Doubler Module is fed to the Switched Quadrupler Module (SQM). For operation below 38 GHz, an integrated switch in the SQM routes the stimulus signal to the SDM. For operation above 38 GHz, the frequency of the stimulus signal is quadrupled by the SQM. The stimulus signal from either the SDM or SQM is then fed to the High Band Transfer Switch.

The stimulus signal is then switched via the High Band Transfer Switch between the front panel Port 1 and Port 2 connectors. The High Band Transfer Switch is controlled by the DSP Module via the RF Component Controller PCB Assembly to set the direction of the signal flow for the desired test. The stimulus signal is then passed through the High Band Reference Coupler, Diplexer/Bias Tee Assembly and Port Coupler. The stimulus signal is output to the DUT via the Port Couplers mounted directly to the Port 1 and Port 2 front panel connectors.

A sample of the stimulus signal is picked off the High Band Reference Coupler and fed to the Level Detector.

The Level Detector provides feedback to the RF Source Module for High Band stimulus signal automatic leveling control (ALC). The sampled stimulus signal is then fed to the Reference signal Sampler Module.

The reflected and transmitted device-under-test (DUT) signals are received simultaneously via the Port 1 and Port 2 Couplers.

Due to the directional characteristic of the Port Coupler, the test signal is separated from the stimulus signal and then routed to the Test signal Sampler Module.

The 2.5 to 5 GHz LO signal from the High Band LO Out connector of RF Source Module is fed to the LO Module. Depending on the frequency of operation, the LO Module distributes the LO signals to all the Sampler Modules with frequency either unchanged or doubled to 5 to 10 GHz.

One of the LO signals is fed to the LO Coupler prior to feeding to the b1 Sampler Module. The LO Coupler has an integrated level detector which provides feedback to the RF Source Module for LO signal automatic leveling control (ALC).

The Sampler Module incorporates the Non Linear Transmission Line (NLTL) LO driven harmonic sampler architecture.

The 2.5 to 70 GHz sampled stimulus signals and test signals are converted by the Sampler Modules to Intermediate Frequency (IF) signals in the range of 10 to 20 MHz.

The IF signals are then multiplexed to the A/D converters in the IF Band Module. The A/D converters digitize the IF signals and send the data to the DSP Module via the high-speed LVDS bus.

The DSP Module performs signal processing, and makes the results available to the Single Board Computer for further processing and display.

6-10 Functional Block Diagrams

The figures in this section show the functional block diagrams of the VectorStar VNA.

- Figure 6-3, “Functional Block Diagram – Overview of VectorStar MS4640A VNA” on page 6-17
  - This figure shows the entire VNA in a single drawing. The figures following provide a close up view of this diagram for a single stage or function.
- Figure 6-4, “Functional Block Diagram – MS4647A Option 062 – Part 1 of 5” on page 6-18
  - This figure shows the Phase 1 Motherboard 2 PCB block diagram.
- Figure 6-5, “Functional Block Diagram – Phase 2 Motherboard 2 PCB” on page 6-19
  - This figure shows the Phase 2 Motherboard 2 PCB block diagram.
- Figure 6-6, “Functional Block Diagram – MS4647A Option 062 – Part 2 of 5” on page 6-20
- Figure 6-7, “Functional Block Diagram – MS4647A Option 062 – Part 3 of 5” on page 6-21
- Figure 6-8, “Functional Block Diagram – MS4647A Option 062 – Part 4 of 5” on page 6-22
- Figure 6-9, “Functional Block Diagram – MS4647A Option 062 – Part 5 of 5” on page 6-23

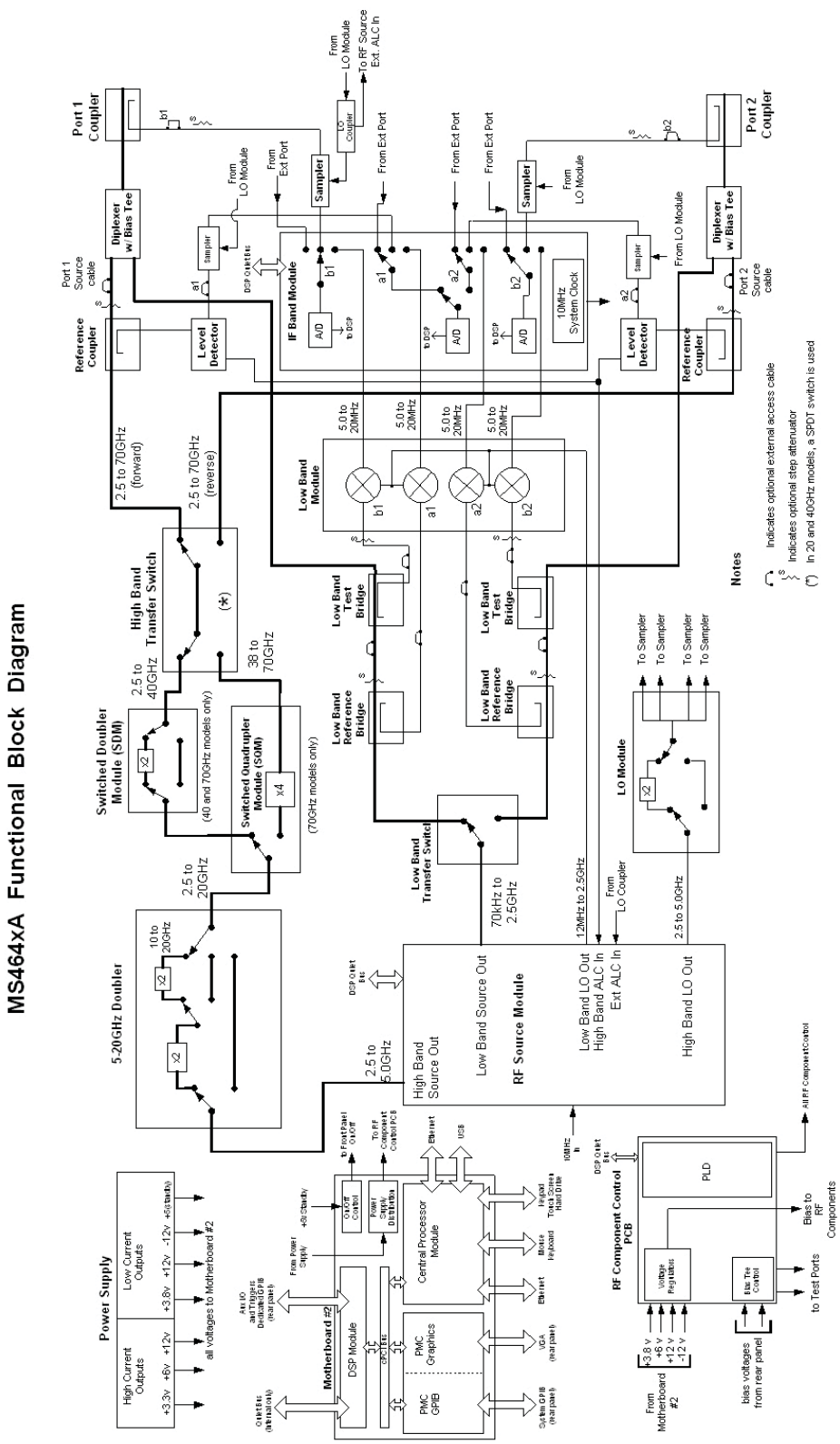

Figure 6-3. Functional Block Diagram – Overview of VectorStar MS4640A VNA

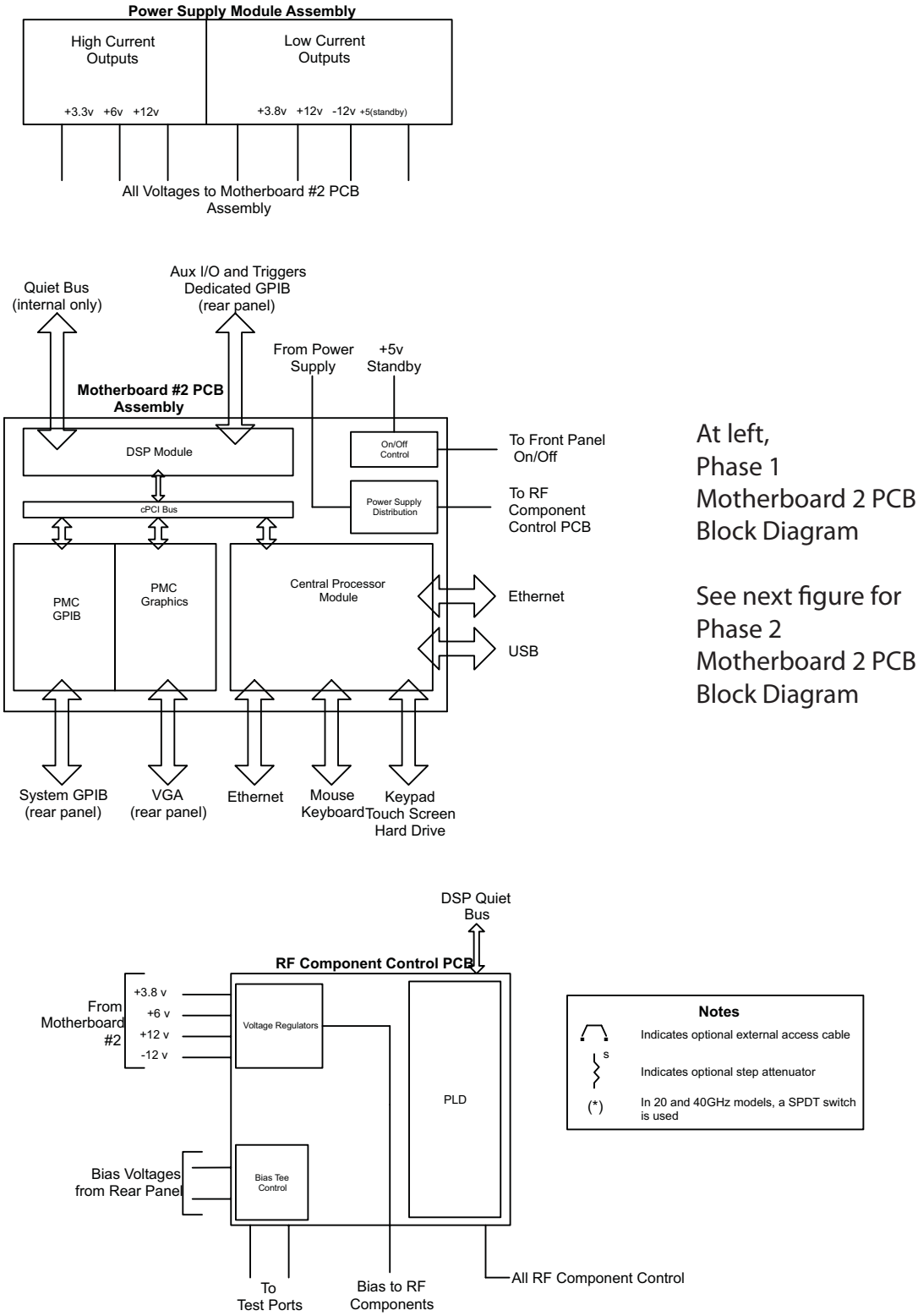

Phase 2 MB2 Block Diagram – Figure 6-5, “Functional Block Diagram – Phase 2 Motherboard 2 PCB” on page 6-19
Drawing to Right – Figure 6-6, “Functional Block Diagram – MS4647A Option 062 – Part 2 of 5” on page 6-20

Figure 6-4. Functional Block Diagram – MS4647A Option 062 – Part 1 of 5

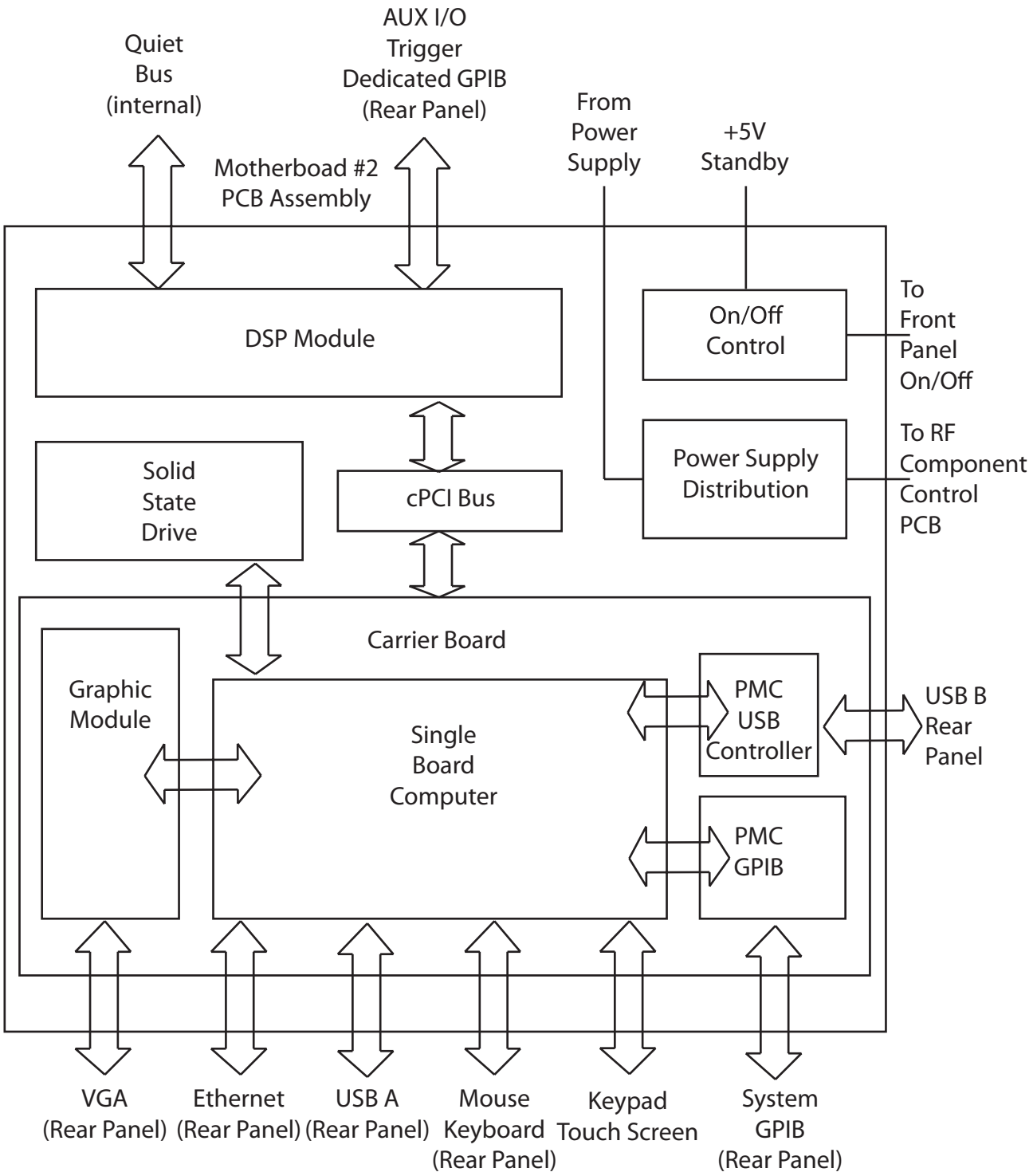

Phase 1 MB2 – Figure 6-4, “Functional Block Diagram – MS4647A Option 062 – Part 1 of 5” on page 6-18
Diagram to Right – Figure 6-6, “Functional Block Diagram – MS4647A Option 062 – Part 2 of 5” on page 6-20

Figure 6-5. Functional Block Diagram – Phase 2 Motherboard 2 PCB

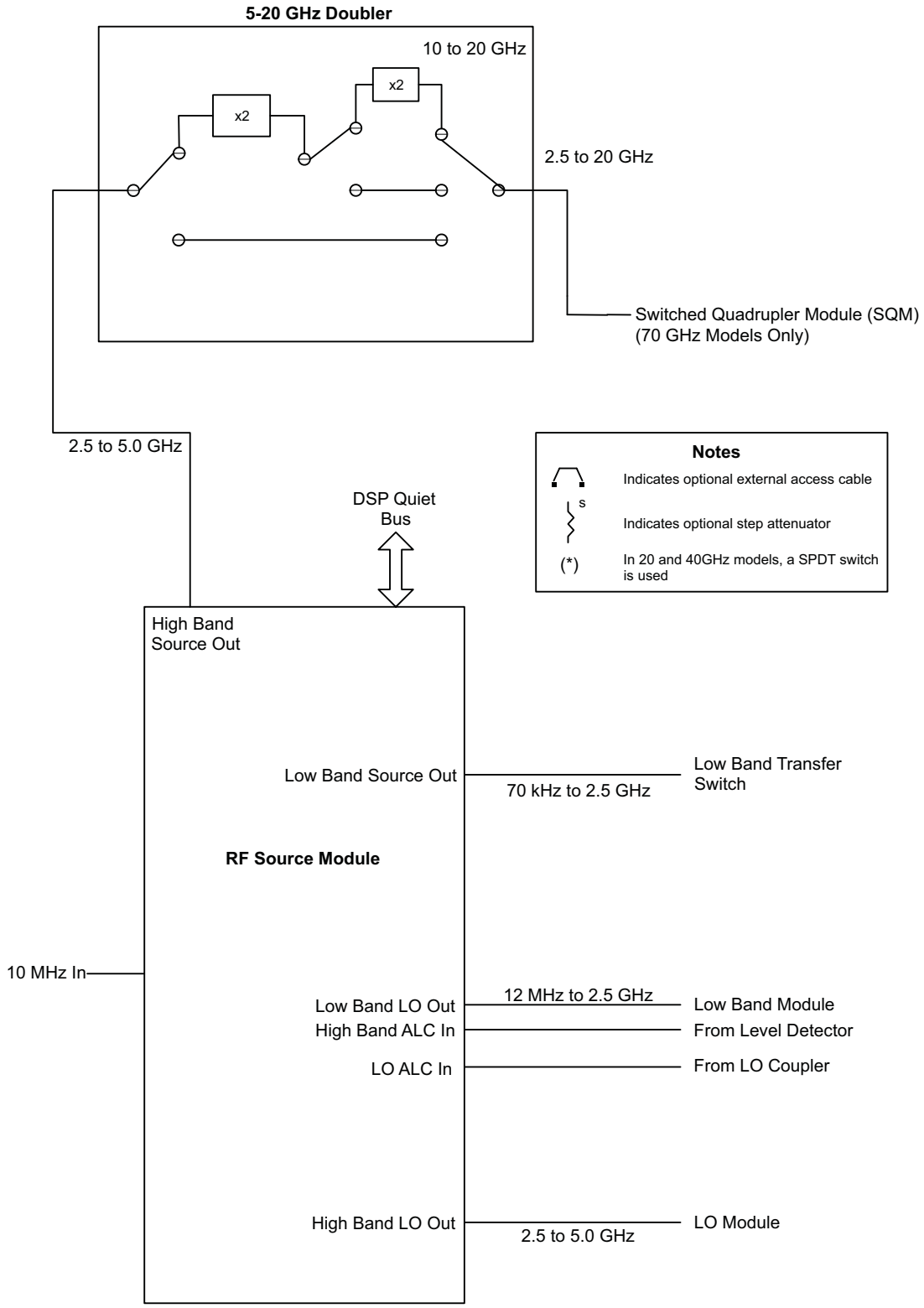

Diagram to Left – Figure 6-4, “Functional Block Diagram – MS4647A Option 062 – Part 1 of 5” on page 6-18
Diagram to Right – Figure 6-7, “Functional Block Diagram – MS4647A Option 062 – Part 3 of 5” on page 6-21

Figure 6-6. Functional Block Diagram – MS4647A Option 062 – Part 2 of 5

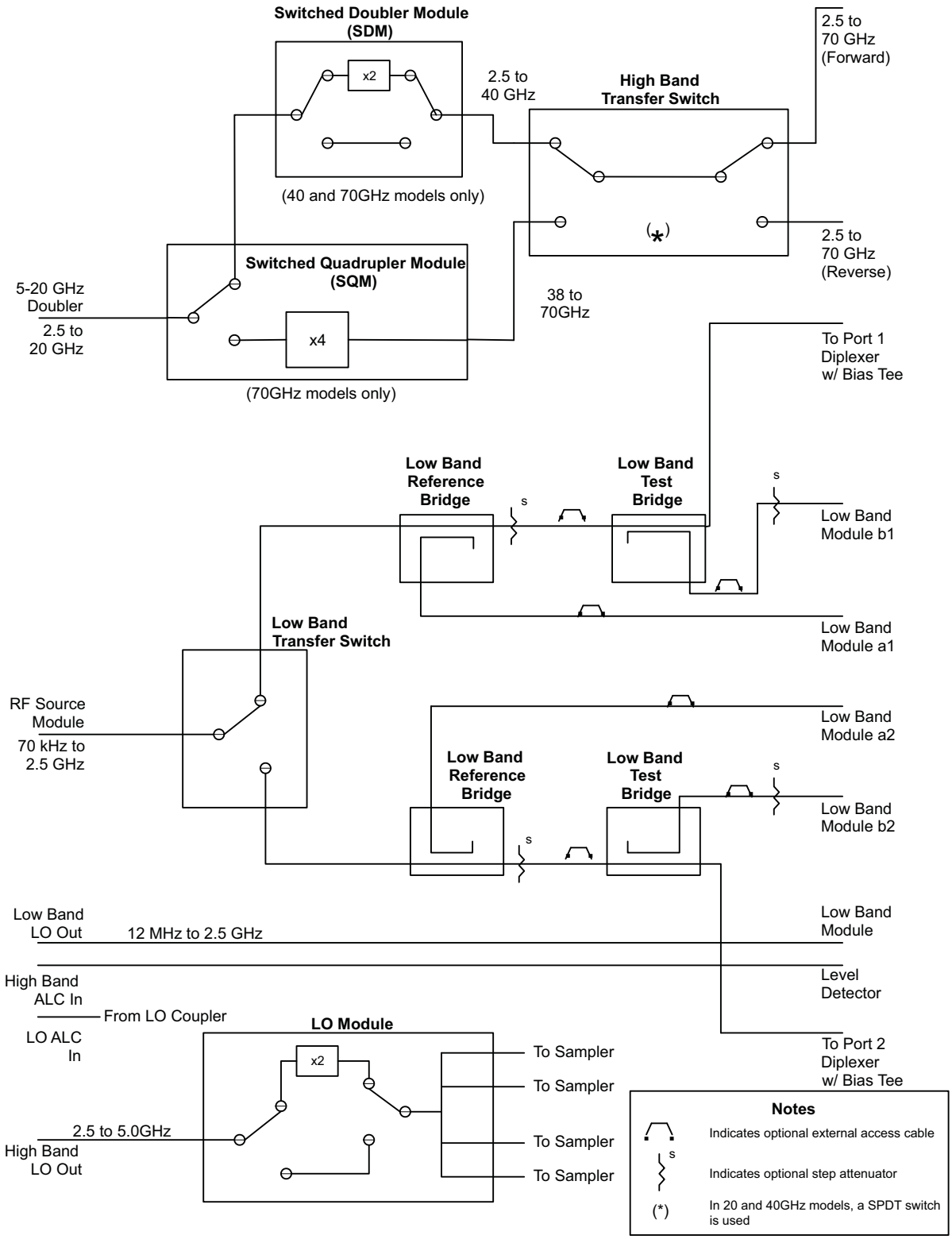

Diagram to Left – Figure 6-6, “Functional Block Diagram – MS4647A Option 062 – Part 2 of 5” on page 6-20
Diagram to Right – Figure 6-8, “Functional Block Diagram – MS4647A Option 062 – Part 4 of 5” on page 6-22

Figure 6-7. Functional Block Diagram – MS4647A Option 062 – Part 3 of 5

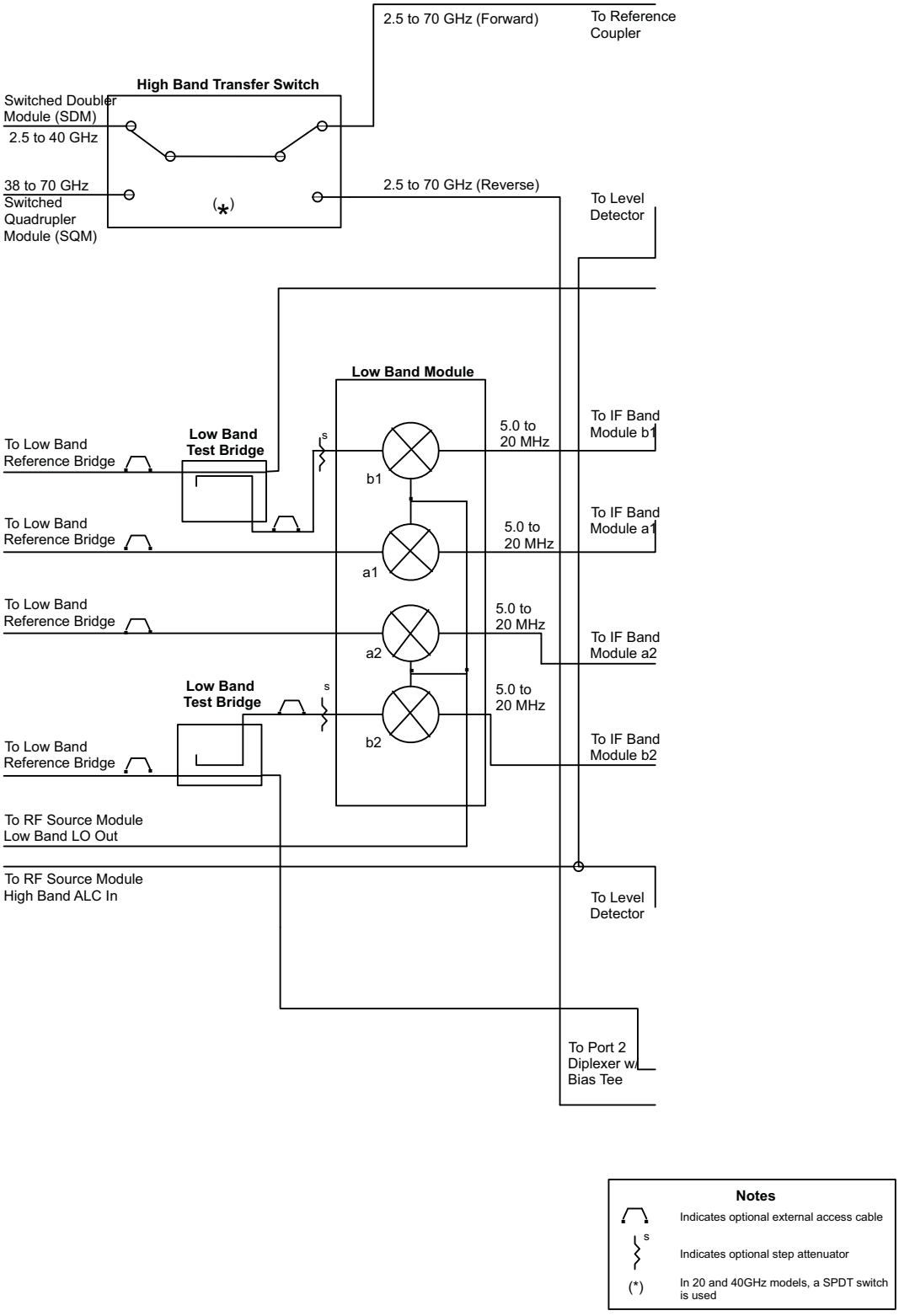

Diagram to Left – Figure 6-7, “Functional Block Diagram – MS4647A Option 062 – Part 3 of 5” on page 6-21
Diagram to Right – Figure 6-9, “Functional Block Diagram – MS4647A Option 062 – Part 5 of 5” on page 6-23

Figure 6-8. Functional Block Diagram – MS4647A Option 062 – Part 4 of 5

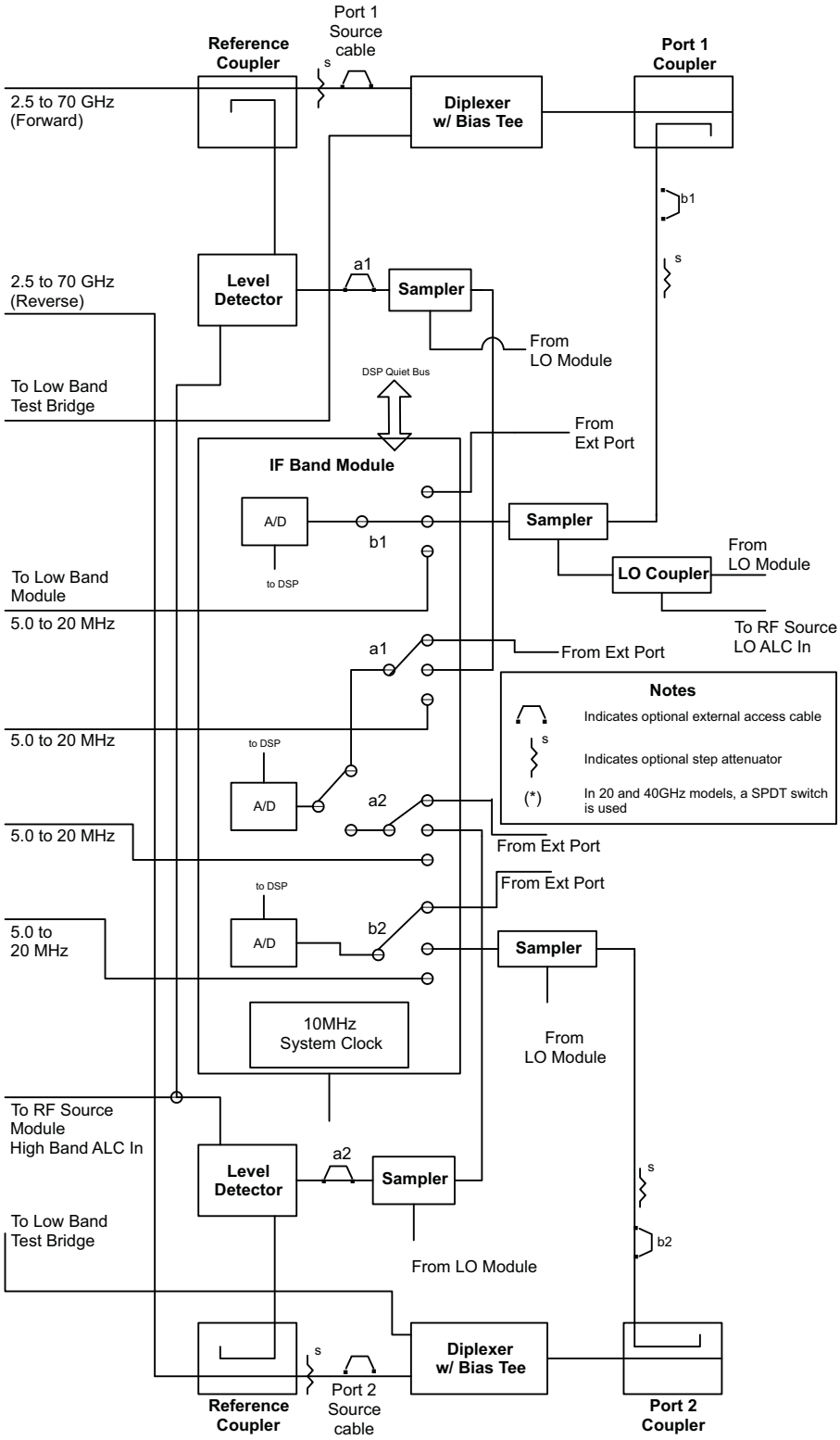

Diagram to Left – Figure 6-8, “Functional Block Diagram – MS4647A Option 062 – Part 4 of 5” on page 6-22

Figure 6-9. Functional Block Diagram – MS4647A Option 062 – Part 5 of 5

Chapter 7 — Replacement Part Groups and Common Procedures

7-1 Introduction

This chapter provides an overview of the replacement procedure definitions, replacement part groups, and common procedures.

7-2 Procedure Definitions

These definitions are used throughout the various replacement part chapters and procedures:

- **Remove** – Take a component or assembly out of the chassis, to either replace it or to provide access to a deeper dwelling or underlying part.
- **Replace** – Install the replacement part. Often, this involves transferring harnesses, cables, and/or mounting brackets from the old to the new part. Always use the same screws and other mounting hardware in the same location. The mounting hardware varies with location and changing a screw length or thread can damage or strip the threads of the underlying component.
- **Prepare** – Usually describes transferring hardware such as handles and/or cables between old and new parts. In many cases, protective covers or films must also be removed. For some of the RF Deck modules such as the Attenuators, preparation involves installing the mounting brackets where the left/right bracket orientation must be observed.
- **Install** – Install a part, either new or replacement, into the instrument. The starting point assumption for these procedures is that the part described is removed from the instrument, and if replaced, all transferrable parts have been installed on the new part.
- **Connect** – Mate two or more connectors. For power and signal cables, press the cable plug into the required socket. Most connectors of this type are keyed and can only go in one way. Cable and plug orientation and/or locking tabs are always noted. If the connection is a threaded RF connection (such as SMA connectors, K connectors, V connectors, or semi-rigid coaxial cable), make sure the connection is correctly aligned and threaded-on with a couple of turns. Do not tighten an RF connection until directed.
- **Torque** – Use the appropriate torque wrench to tighten the connector to a specified value. In all cases, the recommended Anritsu tool (or equivalent) is specified.
    - Throughout this manual, SI torque units are used. For more information on SI units, refer to ***NIST Guide for the Use of the International System of Units (SI), NIST Special Publication 811, 2008 Edition*** available at www.nist.gov.
    - lbf · in – Torque measured in pound-force inch or in popular parlance, inch-pounds.
    - lbf · ft – Torque measured in pound-foot or in popular parlance, foot-pounds.
    - N · m – Torque measured in Newton-meters.
    - In general, SMA, K, and V connectors are torqued to 8 lbf · in (8 inch pounds) using a 5/16” Torque End Wrench – Anritsu 01-201 or equivalent.
    - The front panel Test Port Adapters require a 1/2” torque end wrench set to 60 lbf · in (60 inch pounds).
    - The underlying Test Port Couplers are held onto the RF Deck Front Panel with a nut and thrust washer and require a 13/16” deep socket and a torque wrench set to 15 lbf · ft (15 foot pounds).
    - For a complete list of recommended tools, see Section 1-10 “Recommended Tools and Supplies” on page 1-10. See the RF Connections section above for other notable torque specifications.
- **RF Connections** – These are connections for the primary RF signal path, usually through a 3.5 mm, SMA, K, or V connector. Except for the test port adapters and test port couplers, all RF connectors are handled using a 5/16” torque end wrench set to 8 lbf · in. Where appropriate, the use of two (2) end wrenches is defined.

- **Signal/Power Connections** – These are miscellaneous signal and power connections either as a multi-wire harness, one or more twisted pairs, or a ribbon cable. Not all replacement parts come with the appropriate cable or harness. In all cases where a soldered-on harness is used (for example, the RF Deck Top Side Low Band Attenuators) the harness is installed on the replacement part and no soldering is required. In general, if the harness/cable is removable, it must be transferred from the old part to the new part.
- **Fasten** – Insert mounting screws and/or other mounting hardware and loosely tighten a couple of turns without tightening. Usually insert all screws before tightening.
- **Tighten** – Typically using a screwdriver, nut drive, or common end wrench, tighten the hardware firmly without resorting to force. If "tighten" is used, there are no torque specifications for the fastener. Tighten the screws in at least two passes, usually in a specified sequence, often from the center of an assembly to its outer edges. This is especially important when working with large panels such as the Rear Panel Assembly or the Rear Panel Sub-Plate.

7-3 Replacement Part Groups

The replacement part groups are determined by the general procedure to access, remove, and install the part. Each group is described below and followed by a cross reference to the chapter containing the detailed replacement procedure. In general, each part group has a separate chapter.

- Common procedures
- External components
- Front Panel removal, preparation, and installation
- Digital PCB and Analog Module assembly removal, replacement, and installation
- RF Deck identification, orientation, and specific module procedure guidelines
- RF Deck Bottom Side A18 Modules and PCB removal and installation
- RF Deck Bottom Side Port Group module removal and installation
- RF Deck removal and installation
- RF Deck Top Side module removal and installation
- Rear Panel removal, component replacement, and Rear Panel installation
- Power Supply Module removal and installation
- Digital PCB Fan Assembly removal and installation
- Motherboard 2 and Motherboard 1 PCB Assembly removal and installation

Common Procedures

Common procedures are covered in the second half of this chapter (Chapter 7) and describe setting up the work area, removing and installing the outer cover, and removing and installing the inner cover. Once described here, other procedure merely provide a cross-reference link back to this chapter.

- Section 7-4 "Common - Prepare Work Area and Safety" on page 7-9
- Section 7-5 "Common - Remove Outer Cover" on page 7-10
- Section 7-6 "Common - Remove Inner Cover" on page 7-13
- Section 7-7 "Common - Install Inner Cover" on page 7-15
- Section 7-8 "Common - Install Outer Cover" on page 7-16

External Components

The chapter on external components (Chapter 8, "External Component Procedures") describes how to replace Front and Rear Panel external components. These procedures can be accomplished while the covers remain in place. The Front Panel Model Identity Labels are covered in Front Panel replacement procedures in Chapter 10.

- Section 8-2 "Replace Front Panel Test Ports" on page 8-2
- Section 8-3 "Replace Front Panel Loops" on page 8-4
- Section 8-4 "Replace Rear Panel Loops" on page 8-5
- Section 8-5 "Replace the Solid State Drive/Hard Disk Drive Assembly" on page 8-6

Front Panel

The Front Panel chapter (Chapter 10, "Front Panel Assembly") describes how to remove the Front Panel, and then if required, how to transfer the Front Panel Handles, and finally how to install the Front Panel cables and the Front Panel hardware as well as how to install the Front Panel Model Identity Labels. In some cases, the Front Panel must be removed without replacing it to provide access to other deeper dwelling components such as the RF Deck Top Side modules.

- Section 10-3 "Remove the Phase 1 Front Panel Assembly" on page 10-3
- Section 10-4 "Remove the Phase 2 Front Panel Assembly" on page 10-11
- Section 10-6 "Install the Phase 1 Front Panel Assembly" on page 10-19
- Section 10-7 "Install the Phase 2 Front Panel Assembly" on page 10-21
    - This section also describes how to install a Model Identity Label to a replacement Front Panel. Note that the Model Identity Label must be ordered separately from the Front Panel.

Digital PCB and Analog Module Assemblies

The removal and installation of the top side digital PCB assemblies and the right side analog module assemblies is covered in Chapter 9, "Remove and Install Digital/Analog PCBs". The six (6) top side digital PCBs are removable as three assemblies. The three (3) right side analog PCB-like modules are all single assemblies. The procedures describes how to disconnect the PCB/module cables, remove the PCB/module, remove and/or replace any daughter PCBs, and then reassemble, and install. These procedures are also used as references for other components where one or both sets of PCBs/modules must be removed to access deeper dwelling components and assemblies.

- Digital PCB Assemblies
    - Section 9-3 "Remove Digital PCB Assemblies" on page 9-7
    - Section 9-5 "Replace the A3 SBC and A4 USB PCB Assemblies" on page 9-9
    - Section 9-6 "Replace the A6 Adapter, A7 Graphics, and A8 GPIB PCBs" on page 9-11
    - Section 9-4 "Replace the A10 DSP Module PCB Assembly – ND70066" on page 9-8
    - Section 9-12 "Location of Right Side Analog Module Assemblies" on page 9-26
- Analog Module Assemblies
    - Section 9-12 "Location of Right Side Analog Module Assemblies" on page 9-26
    - Section 9-13 "Remove Right Side Analog Modules" on page 9-27
    - Section 9-14 "Prepare Right Side Analog Modules" on page 9-31
    - Section 9-15 "Install the Right Side Analog Modules" on page 9-31

RF Deck Bottom Side Module Replacement Overview

This chapter (Chapter 11, “RF Deck Module Replacement Overview”) provides definitions of the RF Deck module locations and summarizes their removal, replacement, and installation. The configuration of the RF Deck modules is complicated by the instrument model, the equipped option, and the port number. This organization is discussed and multiple tables presented to describe the modules present in each instrument variant. In some cases, specific instructions about removal and installation sequencing with cautions is also described. It also provides a link to module cross references by replacement part number, part name, Anritsu part number, engineering reference number, and RF Deck location. Finally, this chapter provides additional links to each RF Deck area and the modules located there.

- Introduction to RF Deck Nomenclature and Configuration
  - Section 11-2 “RF Deck Chassis Assembly” on page 11-2
- RF Deck Top Side Modules
  - Section 11-3 “RF Deck Top Side Center Modules” on page 11-2
  - Section 11-4 “RF Deck Top Side Right Modules” on page 11-5
  - Section 11-5 “RF Deck Top Side Rear Attenuator Modules - Overview” on page 11-7
  - Section 11-6 “RF Deck Top Side Rear Attenuator Modules - Option 061” on page 11-8
  - Section 11-7 “RF Deck Top Side Rear Attenuator Modules - Option 062” on page 11-9
- RF Deck Bottom Side A18 Modules and the A18 RF Control PCB Assembly
  - Section 11-8 “RF Deck Bottom Side A18 Modules and PCB” on page 11-11
  - Section 11-9 “MS4642A A18 Modules and PCB” on page 11-12
  - Section 11-10 “MS4644A A18 Modules and PCB” on page 11-13
  - Section 11-11 “MS4645A / MS4647A A18 Modules and PCB” on page 11-14
  - Section “” on page 11-15
- RF Deck Bottom Side Port Group Modules
  - Section 11-13 “RF Deck Bottom Side Port Group Modules” on page 11-16
  - Section 11-14 “Finding Module Locations” on page 11-33

The detailed RF Deck module replacement procedures are covered the following four chapters, each of which is described in the sections following.

- Chapter 12, “RF Deck Bottom Side A18 Modules and PCB”
- Chapter 13, “RF Deck Bottom Side Port Modules”
- Chapter 14, “RF Deck Removal and Installation”
- Chapter 15, “RF Deck Top Side Modules”

RF Deck Bottom Side A18 Modules and PCB

This chapter (Chapter 12, “RF Deck Bottom Side A18 Modules and PCB”) describes how to remove each of the components mounted on or within the A18 RF Control PCB Assembly and how to remove the A18 PCB itself. The equipped modules vary depending on the instrument model number. The chapter then concludes with how to install the A18 PCB assembly, and finally how to install the modules mounted on or within it.

- Section 12-3 “Remove A112 SDM – ND70098 – 59772” on page 12-7
- Section 12-4 “Prepare Replacement A112 SDM – ND70098 – 59772” on page 12-9
- Section 12-5 “Install A112 SDM – ND70098 – 59772” on page 12-9
- Section 12-6 “Remove A114 SQM – ND70099 – 60-327” on page 12-11
- Section 12-7 “Prepare Replacement A114 SQM – ND70099 – 60-327” on page 12-13
- Section 12-8 “Install A114 SQM – ND70099 – 60-327” on page 12-15
- Section 12-9 “Remove A108 HBTS/VITS Module – ND70092 or ND70093” on page 12-16

- The A108 Engineering Reference Number refers to two separate components that vary depending on the instrument model.
- MS4642A / MS4644A: A108 High Band Transfer Switch, 40 GHz – ND70092 – 66221 – The abbreviated designator for this component is the A108 HBTS.
- MS4645A / MS4647A: A108 V Integrated High Band Transfer Switch, 70 GHz – ND70093 – 66619 – The abbreviated designator for this component is the A108 VITS.
- Mechanically, the two components are similar enough that the general removal procedure refers to either module as the A108 HBTS/VITS.
- The A108 HBTS/VITS removal and installation process is required for servicing the RF Deck Bottom Side Port Group Modules whenever the port group is connected to the A108. Care must be observed when working with the A108 to prevent damage to its connected semi-rigid coaxial cables and to the module bottom side pins that connect to sockets in the A18 PCB.

- Section 12-10 “Prepare Replacement A108 HBTS/VITS” on page 12-20
- Section 12-11 “Install A108 HBTS/VITS – ND70092 or ND70093” on page 12-20
- Section 12-15 “Remove A18 RF Control PCB – ND70068 – 61929-3” on page 12-24
- Section 12-16 “Prepare Replacement A18 PCB – ND70068 – 61929-3” on page 12-28
- Section 12-17 “Install A18 RF Control PCB – ND70068 – 61929-3” on page 12-28

RF Deck Bottom Side Port Module Groups

This chapter (Chapter 13, “RF Deck Bottom Side Port Modules”) describes the general sequence to remove the modules within each port module group working in general from the A18 PCB Assembly towards the RF Deck Front Panel. The initial sections of this chapter provide identification of the module configurations depending on the instrument model and equipped option.

- Section 13-3 “Modules by Instrument and Option” on page 13-6
- Section 13-4 “MS4642A - Standard No Options - Port Modules” on page 13-7
- Section 13-5 “MS4644A - Standard No Options - Port Modules” on page 13-9
- Section 13-6 “MS4645A / MS4647A - Standard No Options - Port Modules” on page 13-11
- Section 13-7 “MS4645A / MS4647A - Option 051 - Front Panel Loops” on page 13-13
- Section 13-8 “MS4645A / MS4647A - Option 061 - Loops & Two Attenuators” on page 13-15
- Section 13-9 “MS4645A / MS4647A - Option 062 - Loops & Four Attenuators” on page 13-17

These sections provide a general mechanical description of how the port groups are assembled and mated with their brackets. If a bracket is used, both module-to-bracket hardware and bracket-to-chassis hardware must be removed to service the port group. Note that some modules do not have brackets and are held in place by their RF connectors.

- Section 13-10 “Test Port 2 Module Group Assembly” on page 13-19
- Section 13-11 “A107 and A105 Reference Module/Bracket Assembly” on page 13-21
- Section 13-12 “A110 Port 2 and A109 Port 1 Level Detector Modules” on page 13-23
- Section 13-13 “Test Port 1 Module Group Assembly” on page 13-25

This section provides a cross reference to the appropriate procedure to remove, prepare, and install each RF Deck Bottom Side Port Group module. To use the cross reference table, identify your instrument model, its equipped option, and the port group to which it belongs.

- Section 13-14 “Identifying Port Module Removal and Installation Procedures” on page 13-27

These sections provide removal, preparation, and installation procedures for the bottom side High Band Attenuators. These modules can be quickly removed, prepared, and then replaced. Note that the preparation section is for all bottom side High Band Attenuators whether they are standalone units or a component in a port module group.

- Section 13-15 “Option 061/062 - Port 2 b2/Port 1 b1 Attenuators - Removing” on page 13-37

- Section 13-16 “Option 061/062 - Attenuators - Preparing” on page 13-47

These sections provide removal, preparation, and installation procedures “side-attached” modules which have various combinations of brackets and/or harnesses. On the outside of various port module groups, these modules can be quickly removed, prepared, and then replaced.

- Section 13-18 “Side-Attached Modules - Standard/All Options - Removing” on page 13-53
- Section 13-19 “Side-Attached Modules - Preparing” on page 13-60

These concluding procedures take each port module group and describe how to disassemble it module-by-module until the appropriate part is removed, prepared, and then installed. Note that these procedures are based on the equipped option and port. The MS4642A / MS4644A modules and the MS4645A / MS4647A modules are mechanically similar and, in some cases identical, so that then same procedure is used for all four instrument models. The module preparation and installation procedure cross references are not included in this list.

- Section 13-21 “Standard No Options - Test Port 2 Modules - Removing” on page 13-62
- Section 13-23 “Standard No Options - Test Port 1 Modules - Removing” on page 13-71
- Section 13-25 “Option 051/061/062 - Test Port 2 Modules - Removing” on page 13-79
- Section 13-27 “Option 051 - Port 1 Source Modules - Removing” on page 13-85
- Section 13-29 “Option 051/061/062 - Test Port 1 Modules - Removing” on page 13-91
- Section 13-31 “Option 051/061 - Port 2 Source Modules - Removing” on page 13-97
- Section 13-34 “Option 061/062 - Port 1 Source Modules - Removing” on page 13-103
- Section 13-37 “Option 062 - Port 2 Source Modules - Removing” on page 13-109

The final procedure in this chapter describes how to complete a module replacement and reassemble the instrument.

- Section 13-40 “RF Deck Bottom Side - Port Group Modules - Completion” on page 13-116

RF Deck Removal and Installation

This chapter (Chapter 14) describes how to remove the RF Deck from the instrument chassis and how to attach a pair of protective T3545 Test Fixtures. The RF Deck must be removed to service the RF Deck Top Side modules and, if equipped, the top side Low Band Attenuators.

- Section 14-3 “Remove the RF Deck” on page 14-4
- Section 14-4 “Install the RF Deck” on page 14-12

RF Deck Top Side Modules

This chapter (Chapter 15, “RF Deck Top Side Modules”) describes the removal, preparation, and installation procedures for the top side modules equipped on all models with any combination of options.

The first set of procedures deals with the right side modules:

- Section 15-3 “Replace the A113 5-20 GHz Doubler Module” on page 15-5
- Section 15-4 “Replace the A115 Low Band Transfer Switch Module” on page 15-9
- Section 15-5 “Replace the A116/A117 Low Band Bridge Module” on page 15-12

The second set of procedures provide a reference for the top side Low Band Attenuators and how to replace them. Only two attenuators are equipped with Option 061; four attenuators are equipped with Option 062.

- Section 15-7 “Replace the Low Band Source Attenuator” on page 15-18

The third set of procedures provide a reference for the Sampler/LO Distribution Module Assembly and its removal, disassembly, module replacement, reassembly, and re-installation:

- Section 15-8 “SLODM Overview” on page 15-26
- Section 15-10 “Remove the Sampler/LO Distribution Module Assembly” on page 15-41

- Section 15-17 “Install the SLODM onto the RF Deck” on page 15-66

Rear Panel Components

This chapter (Chapter 16, “Rear Panel Components”) describes how to remove the Rear Panel Sub Plate, the Rear Panel Assembly, and then service the underlying components of the A17 Rear Panel PCB Assembly and the Rear Panel Fan Assembly. The chapter concludes with the installing the Rear Panel Assembly and the silk-screened outer Rear Panel Sub-Plate. Note that the Rear Panel removal and installation procedures are referenced in servicing the Power Supply Module, the Motherboard 1 PCB Assembly, and the Digital PCB Fan Assembly chapters. The A17 PCB and Rear Panel Fan preparation and installation procedure cross references are not included in this list.

- Section 16-3 “Remove the Rear Panel Assembly” on page 16-2
- Section 16-4 “Remove the A17 Rear Panel PCB Assembly” on page 16-15
- Section 16-7 “Remove the Rear Panel Fan Assembly” on page 16-19
- Section 16-10 “Installing the Rear Panel Assembly” on page 16-22

Power Supply Module

This chapter (Chapter 17, “Power Supply Module”) describes how to access, remove, and install the Power Supply Module mounted in the Digital PCB Bay. The removal procedure involves removing the chassis side plate and other components to access the module. The preparation section describes how to transfer the bracket and other hardware from the old to the new module.

- Section 17-3 “Remove the Power Supply Module” on page 17-12
- Section 17-4 “Prepare the Replacement Power Supply Module” on page 17-16
- Section 17-5 “Install the Power Supply Module” on page 17-17

Service the Digital Fan Assembly

This chapter (Chapter 18, “Digital PCB Fan Assembly”) describes how to access, disassemble, and finally remove the Digital PCB Fan Assembly. Once is removed, further disassembly is required to access the cooling fan.

- Section 18-2 “Remove the Digital PCB Fan Bracket/Card Guide Assembly” on page 18-2
- Section 18-3 “Prepare the Replacement Digital PCB Fan Assembly” on page 18-18
- Section 18-4 “Install the Digital Fan Bracket Card Guide Assembly” on page 18-23

Motherboard 1 PCB and Motherboard 2 PCB Assemblies

This chapter (Chapter 19, “MB1 and MB2 PCB Replacement Procedures”) describes how to access each of the Motherboards, remove them from the chassis, and then install a replacement PCB. The Motherboard 1 PCB requires significant chassis disassembly to access and remove the PCB.

- Section 19-4 “Remove the Motherboard 2 PCB Assembly” on page 19-12
- Section 19-6 “Install the Motherboard 2 PCB Assembly” on page 19-14
- Section 19-8 “Remove the MB1 PCB Assembly – ND70069 – 61920-3” on page 19-18
- Section 19-10 “Install the Motherboard 1 PCB Assembly” on page 19-20

Full Disassembly Procedures

Note	These two procedures below are not recommended for repair or replacement processes.

The procedures are contained in Appendix C, "Full Disassembly Procedure" describe how to fully disassemble the MS4640A Series VNA into its individual component assemblies, and then how to disassemble each major sub-assembly usually for purposes of recycling the instrument. Note that this procedure is not recommended for servicing the instrument; it is only provided for scrapping the instrument.

- Section C-2 "Full Disassembly Procedures" on page C-1
- Section C-3 "Disassembly Overview for Individual Components" on page C-4

7-4 Common - Prepare Work Area and Safety

Use this procedure to prepare the work area and work service.

Procedure

1. Make sure that antistatic procedures are followed throughout every step of every procedure.
2. An ESD safe work area and proper ESD handling procedures that conform to ANSI/ESD S20.20-1999 or ANSI/ESD S20.20-2007 is mandatory to avoid ESD damage when handling subassemblies or components found in the instrument.
3. The work surface must prevent scratching the instrument and be free of debris.
4. The cart or bench must be able to support the weight of the instrument.

Caution

The weight of the MS4640A VNA is greater than 18 kg (39.6 pounds).

The weight of a fully equipped MS4647A VNA is greater than 26 kg (> 57.3 pounds).

Use two or more people to lift and move the MS4640A Series Vector Network Analyzer.

There is a risk of a back injury if this equipment is lifted by one person.

Make sure that any equipment carts can safely carry the instrument weight.

5. If the RF Deck is removed for servicing, a pair of T3545 RF Deck Fixtures should be attached to protect the loops and modules.
   - See Appendix B, “Recommended VectorStar Maintenance Fixtures” for a description of the T3545 Fixture. It is available from Anritsu or can easily be fabricated locally.
6. When working around the Front Panel or the RF Deck, a blocking device is essential to keep the loops and other components from being damaged.
   - When removing the Front Panel, add a spacer at least 5 cm (~2”) thick under the front of the unit, approximately 10 cm (~4”) in from the instrument front.
   - The spacer should be at least 50 mm (~20”) long.
   - The spacer creates clearance for the Front Panel Loops.
   - A ~50 cm (~20”) length of lumber “2 by 2” provides a perfect spacer.

Danger Before starting any disassembly procedures, ensure that the instrument is disconnected from AC mains supply and has cooled to room temperature.

7-5 Common - Remove Outer Cover

Use this procedure to remove the instrument Outer Cover.

Applicability

Applicable for all MS4640A models, use this procedure to remove the instrument outer cover.

Procedure

1. Observe work area, work surface, and safety preparations.
   - See Section 7-4 “Common - Prepare Work Area and Safety” on page 7-9.

The weight of the MS4640A VNA is greater than 18 kg (39.6 pounds).

The weight of a fully equipped MS4647A VNA is greater than 26 kg (> 57.3 pounds).

Use two or more people to lift and move the MS4640A Series Vector Network Analyzer.

There is a risk of a back injury if this equipment is lifted by one person.

Make sure that any equipment carts can safely carry the instrument weight.

2. If using an equipment cart, secure the cart so it will not move.

Caution

If the instrument handles or rack mount ears/handles are removed, one type MUST be reinstalled before proceeding.

The handles must be in place to remove the Front Panel and to remove the RF Deck.

The handles protect the Front Panel Keys, Rotary Knob, Test Ports, and if installed, the Front Panel Loops. Do not attempt removing the Outer Cover without one of the handle types in place.

In most cases, the instrument is always equipped with regular handles or with combination rack mount ears/handles.

Note The Rear Feet can stay fastened to the Outer Cover and do not need to be removed.

3. Using two people, tilt the VNA up so that it is vertical and resting on its Front Handles as shown below in Figure 7-1. Make sure the instrument is stable before letting go.

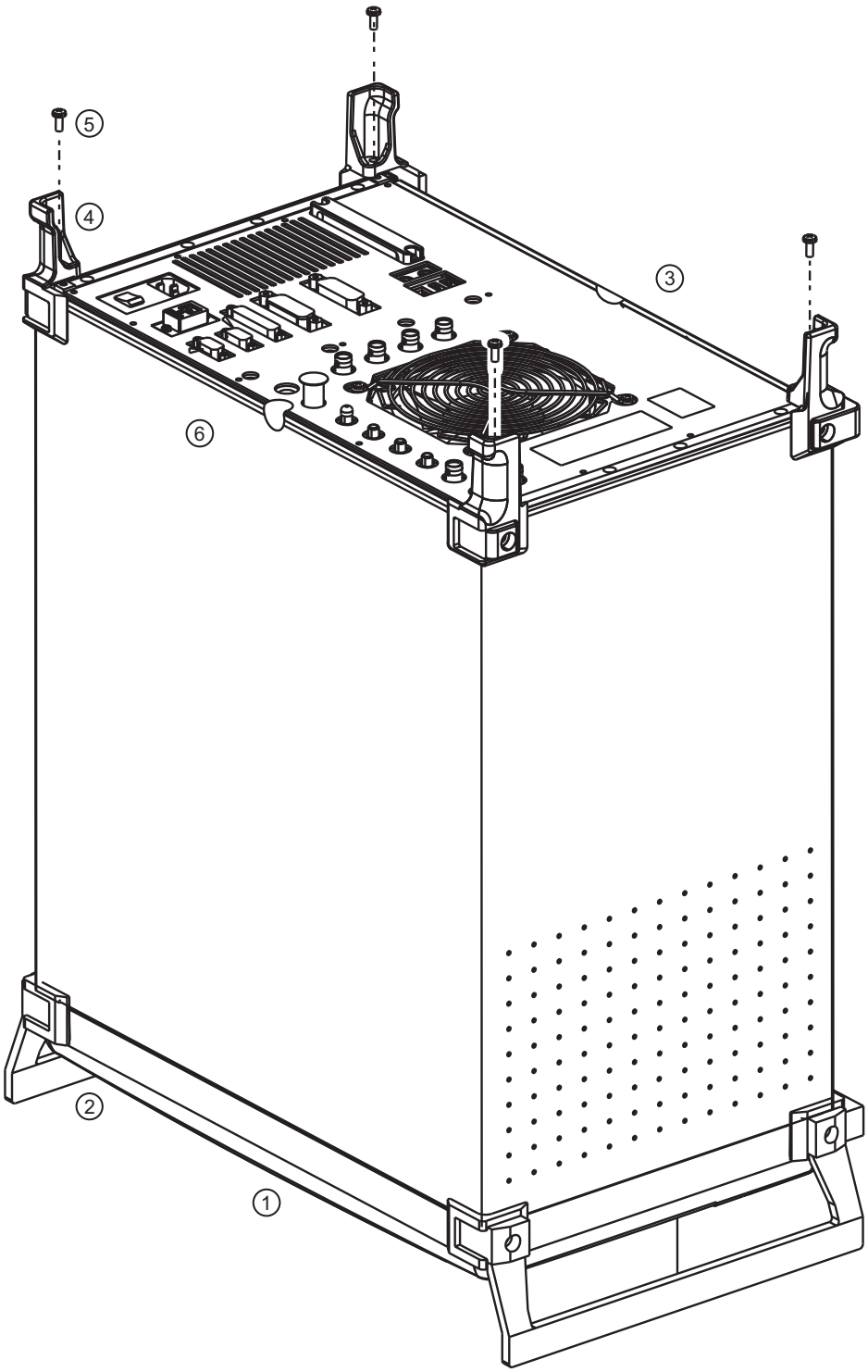

1. Front Panel	4. Rear Panel Feet – Four each. Can stay in place during all replacement procedures.
2. Front Panel Handles – Two each. Must be installed before doing this procedure.	5. Outer Cover Screws – Pan head Phillips M4 × 10 mm
3. Rear Panel and Bottom of Instrument	6. Outer Cover and Top of Instrument

Figure 7-1. Outer Cover Assembly

4. Remove the four (4) pan head Phillips M4 × 10 mm screws holding the Outer Cover at the Rear Panel. The screws go through the Rear Feet into the inner chassis.
5. Again using two people, one person holds the instrument while the other slides the Outer Cover up and off the instrument.
6. Again using two people, tilt the instrument back down so it is oriented right-side up.

7-6 Common - Remove Inner Cover

Use this common procedure to remove the Inner Top Cover after removing the Outer Cover. The Inner Cover removal provides access to most internal assemblies.

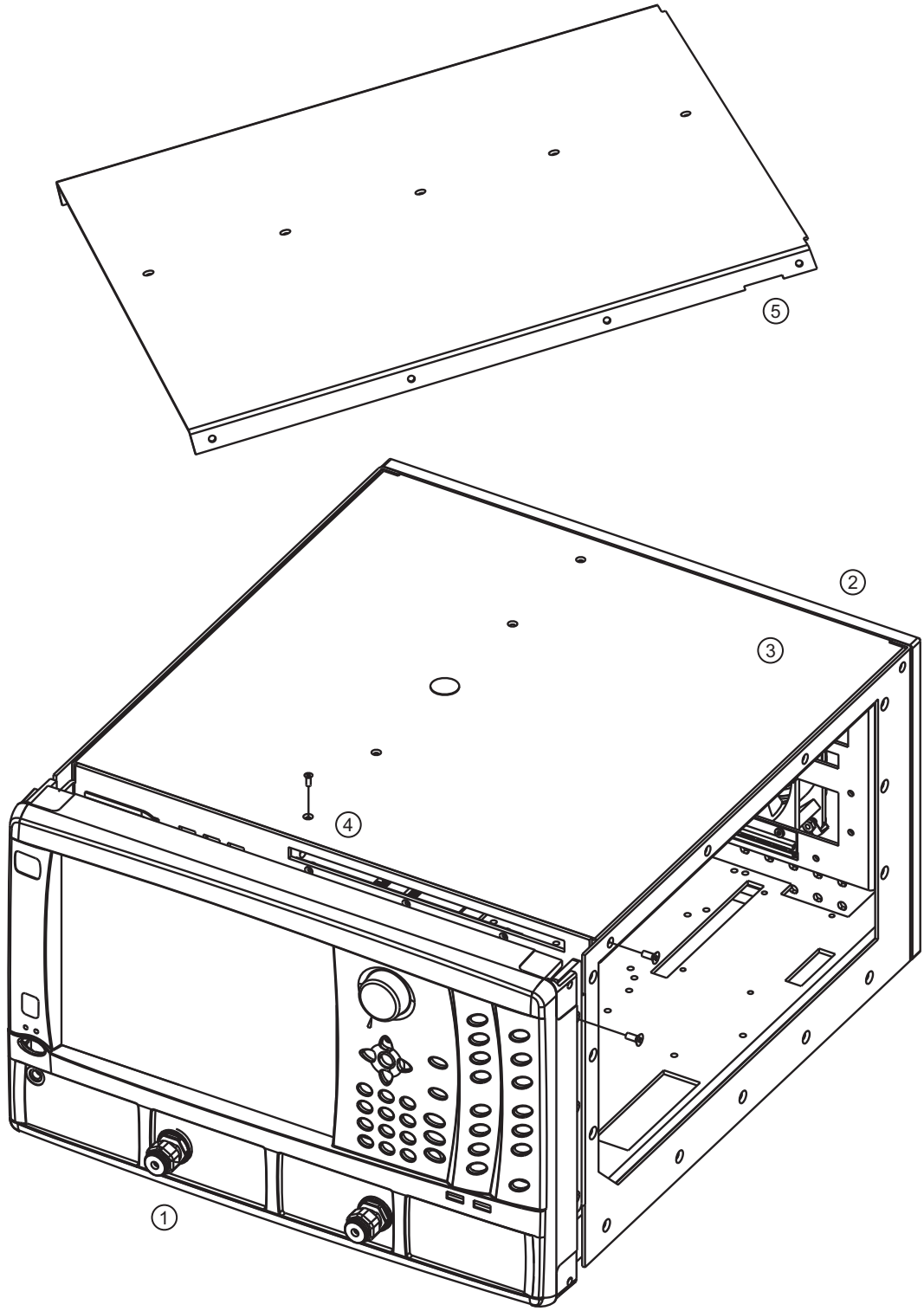

Figure 7-2. Inner Cover – Front/Rear Orientation – Location of Screws (1 of 2)

Instrument with Outer Cover removed. 1. Front Panel 2. Rear Panel 3. Inner Top Cover	4. Mounting Screws • 13 screws total, five (5) screws on top and four (4) on each side • All mounting screws are flat head Phillips Head M3 × 6 mm • The top center screw is covered by a Calibration Seal – 3-48371 5. Inner Top Cover Orientation – Note the orientation with the notches toward the Rear Panel.

Figure 7-2. Inner Cover – Front/Rear Orientation – Location of Screws (2 of 2)

Procedure

1. Observe work area, work surface, and safety preparations.

- See Section 7-4 “Common - Prepare Work Area and Safety” on page 7-9.

2. Remove the Outer Cover.

- See Section 7-5 “Common - Remove Outer Cover” on page 7-10.

3. From the top of the Inner Cover, remove the five (5) flat-head Phillips M3 × 6 screws. The center screw is covered by a Calibration Seal.

4. On the left chassis side, remove the four (4) flat head screws.

5. On the right chassis side, remove the four (4) flat head screws.

6. Lift up, remove, and set the Inner Cover aside.

7. For installation, note that the panel notches go towards the Rear Panel.

7-7 Common - Install Inner Cover

Use this procedure to install the Inner Cover as shown in Figure 7-2 above.

Procedure

1. Inspect the chassis to make sure all connections are complete, correctly torqued, and all PCBs correctly seated.
2. Place the Inner Cover loosely in position. The small protruding lip and notched end on the cover goes toward the rear panel.
3. Loosely insert the flathead Phillips M3 × 6 mm screws. Do not tighten. On top, insert five (5) screws; on each side, insert four (4) screws on each side; 13 screws total.
4. When the screws are in place, working from the top center, tighten all screws. Then at each side, again working from the center, tighten all screws.
5. If appropriate, apply a Calibration Seal over the top center mounting screw.

7-8 Common - Install Outer Cover

This procedure installs the Outer Cover while the instrument is standing on its Front Panel Handles.

Applicability

- Applicable for all MS4640A models with any combination of options.

Procedure

The procedure is shown in Figure 7-3 below.

1. Observe work area and work surface preparations.
   - See Section 7-4 “Common - Prepare Work Area and Safety” on page 7-9.

The weight of the MS4640A VNA is greater than 18 kg (39.6 pounds). The weight of a fully equipped MS4647A 70 GHz VNA is greater than 26 kg (> 57.3 pounds). Use two or more people to lift and move the MS4640A Series Vector Network Analyzer. There is a risk of a back injury if this equipment is lifted by one person. Make sure that any equipment carts can safely carry the instrument weight.

2. If using an equipment cart, secure the cart so it will not move.
3. Loosen the handle screws slightly to provide more clearance for the cover flange lip. There are four (4) screws total, two (2) on each side.
4. Using two people, tilt the VNA up so that it is vertical on its Front Panel until it is resting on its Front Handles. Make sure the instrument is stable before letting go.

5. When viewing the Outer Cover, observe the following orientation:

- The edge with the lip goes towards the front and the feet towards the rear.
- The side with the single block of ventilation holes goes on the right side.
- The side with two blocks of ventilation holes go on the left side.
- The riveted edges goes toward the bottom.

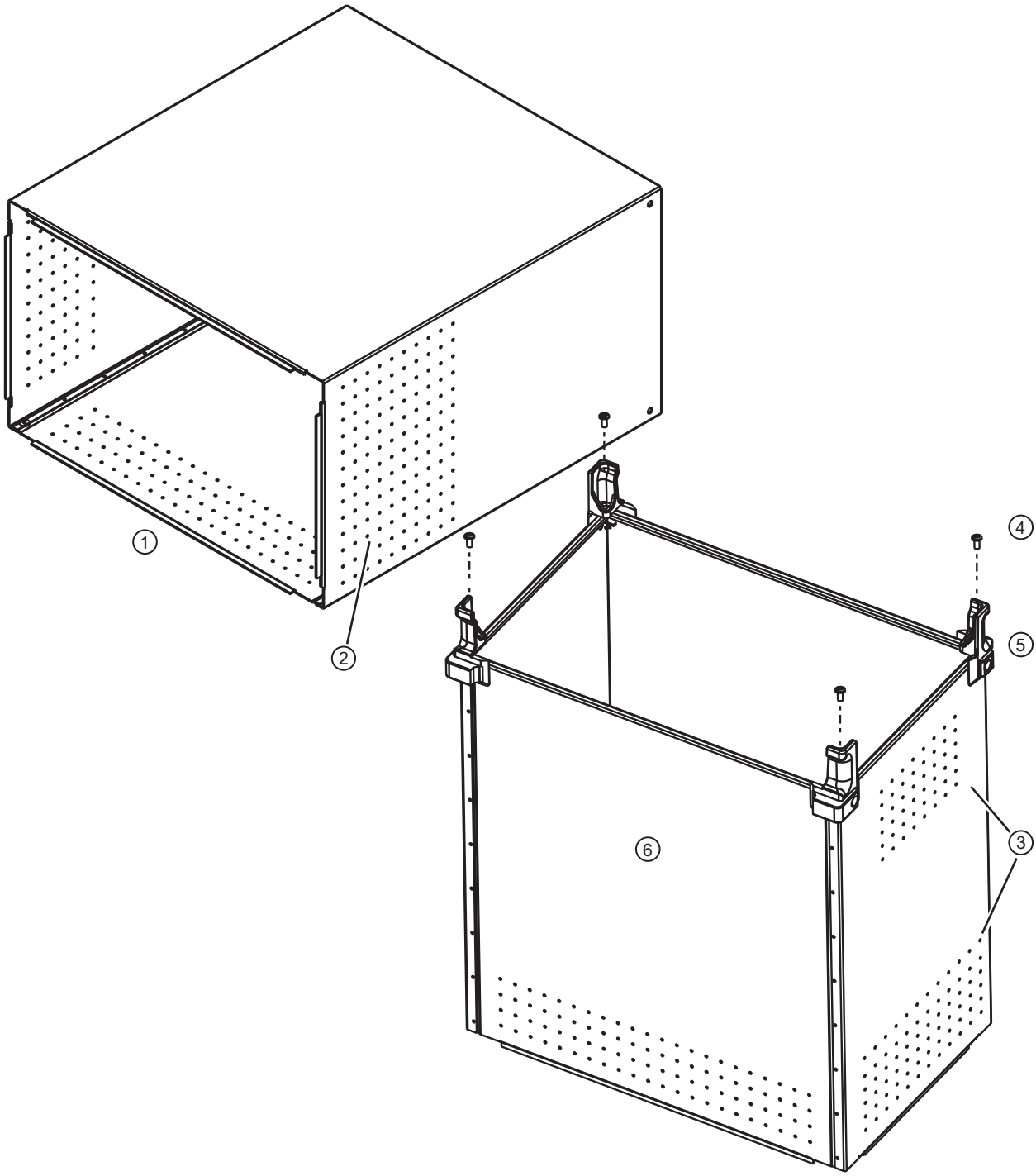

Figure 7-3. Front Cover Orientation (1 of 2)

1. Outer Cover Front	4. Cover Fastening Screws (into Inner Chassis)
2. Right Side Ventilation Block	5. Rear Feet
3. Left Side Ventilation Blocks (viewed from bottom)	

Figure 7-3. Front Cover Orientation (2 of 2)

6. Using two people, one person should slide on the Outer Cover over the unit. The other person should hold the instrument.
7. Loosely set the Outer Cover flange under the handles.
8. Insert the four (4) pan head Phillips M4 × 10 mm screws into the outer cover through the sides of the feet.
9. When the Outer Cover is correctly positioned, tighten the four (4) cover retaining screws.
10. Tighten the four (4) handle screws.
11. Again using two people, tilt the instrument down until it is right-side up.

Chapter 8 — External Component Procedures

8-1 Introduction

Use this procedure to remove and replace the front panel test ports, the front panel access loops, the rear panel access loops, and the rear panel SATA Solid State Drive (SSD) / Hard Disk Drive (HDD). The procedures covered here are:

- Section 8-2 “Replace Front Panel Test Ports” on page 8-2
- Section 8-3 “Replace Front Panel Loops” on page 8-4
- Section 8-4 “Replace Rear Panel Loops” on page 8-5
- Section 8-5 “Replace the Solid State Drive/Hard Disk Drive Assembly” on page 8-6

Note

The instrument Model Identity Label – 3-60124-X must be ordered separately and can be applied at the end of the Front Panel installation procedure or with the covers on if just replacing the label. The label part number varies depending on the instrument model. Each label is valid for any combination of options for that model:

- MS4642A Model Identity Label – No ND – 3-60124-9
- MS4644A Model Identity Label – No ND – 3-60124-10
- MS4645A Model Identity Label – No ND – 3-60124-13
- MS4647A Model Identity Label – No ND – 3-60124-11

The identity label replacement instructions are covered in Chapter 10, “Front Panel Assembly” in Section 10-5 “Prepare the Replacement Front Panel Assembly” on page 10-16.

8-2 Replace Front Panel Test Ports

Use this procedure to replace a Front Panel Test Port for any combination of options or no options. Also use this procedure to remove and later replace the same Test Port to access RF Deck Bottom Side modules, typically the Test Port Couplers.

Parts and Applicability

The Front Panel Test Ports are available on all instruments and are usually the same type as the K (m) or V (m) Test Port connectors. It is possible to install a K Test Port on a V instrument and vice versa. There are two (2) Front Panel Test Ports per instrument. The replacement part kit comes with one (1) Test Port.

- MS4642A / MS4644A: Test Port K Connector – No ND – 34YK50C
- MS4645A / MS4647A: Test Port V Connector – No ND – 34YV50C

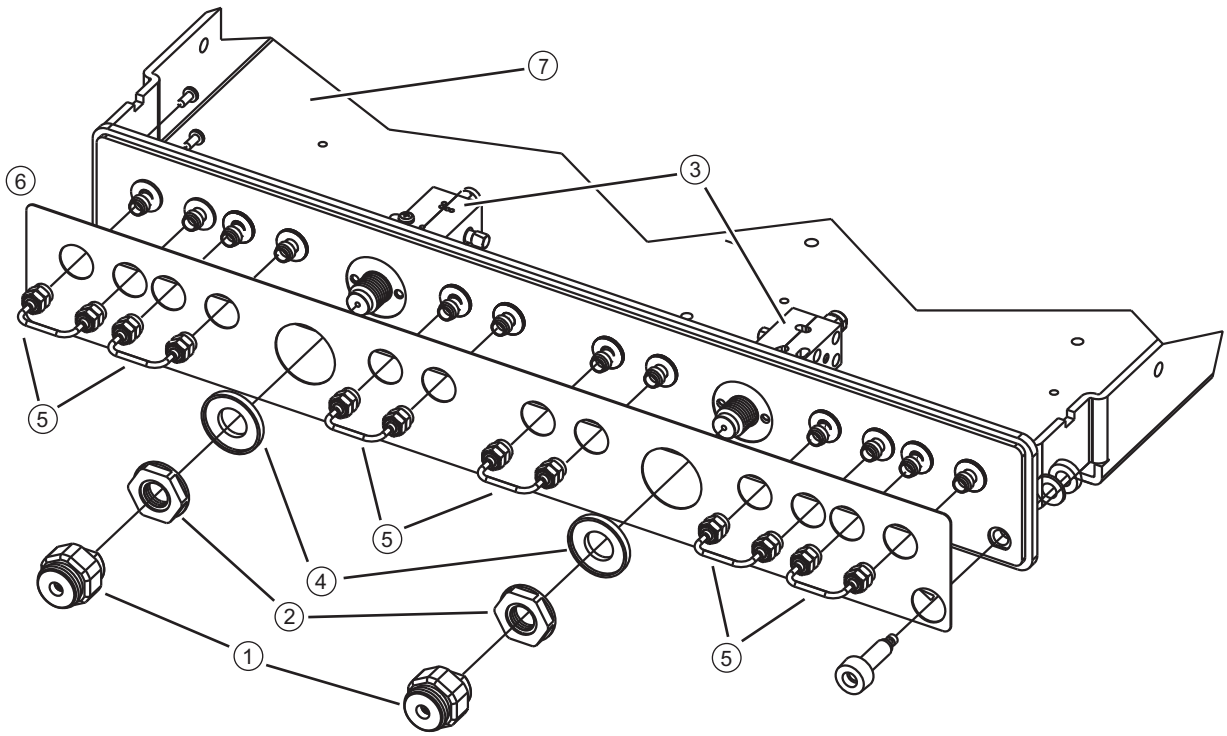

The RF Deck Front Panel upside down with the bottom of the RF Deck visible. 1. Test Port Adapter 2. Test Port Nut 3. Test Port Couplers • Located inside the RF Deck and not visible with the instrument covers on. • Only the protruding and threaded Coupler connector is visible with the covers on.	4. Test Port Thrust Washer 5. Front Panel Loop Cables • Only with Option 051, 061, or 062. • Connector types (K or V) match the Test Port Connector type. 6. RF Deck Overlay Panel. 7. RF Deck Chassis.

Figure 8-1. Test Port Connectors and Related Hardware

Procedure

1. Make sure you have the correct front panel Test Port Adapter connector depending on your instrument model.

Remove the Test Port Adapter

2. Use a 1/2” torque end wrench set to 60 lbf · in to loosen the Test Port Adapter. When loose, remove the adapter by hand.
3. Carefully remove the Test Port Adapter from the underlying threaded coupler, taking care to protect the Test Port Center Pin.
   - The test port coupler is held in place with a nut and thrust washer which need not be removed in this procedure.
4. The replacement process is the reverse.

Install the Test Port Adapter

5. Carefully place the Test Port Adapter on the threaded coupler shaft, making sure the Test Port Center Pin is correctly aligned.
6. Thread the replacement on by hand, making sure the threads are correctly engaged and not cross threaded.
7. When fully threaded on, tighten to finger tight.
8. Torque the Test Port Adapter using a 1/2” torque end wrench set to 60 lbf · in.

8-3 Replace Front Panel Loops

The Front Panel Loops are available if the instrument is equipped with Option 051, 061, or 062. The K (m) or V (m) loop connectors are the same as the instrument Test Port connector type. There are six (6) Front Panel Loops per instrument. The replacement part kit comes with one (1) loop.

Parts and Applicability

- MS4642A / MS4644A: Front Panel Loops, K Connectors – No ND – 62112-1
- MS4645A / MS4647A: Front Panel Loops, V Connectors – No ND – 62109-1
    - There are six (6) Front Panel Loops per instrument.
    - The replacement part kit comes with one (1) loop.
    - For instruments equipped with Option 051, 061, or 062.

Procedure

1. Make sure you have the correct Front Panel Loop connector for your instrument model.
2. Loosen the Front Panel Loop using a 5/16” torque end wrench set to 8 lbf · in.
    - Recommended is a 5/16” Torque End Wrench – 8 lbf · in (8 mm 0.9 N · m) – Anritsu 01-201 or equivalent.
3. Once loose, remove the loop connector by hand.
4. Replace the loop, making sure both connectors are correctly seated, aligned, and threaded. Tighten both connectors finger tight.
    - “Walk the replacement loop on” gently to make sure it is in place with the center pins aligned.
5. When both connectors are finger tight, use a 5/16” torque wrench and torque to 8 lbf · in.

8-4 Replace Rear Panel Loops

The Rear Panel Loops are available if the instrument is equipped with Option 051, 061, or 062. The loop connectors are all SMA (m-m). There are six (6) Rear Panel Loops per instrument. The replacement part kit comes with one (1) loop.

Parts and Applicability

- Rear Panel Loop, SMA (m-m) – No ND – 62112-1
  - For all instrument models with Option 051, 061, or 062.
  - The instrument is equipped six (6) loops.
  - The replacement kit comes with one (1) loop.

Procedure

1. Loosen the to-be-replaced Rear Panel Loop using a 5/16” torque end wrench set to 8 lbf · in.
   - Recommended is a 5/16” Torque End Wrench – 8 lbf · in (8 mm 0.9 N · m) – Anritsu 01-201 or equivalent.
2. Once loose, remove the loop connector by hand.
3. Replace the loop, making sure both connectors are correctly seated, aligned, and threaded. Tighten both connectors finger tight.
   - “Walk the replacement loop on” gently to make sure it is in place with the center pins aligned.
4. When both connectors are finger tight, use a 5/16” torque wrench and torque to 8 lbf · in.

8-5 Replace the Solid State Drive/Hard Disk Drive Assembly

Use this procedure to replace the SATA Solid State Drive (SSD) Assembly or the Hard Disk Drive (HDD) Assembly. Note that these replacement parts can only be used to replace a defective HDD/SSD and no additional operating system license is provided with this replacement unit.

If additional SSDs or HDDs are required with separate licenses for environments such as high security operations, order instead the SSD/HDD Option MS4640A-004.

Parts and Applicability

- Solid State Drive – ND73934 – 67861
  - The SATA SSD is used on VNAs with S/N 1133242 and higher.
  - If equipped, the SSD is compatible with all VNA models equipped with any combination of options.
- Hard Disk Drive – ND70071 – 62091
  - The SATA HDD is used on VNAs with S/N 1132241 and lower.
  - If equipped, the HDD is compatible with all VNA models equipped with any combination of options.

Identification

Figure 8-2. Solid State Drive (left) and Hard Disk Drive (right)

Procedure

1. Using a flat head screwdriver, loosen and remove the two (2) captive screws holding the SSD/HDD assembly into the chassis.
2. Pulling gently, remove the SATA SSD/HDD assembly from the chassis.
3. Insert the replacement SSD/HDD into the slot.
4. Press the SSD/HDD into its mating socket on the Motherboard 2 PCB and gradually tighten the two (2) flat head screws.

5. After the replacement SATA SSD/HDD is installed, Microsoft Windows needs to be re-activated after installed to the instrument.
6. The original Windows license key (on the Rear Panel) is re-used.

Chapter 9 — Remove and Install Digital/Analog PCBs

9-1 Introduction

The chapter describes how to remove the digital and analog printed circuit board (PCB) assemblies from the instrument, remove and replace any mounted daughter boards, and then install the removed assemblies into the instrument PCB bays. It covers the following procedures:

- Digital PCB Orientation
  - Section 9-2 “Top Side Digital PCBs” on page 9-2
- Digital PCB General Removal
  - Section 9-3 “Remove Digital PCB Assemblies” on page 9-7
- Replace the Phase 1/Phase 2 A10 DSP Module PCB Assembly
  - Section 9-4 “Replace the A10 DSP Module PCB Assembly – ND70066” on page 9-8
- Replace the Phase 1 Top Side Digital PCB Assemblies
  - Section 9-5 “Replace the A3 SBC and A4 USB PCB Assemblies” on page 9-9
  - Section 9-6 “Replace the A6 Adapter, A7 Graphics, and A8 GPIB PCBs” on page 9-11
  - Section 9-7 “Install the Phase 1 Top Side Digital PCBs” on page 9-15
- Replace the Phase 2 Top Side Digital PCB Assemblies
  - Section 9-8 “Replace the Phase 2 Carrier PCB and Daughter-Boards” on page 9-16
  - Section 9-10 “Reassemble the Carrier Board PCB Assembly” on page 9-23
  - Section 9-11 “Install the Phase 2 Carrier Board PCB – ND73874 – 3-72444-3” on page 9-25
- Analog Module PCB Orientation
  - Section 9-12 “Location of Right Side Analog Module Assemblies” on page 9-26
- Remove and Replace the Analog Module PCB Assemblies
  - Section 9-13 “Remove Right Side Analog Modules” on page 9-27
  - Section 9-14 “Prepare Right Side Analog Modules” on page 9-31
  - Section 9-15 “Install the Right Side Analog Modules” on page 9-31

9-2 Top Side Digital PCBs

Summary

Use this procedure to remove the digital PCB assemblies to either replace one or more digital PCBs or to access a deeper dwelling component.

Parts and Applicability

All VNAs

Used in all Phase 1 and Phase 2 MS4640A Series VNAs with any model and any combination of options:

- A10 DSP Module PCB Assembly – ND70066 – 61933-3

Caution	The A10 PCB contains model configuration data which is unique to each instrument. The replacement board is pre-configured at the Factory for the targeted instrument. DO NOT install the A10 PCB on a different instrument. If a VectorStar A10 DSP Module is removed and installed in any other VectorStar VNA, the data in the module's non-volatile memory will be corrupted.

- A4 USB Controller PCB Assembly – ND70062 – 65412-4
  - In Phase 1, the A4 USB PCB is mounted on the A3 SBC PCB.
  - In Phase 2, the A4 USB PCB is mounted on the Carrier Board PCB Assembly (CB PCB)
- A8 GPIB Module PCB Assembly – ND70065 – 65413-3
  - In Phase 1, the A8 GPIB PCB is mounted on the A6 Adapter PCB.
  - In Phase 2, the A8 GPIB PCB is mounted on the CB PCB.

Phase 1 VNAs

The Phase 1 top side digital PCBs are used in VNAs with S/N 1132241 and lower, with any model and any combination of options.

- A3 Single Board Computer PCB Assembly – ND70061 – 3-59632 (PCB) and 3-2000-1525 (SODIMM)
  - The A4 USB PCB is mounted on the A3 SBC PCB.
- A6 cPCI-PMC Adapter Card PCB Assembly – ND70063 – 3-2000-1485
  - The A7 Graphics PCB and the A8 GPIB PCB are mounted on the A6 Adapter PCB.
- A7 Graphic Adapter PCB Assembly – ND70064 – 3-2000-1517
  - This PCB is mounted as a daughter board on the A6 PCB.

Phase 2 VNAs

The Phase 2 top side digital PCBs are used in VNAs with S/N 1133242 and higher, and in any VNA model with any option combination.

- Carrier Board PCB (CB PCB) Assembly – ND73874 – 3-72444-3
  - The CB PCB front-side daughter boards are: SBC, SODIMM (2 each), A4 USB, and A8 GPIB PCBs.
  - The CB PCB back-side daughter board is the GPU PCB.
- Graphics Processor Unit (GPU PCB) PCB Assembly – ND73876 – 3-2000-1661
  - Includes heat sink
  - Mounts on back side of the CB PCB.
- Single Board Computer (SBC PCB) – ND73875 – 3-2000-1668
  - Includes heat sink
  - Mounts on front side of the CB PCB.

- Small Outline Dual In-line Memory Module (SODIMM) – No ND – 3-2000-1671
  - Mounts on the front side of the SBC PCB.
  - Two (2) per instrument
  - One (1) per replacement kit

Digital PCB Locations

The figure below shows the instrument chassis with the covers off and the locations of the Phase 1 Digital PCB Assemblies.

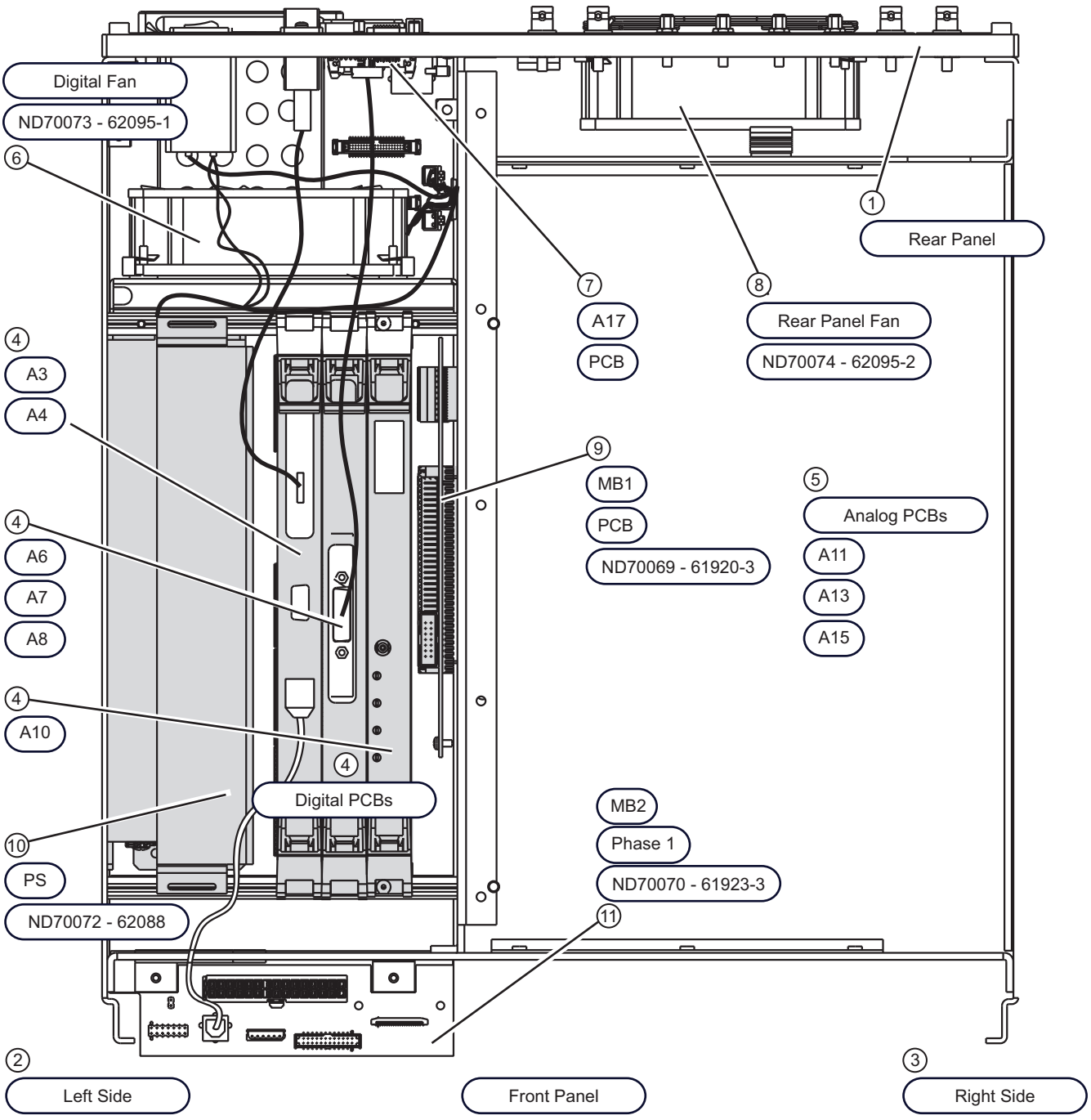

Figure 9-1. Digital PCB Locations – Phase 1 VNAs (1 of 2)

Phase 1 Digital PCB Orientation

1. Rear Panel
2. Left Side – Left side of instrument when viewed from the Front Panel.
3. Right Side – Right side of instrument when viewed from the Front Panel.

Digital Section

4. Digital PCBs – PCBs mounted vertically in the left side digital PCB bay. They seat into the backplane connectors on the horizontally mounted Motherboard 2 PCB Assembly – ND70070 – 61923-3.
   - A3 Single Board Computer (SBC) PCB Assembly – ND70061
   - A4 USB Controller PCB Assembly – ND70063. Mounted on A3.
   - A6 cPCI-PMC Adapter Card PCB Assembly – ND70063.
   - A7 Graphics Adapter Card PCB Assembly – ND70064. Mounted on A6.
   - A8 GPIB Module PCB Assembly – ND70065. Mounted on A6.
   - A10 Digital Signal Processing (DSP) Module PCB Assembly – ND70066.

Analog Section

5. Analog Modules – The PCB-like modules are mounted horizontally in the right side analog PCB bay. They seat into the backplane connectors on the vertically mounted Motherboard 1 PCB Assembly – ND70069 – 61920-3.
   - A11 IF Band Module – ND70076 – 62080 – Upper
   - A13 Source Module – ND70077 – 62082 or ND73202 – 62082-1 – Middle
   - A15 Low Band Receiver Module – ND70075 – 62079 – Lower
6. Digital PCB Fan Assembly – ND70073 – 62095-1 – With 165 mm cable harness and plug.
7. A17 Rear Panel PCB Assembly – ND70067 – 61924-3
   - Located inside the Rear Panel Chassis Assembly.
   - Provides connectors for the Serial, External I/O,IEEE 488.2 GPIB, and Dedicated GPIB Ports.
8. Rear Panel Fan Assembly – ND70074 – 62095-2 – With 330 mm cable harness and plug.
9. Motherboard 1 (MB1) PCB Assembly – ND70069 – 61920-3. This PCB seats into a backplane connector on the Motherboard 2 PCB Assembly – ND70070 – 61923-3.
10. Phase 1 Power Supply Module Assembly and Cable Harness – ND70072 – 62088 – With 3-72058 Cable Harness
11. Phase 1 Motherboard 2 (MB2) PCB Assembly – ND70070 – 61923-3

Figure 9-1. Digital PCB Locations – Phase 1 VNAs (2 of 2)

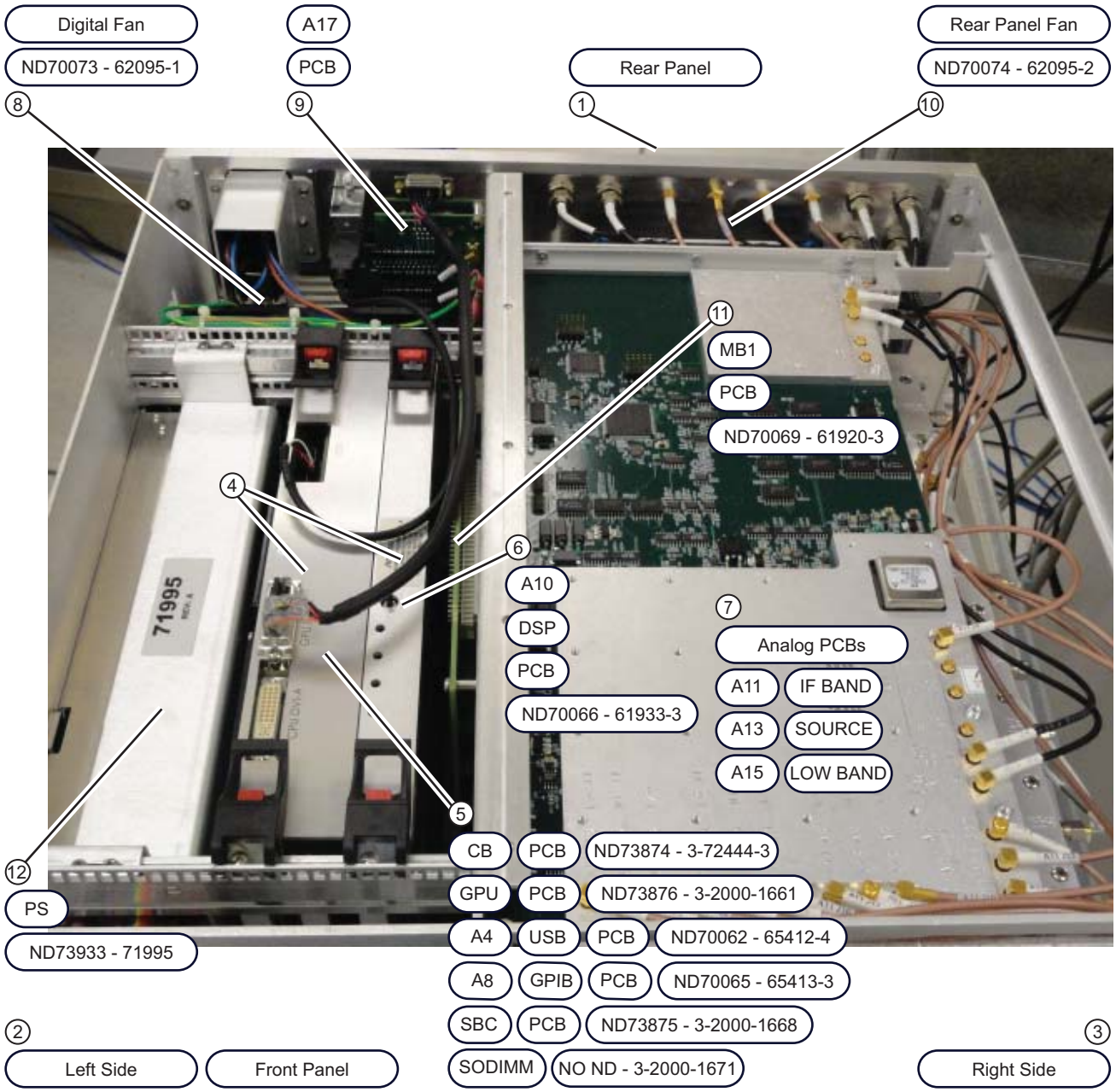

Figure 9-2. Digital PCB Locations – Phase 2 VNAs (1 of 2)

Phase 2 Digital PCB Orientation

1. Rear Panel
2. Left Side – Left side of instrument when viewed from the Front Panel.
3. Right Side – Right side of instrument when viewed from the Front Panel.

Digital PCB Section

4. Digital PCBs – PCBs mounted vertically in the left side digital PCB bay to the left of the Power Supply. They seat into the backplane connectors on the horizontally mounted Phase 2 Motherboard 2 PCB Assembly – ND73878 – 3-72813-3 (not shown)
5. Carrier Board PCB (CB PCB) Assembly – ND73874 – 3-72444-3 – Mounted on the CB PCB are:
   - Graphics Processor Unit (GPU PCB) PCB Assembly – ND73876 – 3-2000-1661 – Mounts on back of CB PCB.
   - A4 USB Controller PCB Assembly – ND70062 – 65412-4 – Mounts on front of CB PCB.
   - A8 GPIB Module PCB Assembly – ND70065 – 65413-3 – Mounts on front of CB PCB.
   - Single Board Computer (SBC PCB) – ND73875 – 3-2000-1668 – Mounts on front of CB PCB.
   - Small Outline Dual In-line Memory Module (SODIMM) – No ND – 3-2000-1671 – Mounts on the front side of the SBC PCB. Two (2) per instrument. One (1) per replacement kit.
6. A10 Digital Signal Processor PCB Assembly – ND70066 – 61933-3

Analog PCB Section

7. Analog PCB Modules – The PCB-like modules are mounted horizontally in the right side analog PCB bay. They seat into the backplane connectors on the vertically mounted Motherboard 1 PCB Assembly – ND70069 – 61920-3.
   - A11 IF Band Module – ND70076 – 62080 – Upper
   - A13 Source Module – ND70077 – 62082 or ND73202 – 62082-1 – Middle
   - A15 Low Band Receiver Module – ND70075 – 62079 – Lower

Rear Panel

8. Digital PCB Fan Assembly – ND70073 – 62095-1 – With 165 mm cable harness and plug.
9. A17 Rear Panel PCB Assembly – ND70067 – 61924-3 – Located inside the Rear Panel Chassis Assembly. Provides connectors for the Serial, External I/O, IEEE 488.2 GPIB, and Dedicated GPIB Ports.
10. Rear Panel Fan Assembly – ND70074 – 62095-2 – With 330 mm cable harness and plug.
11. Motherboard 1 (MB1) PCB Assembly – ND70069 – 61920-3
12. Phase 2 Power Supply Module and Cable Harnesses – ND73933 – 71995 – With Power Supply Cable – 3-71996 and 3.3 Volt Sense Cable – 3-67873

Figure 9-2. Digital PCB Locations – Phase 2 VNAs (2 of 2)

9-3 Remove Digital PCB Assemblies

Procedure

Common Procedures

1. Prepare work area, work surface, and observe safety issues.
   - See Section 7-4 “Common - Prepare Work Area and Safety” on page 7-9.
2. Remove Outer Cover.
   - See Section 7-5 “Common - Remove Outer Cover” on page 7-10.
3. Position the instrument so that it is right-side up, RF deck down.
4. Remove Inner Top Cover.
   - See Section 7-6 “Common - Remove Inner Cover” on page 7-13.

General Procedure

5. First remove any cables connected to the Digital section PCBs.
   - Phase 1 Digital PCB Connections
     - A6 Adapter and A7 Graphics PCB with cable soldered onto the Rear Panel XGA/VGA 15-pin D-Sub Connector.
     - A3 Single Board Computer PCB with cable to the Rear Panel USB 2.0 Type B Port.
   - Phase 2 Digital PCB Connections
     - Carrier Board PCB J23 connector with cable to Rear Panel XGA/VAG 15-pin D-Sub Connector.
6. Remove the screws holding the PCB assembly in place, pull up the latches, and then pull up straight up until the PCB assembly is clear of the chassis.
7. If the PCBs are being removed to access another part, set aside in a static-free environment and repeat until all PCBs are out. Then proceed with other removal procedures as required.
8. If removing a PCB assembly in order to replace it or one of its daughter-boards, proceed with the appropriate step below.

Disassembling Phase 1 Digital PCBs

9. To disassemble the Phase 1 PCB assemblies, use the following procedure sections:
   - Section 9-4 “Replace the A10 DSP Module PCB Assembly – ND70066” on page 9-8
   - Section 9-5 “Replace the A3 SBC and A4 USB PCB Assemblies” on page 9-9
   - Section 9-6 “Replace the A6 Adapter, A7 Graphics, and A8 GPIB PCBs” on page 9-11
10. To install the Phase 1 Digital PCBs into the chassis, continue with:
    - Section 9-12 “Location of Right Side Analog Module Assemblies” on page 9-26 below.

Disassembling Phase 2 Digital PCBs

11. To disassemble the Phase 2 PCB assemblies, use the following procedure sections:
    - Section 9-4 “Replace the A10 DSP Module PCB Assembly – ND70066” on page 9-8
    - Section 9-8 “Replace the Phase 2 Carrier PCB and Daughter-Boards” on page 9-16
    - Section 9-9 “Remove the Carrier Board Daughter-Boards” on page 9-20
12. To reassemble the CB PCB after replacing it or one of its daughter-boards, use this section:
    - Section 9-10 “Reassemble the Carrier Board PCB Assembly” on page 9-23
13. , When replacement is complete, continue with this section:
    - Section 9-11 “Install the Phase 2 Carrier Board PCB – ND73874 – 3-72444-3” on page 9-25

9-4 Replace the A10 DSP Module PCB Assembly – ND70066

Use this procedure to replace the A10 DSP Module PCB Assembly – ND70066 or to remove it to access deeper dwelling components. The A10 DSP PCB Assembly is used in both Phase 1 and Phase 2 VNAs.

Parts and Applicability

- A10 Digital Signal Processing (DSP) PCB Assembly – ND70066 – 61933-3
- The A10 PCB is used on both Phase 1 and Phase 2 VNAs
- The A10 PCB is used on any VNA model with any combination of options.

Caution	The A10 PCB contains model configuration data which is unique to each instrument. The replacement board is pre-configured at the Factory for the targeted instrument. DO NOT install the A10 PCB on a different instrument. If a VectorStar A10 DSP Module is removed and installed in any other VectorStar VNA, the data in the module's non-volatile memory will be corrupted.

Procedure

1. As described in the section above, remove the A10 DSP Module PCB Assembly from the chassis.
2. There are no field replaceable components on the A10 DSP Module PCB Assembly.
3. When ready, slide the A10 DSP Module PCB Assembly into its card cage slots until the latches click. Fasten it in place using the two (2) captive screws.
4. To install all of the top side digital PCBs, see Section 9-12 "Location of Right Side Analog Module Assemblies" on page 9-26 below.

9-5 Replace the A3 SBC and A4 USB PCB Assemblies

Use this procedure to replace the A3 Single Board Computer PCB Assembly and/or replace the A4 USB Controller PCB Assembly which is mounted on the A3 PCB.

Note	There are four (4) configuration DIP Switches on the A3 PCB which are set at the factory. Each DIP switch has four (4) individual switches. Do not change the DIP Switch settings.

Identification – A3 SBC PCB and A4 USB PCB

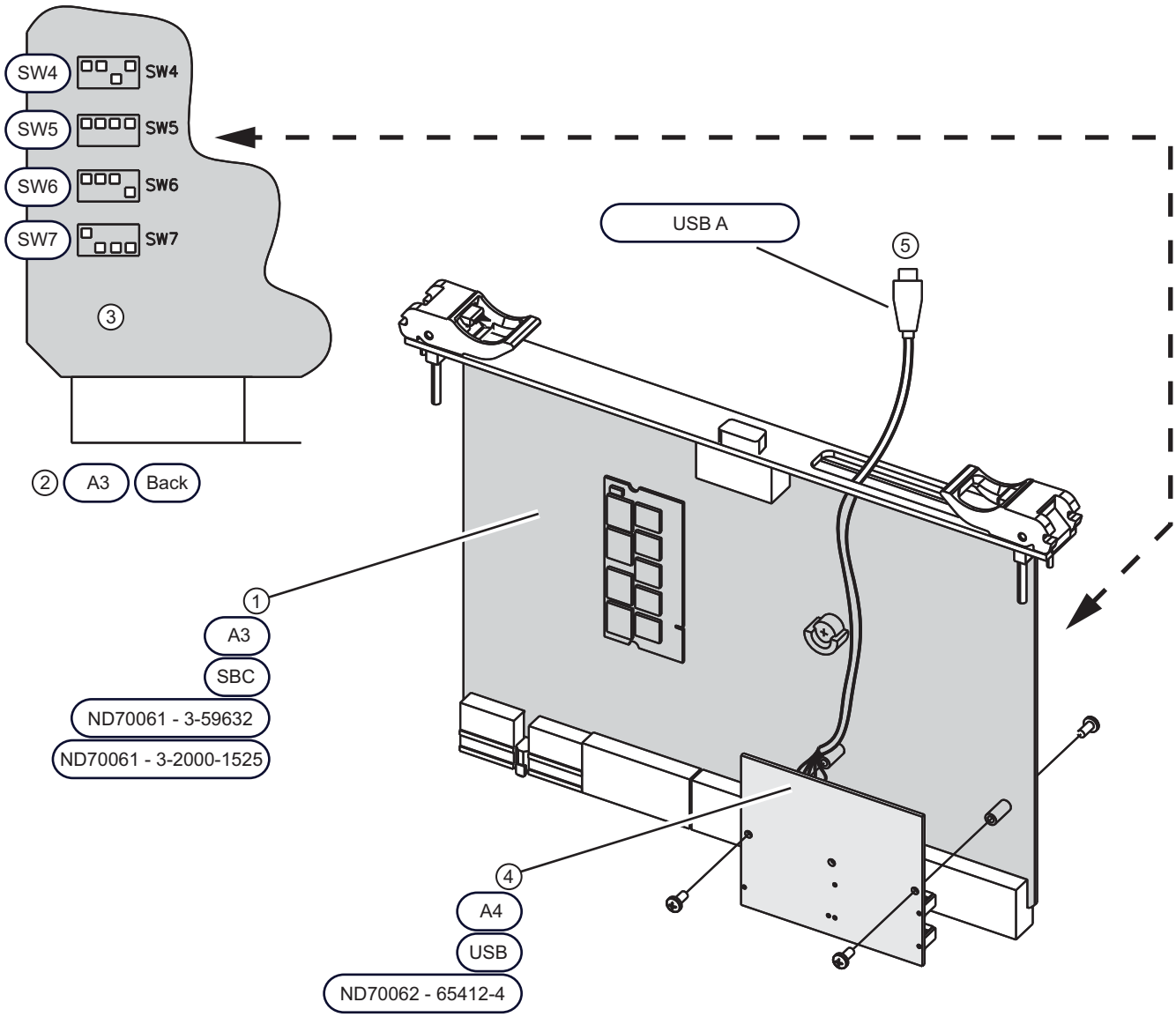

Figure 9-3. Phase 1 – A3 Single Board Computer and A4 USB Controller PCB Assemblies (1 of 2)

A3 SBC PCB	A4 USB PCB
1. A3 Single Board Computer PCB Assembly – ND70061 – 3-59632 and 3-2000-1525. 2. A3 Back – There are four (4) configuration DIP switches on the back of A3 labeled SW4, SW5, SW6, and SW7. Leave them in the factory as-shipped configuration. The correct settings are defined in "Procedure and A3 DIP Switch Settings" on page 9-10 below.	3. A4 USB Controller PCB Assembly – ND70062 – 65412-4 – Mounted on A3 with two (2) pan head Phillips M2.5 × 6 mm screws. 4. USB A – Cable permanently attached to A4 and routes to Rear Panel and USB Type B Port for VNA control by an external USB Controller.

Figure 9-3. Phase 1 – A3 Single Board Computer and A4 USB Controller PCB Assemblies (2 of 2)

Procedure and A3 DIP Switch Settings

1. As described in the section above, remove the A3 Single Board Computer (SBC) PCB Assembly from the chassis.
2. Remove the A4 USB Controller PCB Assembly from the A3 SBC PCB by removing the two pan head Phillips screws holding it in place. At the Rear Panel, disconnect the USB cable from the Rear Panel Slave USB port. The USB cable is permanently attached to the A4 USB PCB.
3. Feed the cable through the slot in the A3 SBC PCB bracket.
4. Before starting the assembly and installation process, check the settings of the four (4) DIP switches on the back of the A3 SBC PCB (either the existing or replacement unit) and make sure they are set correctly as:
   - Up = ON
   - Down = OFF
   - SW 4 = ON, ON, OFF, ON
   - SW 5 = ON, ON, ON, ON
   - SW 6 = ON, ON, ON, OFF
   - SW 7 = ON, OFF, OFF, OFF
5. If a replacement A4 USB PCB is being installed, place the A4 USB PCB on the A3 SBC PCB, feed the USB cable through the slot, and fasten the A4 USB PCB in place with two (2) pan head Phillips screws.
6. If a replacement A3 SBC PCB is being installed, as above, install the A4 USB PCB on the A3 SBC PCB and fasten in place.
7. When ready, slide the A3 SBC PCB into its card cage slots until the latches click. Fasten it in place using the two (2) captive screws.
8. To install all of the top side digital PCBs, see Section 9-12 "Location of Right Side Analog Module Assemblies" on page 9-26 below.

9-6 Replace the A6 Adapter, A7 Graphics, and A8 GPIB PCBs

Use this procedure to replace the A6 cPCI-PMC Adapter Card PCB Assembly – ND70063 and/or its two daughter-board PCB assemblies:

- A7 Graphics Adapter PCB Assembly – ND70064 – 3-2000-1517
- A8 GPIB Module PCB Assembly – ND70065 – 65413-3

Note	There are two DIP switch banks (SW1 and SW2) on the back side of the A6 PCB that are set at the factory during configuration and calibration. Do not change the settings of these switches. The correct settings are defined in "Procedure and A3 DIP Switch Settings" on page 9-10 and in "A6, A7, and A8 PCB Procedure and A7 DIP Switch Settings" on page 9-14.

Identification – A6 and A7 PCBs

See Figure 9-4 below for PCB identification and DIP Switch location.

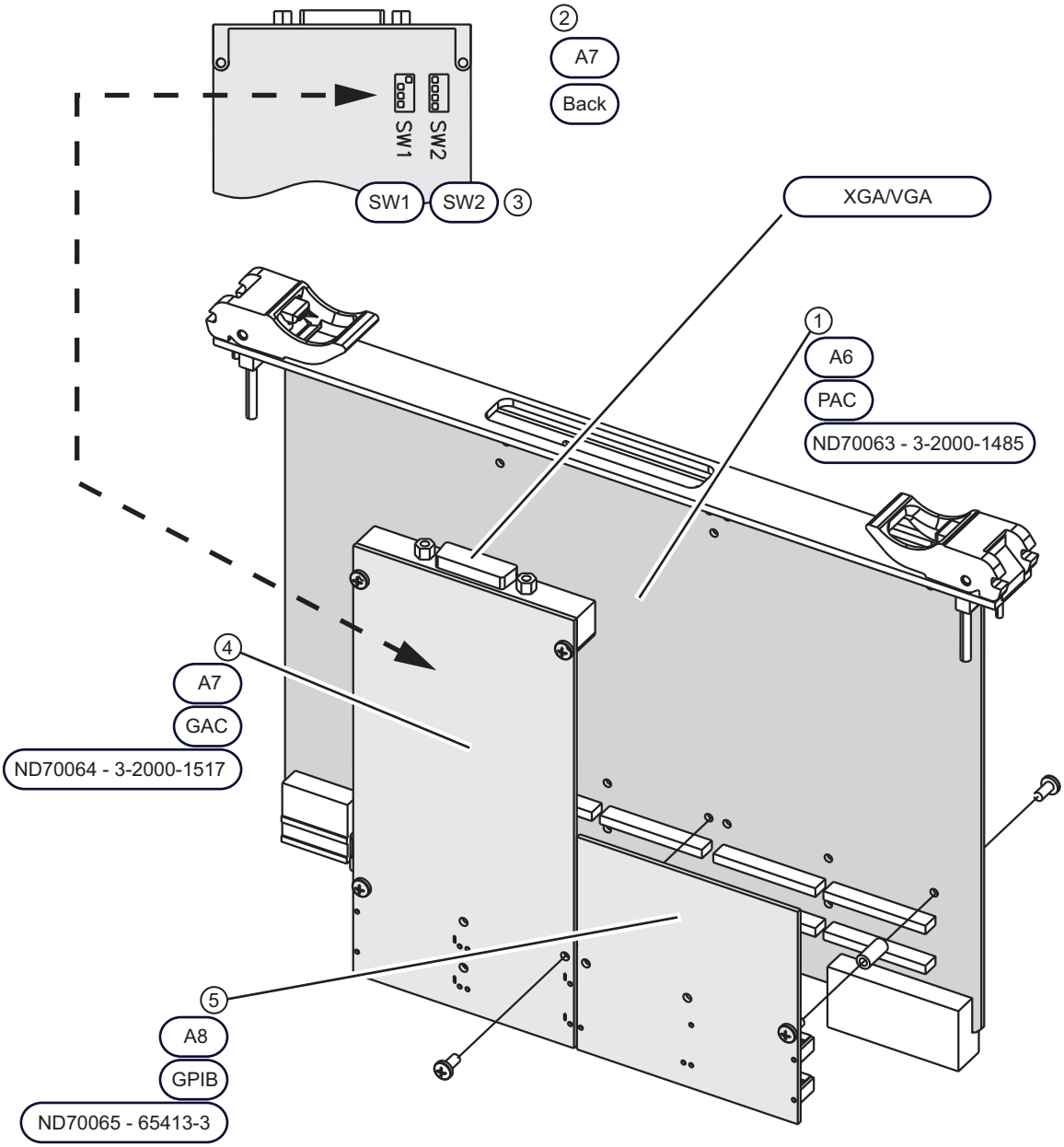

Figure 9-4. Phase 1 – A6 cPCI-PMC Adapter, A7 Graphics Adapter, and A8 GPIB Module PCBs (1 of 2)

PCBs	DIP Switches
1. A6 cPCI-PMC Adapter Card PCB Assembly (PAC) – ND70063 – 3-2000-1485 2. A7 Graphics Adapter Card PCB Assembly (GAC) – ND70064 – 3-2000-1517 – Mounted on the A6 PCB with two (2) pan head Phillips M2.5 x 6 mm screws. 3. A8 – GPIB Module PCB Assembly – ND70065 – 65413-3 – Mounted on A6 with two (2) pan head Phillips M2.5 x 6 mm screws.	4. A7 Back – There are two (2) configuration DIP switches on the back of A7 PCB labeled SW1 and SW2. Leave them in the factory as-shipped configuration. The correct settings are defined in "A6, A7, and A8 PCB Procedure and A7 DIP Switch Settings" on page 9-14 below. **Cables** 5. XGA/VGA – XGA/VGA DB-25 Connector on upper end of A7. The mating cable is permanently attached to the Rear Panel XGA/VGA DB-15 Port.

Figure 9-4. Phase 1 – A6 cPCI-PMC Adapter, A7 Graphics Adapter, and A8 GPIB Module PCBs (2 of 2)

A6, A7, and A8 PCB Procedure and A7 DIP Switch Settings

1. As described in the section above, remove the A6 cPCI-PMC Adapter Card PCB Assembly from the chassis.
2. Depending on the replacement requirements, remove one or both of the two daughter PCBs from the A6 PCB. Both the A7 and A8 PCBs are held in place with two (2) pan head Phillips screws.
3. Replace one or more of the PCBs as required.
4. Before starting the assembly and installation process, check the settings of the two (2) DIP switches on the back of the A7 Graphics Adapter PCB Assembly (either the existing or replacement unit) and make sure they are set correctly as:
   - Up = ON
   - Down = OFF
   - SW 1 = ON, OFF, OFF, OFF
   - SW 2 = OFF, OFF, OFF, OFF
5. When ready, install each daughter PCB into the A6 by fastening it in place with two (2) pan head Phillips screws.
6. When ready, slide the A7 PCB into its card cage slots until the latches click. Fasten it in place using the two (2) captive screws.
7. To install all of the top side digital PCBs, see Section 9-12 “Location of Right Side Analog Module Assemblies” on page 9-26 below.

9-7 Install the Phase 1 Top Side Digital PCBs

Use this procedure to install one or more of the Phase 1 top side digital PCBs after either servicing the PCB or accessing a deeper dwelling component.

Parts and Applicability

- A10 Digital Signal Processing Module PCB Assembly – ND70066 – 61933-3
  - Used in all Phase 1 and Phase 2 MS4640A Series VNAs.
- A3 Single Board Computer PCB Assembly – ND70061 – 3-2000-1525 and 3-59632
- A4 USB Controller PCB Assembly – ND70062 – 65412-4
  - This PCB is mounted as a daughter board on the A3 PCB.
- A6 cPCI-PMC Adapter Card PCB Assembly – ND70063 – 3-2000-1485
- A7 Graphic Adapter PCB Assembly – ND70064 – 3-2000-1517
  - This PCB is mounted as a daughter board on the A6 PCB.
- A8 GPIB Module PCB Assembly – ND70065 – 3-2000-1485
  - This PCB is mounted as a daughter board on the A6 PCB.

Identification

- Figure 9-3, “Phase 1 – A3 Single Board Computer and A4 USB Controller PCB Assemblies” on page 9-9
- Figure 9-4, “Phase 1 – A6 cPCI-PMC Adapter, A7 Graphics Adapter, and A8 GPIB Module PCBs” on page 9-12

Procedure

Prerequisites

1. For Phase 1 Digital PCBs, it is assumed that:
   - The A4 USB Controller PCB – ND70062 is already mounted on the A3 SBC PCB.
   - The A7 Graphic Adapter – ND70064, and the A8 GPIB Module – ND70065 are both mounted on the A6 cPCI-PMC Adapter Card.
2. If a single PCB assembly was removed, install it using the appropriate procedure step below.
3. If all PCBs were removed, install them in the sequence below.
4. Install the A10 DSP Module – ND70066 by sliding in into its card cage slot, and pressing it into place until the latches click into place. Use a screwdriver to fasten it into place.

Install the Phase 1 PCBs

5. Install the A6 cPCI-PMC Adapter Card – ND70063 as described above.
6. Install the A3 SBC PCB – ND as described above.

Connect Phase 1 Cables

7. Connect the XGA/VGA cable from the Rear Panel to the A7 Graphics Adapter PCB Assembly.
8. Connect the USB cable from the A4 USB Controller PCB Assembly to its connector on the Rear Panel.

Completion Common Procedures

9. If removed, install the Front Panel.
   - See Section 10-6 “Install the Phase 1 Front Panel Assembly” on page 10-19.
10. Install the Inner Top Cover.
    - See Section 7-7 “Common - Install Inner Cover” on page 7-15.
11. Install the Outer Cover. See Section 7-8 “Common - Install Outer Cover” on page 7-16.

9-8 Replace the Phase 2 Carrier PCB and Daughter-Boards

Use this procedure to remove the Carrier (CB) PCB Assembly – ND73874 – 3-72444-3 and then disassemble it to replace either the CB PCB or one of its daughter-board assemblies. The CB PCB and its daughter-boards are used on any model Phase 2 VNA with any combination of options.

Parts and Applicability

- Carrier Board PCB (CB PCB) Assembly – ND73874 – 3-72444-3
  - The CB PCB front-side daughter boards are: SBC, SODIMM (2 each), PMC-USB, and A8 GPIB PCBs.
  - The CB PCB back-side daughter board is the GPU PCB.
- Graphics Processor Unit (GPU PCB) PCB Assembly – ND73876 – 3-2000-1661
  - Includes heatsink
  - Mounts on back side of the CB PCB.
- A4 USB Controller PCB Assembly – ND70062 – 65412-4
  - Mounts on the front side of the CB PCB.
  - Also used in Phase 1 VNAs mounting on the front side of the A3 PCB.
- A8 GPIB Module PCB Assembly – ND70065 – 65413-3
  - Mounts on the front side of the CB PCB.
  - Also used in Phase 1 VNAs mounting on the front side of the A3 PCB.
- Single Board Computer (SBC PCB) – ND73875 – 3-2000-1668
  - Includes heatsink
  - Mounts on front side of the CB PCB.
- Small Outline Dual In-line Memory Module (SODIMM) – No ND – 3-2000-1671
  - Mounts on the front side of the SBC PCB.
  - Two (2) per instrument
  - One (1) per replacement kit

Identification – Carrier Board – Front Side Assemblies

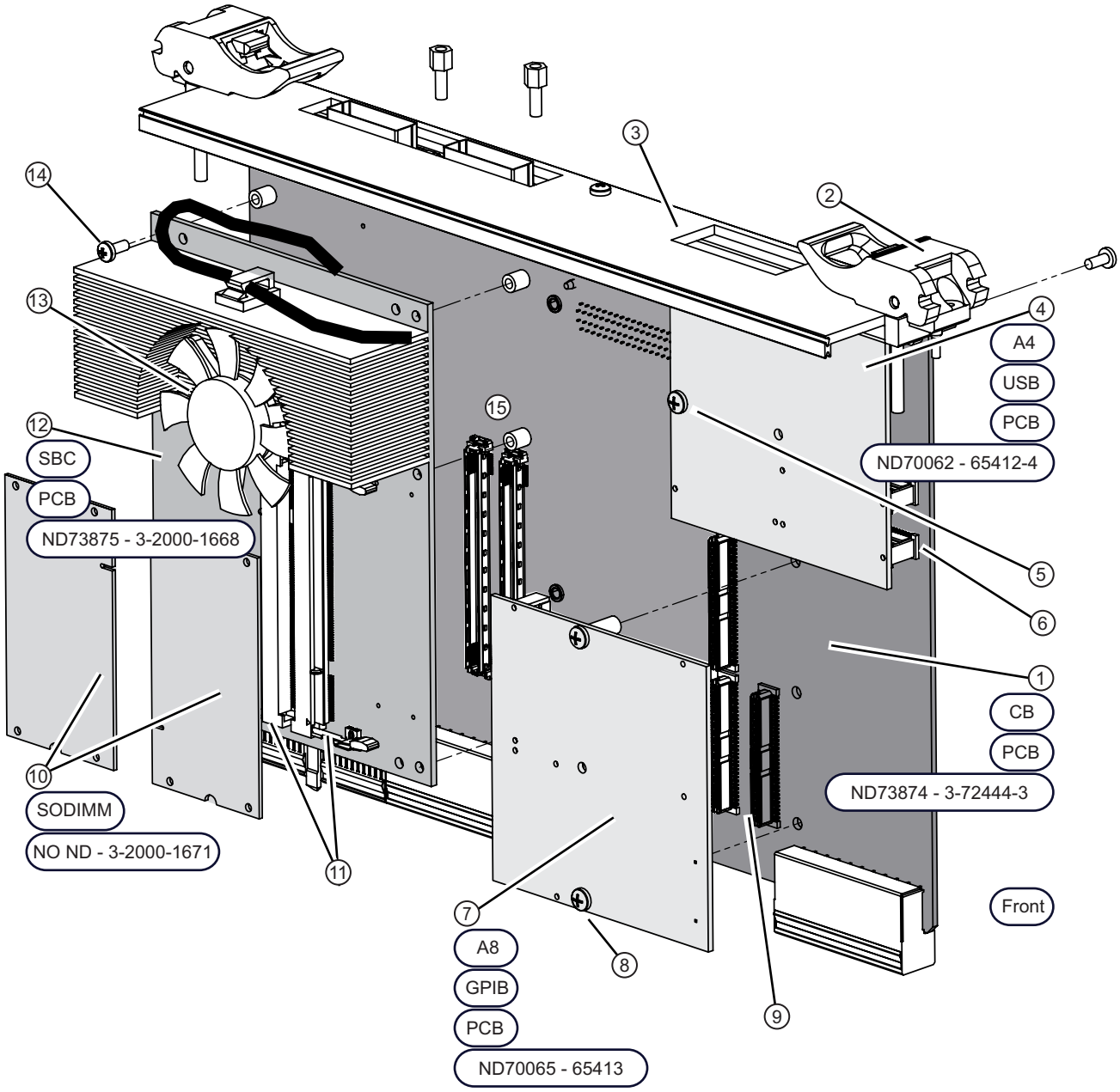

Figure 9-5. Phase 2 – Carrier Board PCB Assembly – ND73874 – 3-72444-3 – Front (1 of 2)

1. Carrier Board PCB (CB PCB) Assembly – ND73874 – 3-72444-3
2. CB PCB Ejector Handles
3. CB PCB Front Panel Connectors and LEDs
4. A4 USB Controller PCB Assembly – ND70062 – 65412-4
   - The A4 USB PCB is used in both Phase 1 and Phase 2 VNAs.
5. USB PCB mounting screws, 2 each
6. Connectors for USB PCB on CB PCB, 2 each
7. A8 GPIB PCB Assembly – ND70065 – 65413-3 – Mounts on the Carrier Board.
   - The A8 GPIB PCB is used in both Phase 1 and Phase 2 VNAs.
8. GPIB PCB mounting screws, 2 each
9. Connectors for PMC-USB PCB on CB-PCB, 3 each
10. Small Outline Dual In-line Memory Module (SODIMM) – No ND – 3-2000-1671
    - Two (2) SODIMMs per instrument
11. Connectors for SODIMMs on SBC PCB, one (1) per SODIMM, two (2) per SBC PCB
12. Single Board Computer (SBC) PCB Assembly – ND73875 – 3-2000-1668
13. SBC PCB heatsink, fan, and fan cable
14. SBC PCB mounting screws, 5 each
15. Connectors for SBC PCB on CB PCB, 2 each

Figure 9-5. Phase 2 – Carrier Board PCB Assembly – ND73874 – 3-72444-3 – Front (2 of 2)

Identification – Carrier Board – Back Side Assemblies

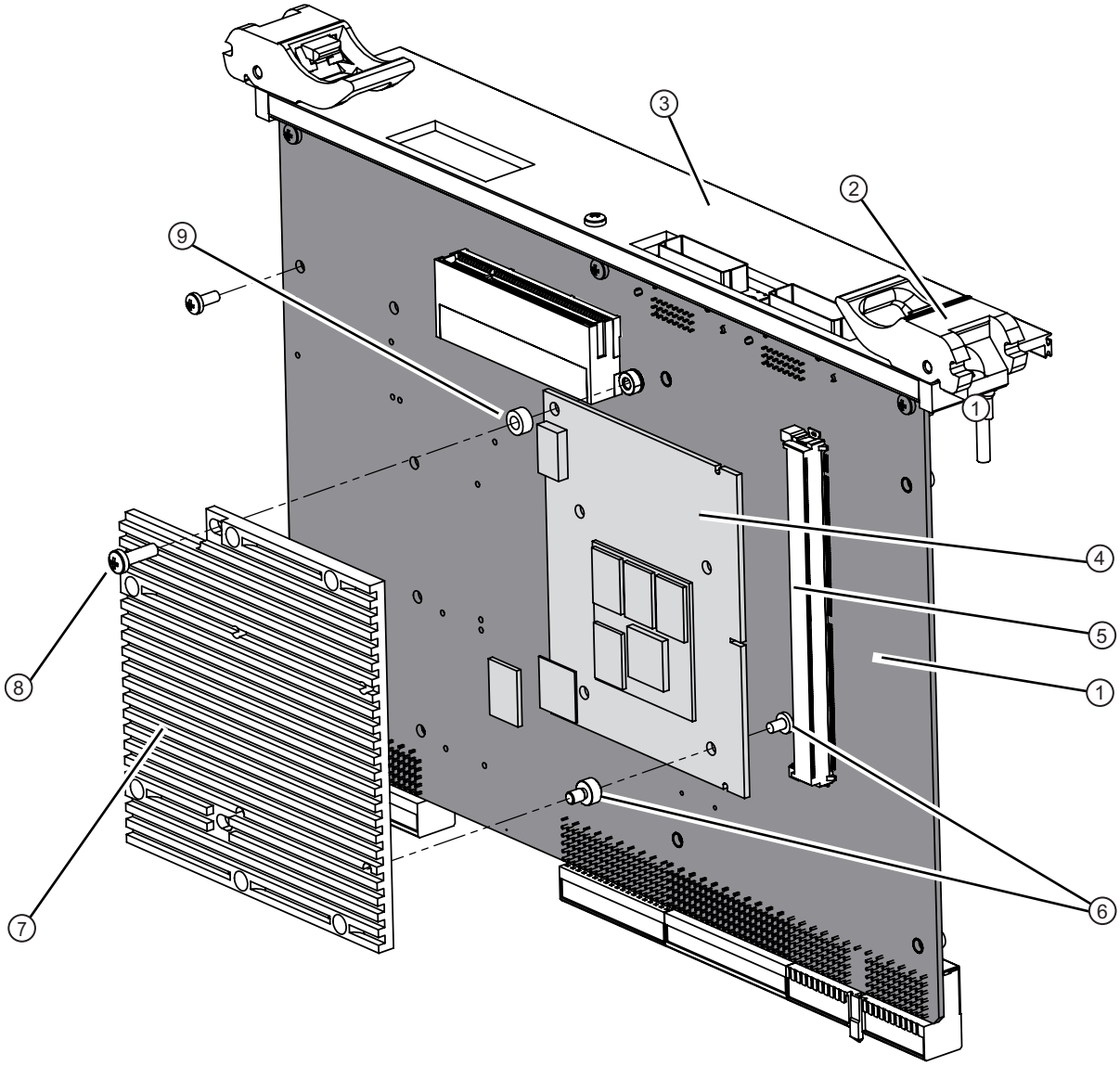

1. Carrier Board PCB (CB-PCB) Assembly – ND73874 – 3-72444-3	6. Heatsink mounting screws and standoffs, from back of GPU to threaded holes in heatsink, 4 each
2. CB-PCB Ejector Handles	7. GPU PCB Heatsink – 3-71973 • An included component of the GPU PCB replacement kit.
3. CB-PCB Front Panel Connectors and LEDs	8. Mounting screws holding Heatsink/GPU PCB assembly to CB-PCB, 2 each
4. Graphics Processor Unit (GPU) PCB – ND73876 – 3-2000-1661	9. Standoff washers between GPU PCB and Heatsink, 2 each
5. Connector for GPU PCB	

Figure 9-6. Phase 1 – Carrier Board PCB Assembly – ND73874 – 3-72444-3 – Back

9-9 Remove the Carrier Board Daughter-Boards

Use this procedure to either remove all Carrier Board (CB) PCB daughter-boards to replace the CB PCB, or remove individual daughter-boards for replacement. If all CB PCB daughter-boards are removed, it is assumed that the CB PCB is to be replaced.

Warning	The CB PCB must be handled carefully to avoid damaging the components on the front or back of the PBC. Of special note if the removal and replacement procedure to the Single Board Computer – ND73875 – 3-2000-1668.

Parts and Applicability

- Small Outline Dual In-line Memory Module (SODIMM) – No ND – 3-2000-1671
  - Mounts on the front side of the SBC PCB.
  - Two (2) per instrument
  - One (1) per replacement kit
- A4 USB Controller PCB Assembly – ND70062 – 65412-4
  - Mounts on the front side of the CB PCB.
  - Also used in Phase 1 VNAs mounting on the front side of the A3 PCB.
- A8 GPIB Module PCB (A8 GPIB PCB) Assembly – ND70065 – 65413-3
  - Mounts on the front side of the CB PCB.
  - Also used in Phase 1 VNAs mounting on the front side of the A3 PCB.
- Single Board Computer (SBC PCB) – ND73875 – 3-2000-1668
  - Includes heatsink
  - Mounts on front side of the CB PCB.
  - SODIMMs above must be remove first.
- Graphics Processor Unit (GPU PCB) PCB Assembly – ND73876 – 3-2000-1661
  - Includes heatsink
  - Mounts on back side of the CB PCB.
- Carrier Board PCB (CB PCB) Assembly – ND73874 – 3-72444-3

Identification

- Figure 9-5, “Phase 2 – Carrier Board PCB Assembly – ND73874 – 3-72444-3 – Front” on page 9-17
- Figure 9-6, “Phase 1 – Carrier Board PCB Assembly – ND73874 – 3-72444-3 – Back” on page 9-19

Removal and Replacement Procedure

1. Remove the Carrier Board PCB (CB PCB) Assembly – ND73874 – 3-72444-3 from the chassis as described above.
   - Section 9-3 “Remove Digital PCB Assemblies” on page 9-7
2. Avoid putting pressure on the Graphics Processor Module PCB Assembly (GPU PCB) on the back of the CB PCB.
3. Hold the CB PCB in a vertical position with one hand and use the other hand to remove the required daughter-board mounting screws as required using a Phillips-head screwdriver.
4. If replacing an individual daughter-board, go to that step, remove the PCB, install the replacement PCB, and then reinstall the Carrier Board PCB in the chassis.

5. If replacing the Carrier Board PCB, remove the daughter boards in sequence as described in this procedure. Then use Section 9-10 “Reassemble the Carrier Board PCB Assembly” on page 9-23 to reassemble the Carrier Board PCB.

Remove the GPU PCB

6. Note that the Graphics Processor Unit (GPU PCB) PCB Assembly – ND73876 – 3-2000-1661 is mounted on the Carrier Board PCB back side. Keep the Carrier Board vertically oriented while servicing the GPU PCB.
   - Figure 9-6, “Phase 1 – Carrier Board PCB Assembly – ND73874 – 3-72444-3 – Back” on page 9-19.
7. Partially remove the two (2) screws holding the PCB/Heatsink assembly onto the Carrier Board PCB. The goal is to disengage the screw threads from the Carrier Board PCB standoffs, but not loose the spacer standoffs between the heatsink and the GPU PCB.
   - Note that the PCB heatsink is part of the replacement PCB.
8. Lift the non-connector edge of the GPU PCB up 45 degrees and then remove from the Carrier Board PCB.
9. Be careful with the GPU PCB orientation so that the screw spacers are not lost or misaligned.
10. If replacing just the GPU PCB, the installation is the reverse.
11. If replacing the Carrier Board PCB, set the GPU PCB aside in a static-free environment and continue with the step below.
12. After the GPU PCB has been removed, the CB PCB can be placed flat on a table with a clean anti-static non-mar covering.

Remove the SODIMMs

13. The Small Outline Dual In-line Memory Modules (SODIMMs) – No ND – 3-2000-1671 do not have any fastening hardware and are mounted on the SBC PCB.
14. Lift the SODIMM connector latches out, disengaging from the module and then lift the front edge of the SODIMM up 45 degrees, and then remove from the SBC PCB.
15. If required, repeat for the second SODIMM.
16. If replacing just the SODIMM, installation is the reverse.
17. If replacing the CB PCB, set the SODIMMs aside in a static-free environment and continue with the step below.

Remove the A4 USB PCB

18. Remove the two (2) screws holding the A4 USB Controller PCB Assembly (A4 USB PCB) – ND70062 – 65412-4 onto the Carrier Board PCB.
19. Lift the A4 USB PCB straight up from its two (2) connectors on the CB PCB.
20. If replacing just the A4 USB PCB, installation is the reverse.
21. If replacing the CB PCB, set the A4 USB PCB aside in a static-free environment and continue with the step below.

Remove the A8 GPIB PCB

22. Remove the two (2) screws holding the A8 GPIB Module PCB Assembly (A8 GPIB PCB) – ND70065 – 65413-3 onto the CB PCB.
23. Lift the A8 GPIB PCB straight up from its three (3) connectors on the CB PCB.
24. If replacing just the A8 GPIB PCB, installation is the reverse.
25. If replacing the CB PCB, set the A8 GPIB PCB aside in a static-free environment and continue with the step below.

Remove the Single Board Computer

Note	If removing just the Single Board Computer PCB Assembly (SBC PCB) – ND73875 – 3-2000-1668 for replacement, the disassembly sequence is: 1. Remove the GPU PCB from the back side of the CB PCB. 2. Remove the two SODIMMs from the SBC. 3. Remove the SBC PCB.

26. The SODIMMs must be removed before the Single Board Computer (SBC PCB) – ND73875 – 3-2000-1668 can be removed.

- Do Step 13 through Step 17 above first.

27. Remove the seven (7) screws holding the SBC PCB in place on the CB PCB.

28. Using even lifting force, lift the SBC PCB straight up from its two (2) connectors on the Carrier Board PCB.

- Note that the PCB main heatsink and fan are part of the replacement part.
- The fan cable plugs into a socket on the back of the SBC PCB.

29. If replacing just the SBC PCB, use the procedure in Section 9-10 “Reassemble the Carrier Board PCB Assembly” on page 9-23 below to replace it.

Replace the Carrier Board PCB

- At this point, all daughter-board PCBs have been removed from the CB PCB.

30. Set the CB PCB aside.

9-10 Reassemble the Carrier Board PCB Assembly

Use this procedure to replace the Single Board Computer (SBC PCB) – ND73875 – 3-2000-1668 onto the Carrier Board PCB (CB PCB) Assembly – ND73874 – 3-72444-3 or if you are replacing the CB PCB.

Procedure

1. Be sure that the Graphics Processor Unit PBC (GPU PCB) Assembly – ND73876 – 3-2000-1661 and its heatsink have been removed from the back of the CB PCB.
2. If the GPB PCB has been removed, the CB PCB can be laid flat on a table for the SBC assembly below.
3. If the GPB PCB is still attached, the CB PCB must remain upright during the assembly procedure.

Install the SBC PCB

Note	If installing just the Single Board Computer PCB Assembly (SBC PCB) – ND73875 – 3-2000-1668, the reassembly sequence is: 1. Place the SBC PCB in position on the front side of the CB PCB and press the connectors into place. Fasten in place with seven (7) machine screws. 2. Replace the two SODIMMs on the SBC. 3. Keeping the CB PCB vertical, replace the GPU PCB on the back side of the CB PCB.

4. Make sure the heat sink fan cable is connected attached to its connector on the back of the SBC PCB.
5. Install the SBC PCB be aligning it with the two (2) connectors on the CB PCB.
6. Use firm pressure to press the SBC PCB into its connectors so they are fully seated taking care not to pinch the fan power cable.
7. Fasten in place with seven (7) machine screws.

Install the A8 GPIB PCB

8. Install the A8 GPIB Module PCB (A8 GPIB PCB) Assembly – ND70065 – 65413-3 on the front of the CB PCB.
9. Position the A8 GPIB PCB over its three (3) CB PCB connectors and press into place, making sure the connectors are fully seated.
10. Fasten in place with two (2)

Install the A4 USB PCB

11. Install the A4 USB Controller PCB (A4 USB PCB) Assembly – ND70062 – 65412-4 on the front of the CB PCB.
12. Position the A4 USB PCB over its two (2) CB PCB connectors and press into place, making sure the connectors are fully seated.
13. Fasten in place with two (2) machine screws.

Install the SODIMMs

14. Position the first Small Outline Dual In-line Memory Module (SODIMM) – No ND – 3-2000-1671 over its mounting connector on the SBC PCB.
15. Holding the SODIMM at a 45 degrees angle, insert the connector edge of the SODIMM into its connector on the SBC PCB.
16. Gently press the SODIMM flat until the connector tabs click into place. There are no mounting screws required for the SODIMMs.
17. Repeat the step above to the second SODIMM.

Install the GPU PCB

18. Position the CB PCB so that it is vertical. Do not lay the CB PCB flat on its heat sink side.

19. Install the Graphics Processor Unit (GPU PCB) PCB Assembly – ND73876 – 3-2000-1661 with its attached heatsink on the rear of the CB PCB.

- For orientation, Figure 9-6, “Phase 1 – Carrier Board PCB Assembly – ND73874 – 3-72444-3 – Back” on page 9-19.

20. Make sure the GPU PCB mounting screw spacers are correctly centered over their mounting holes.

21. Holding the GPU PCB at a 45 degree angle, insert the connector edge of the PCB into the connector.

22. Gently push the GPU PCB flat until the connector tabs click into place.

23. Making sure the spacers between the heatsink and the PCB are still correctly aligned and in place, insert and tighten the two (2) machine screws to hold the GPU PCB in place.

24. The CB PCB is ready to install in the instrument chassis.

9-11 Install the Phase 2 Carrier Board PCB – ND73874 – 3-72444-3

Use this procedure to install the Carrier Board PCB Assembly (CB PCB) – ND73874 – 3-72444-3 into the instrument chassis after replacing one or more digital PCBs or removing the assembly to access deeper dwelling assemblies.

Procedure

1. Check that all the connections and mounting hardware on the CB PCB are correct and tight.
2. Make sure the Single Board Computer Heatsink Fan has been connected to its connector on the back side of the SBC PCB.
3. Slide the CB PCB into the chassis, making sure to clear both the Power Supply Module on the left (when viewed from the front) and the A10 Digital Signal Processor PCB on the right.
4. Connect the cable between the CB PCB J23 XGA/VGA connector and the rear panel XGA/VGA connector.

Completion Common Procedures

5. If removed, install the Front Panel.
   - See Section 10-6 “Install the Phase 1 Front Panel Assembly” on page 10-19.
6. Install the Inner Top Cover.
   - See Section 7-7 “Common - Install Inner Cover” on page 7-15.
7. Install the Outer Cover.
   - See Section 7-8 “Common - Install Outer Cover” on page 7-16.

9-12 Location of Right Side Analog Module Assemblies

This section describes the following analog module assemblies which are PCB-like in configuration:

- A11 IF Band Module – ND70076 – 62080
- A13 Source Module – ND70077 – 62082 or ND73202 – 62082-1
- A15 Low Band Receiver Module – ND70075 – 62079

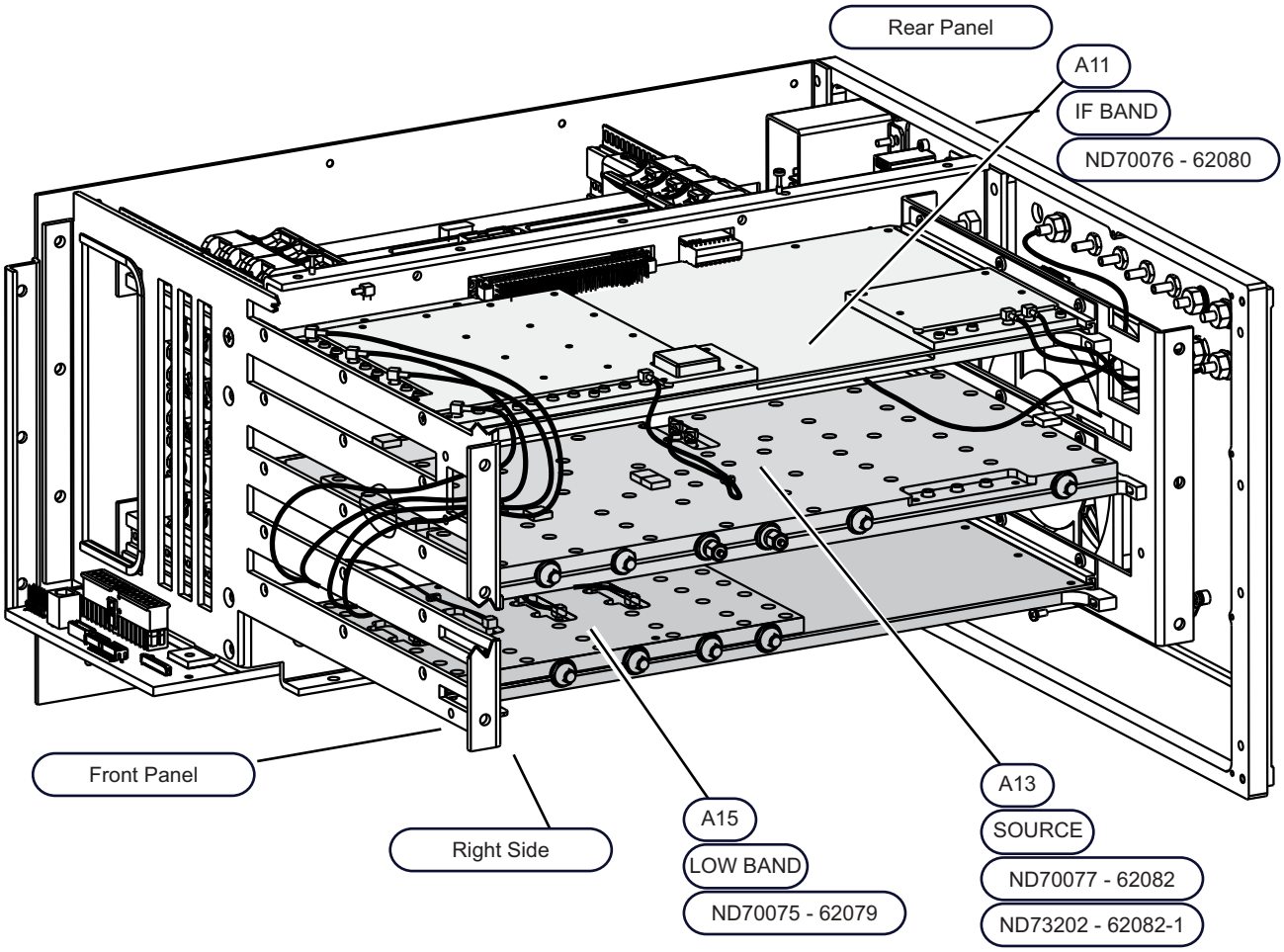

Orientation	Analog Modules
• Right Side – Side panel and some cables removed for clarity. • Rear Panel – Rear Panel towards right. • Front Panel – Towards left, removed for clarity.	• A11 – IF Band Module – ND70076 – 62080 • A13 – Source Module – ND70077 – 62082 or ND73202 – 62082-1 • A15 – Low Band Receiver Module – ND70075 – 62079

Figure 9-7. A11 IF Band, A13 Source, and A15 Low Band Receiver Module PCB Assemblies

9-13 Remove Right Side Analog Modules

Use this procedure to remove the right side analog section PCB-like module assemblies. After removal, follow up procedures may be to replace an analog module assembly, access other chassis-mounted components, or access RF Deck hardware, components, and cables.

Note	The Motherboard 1 PCB Assembly (MB1 PCB) – ND70069 – 61920-3 is mounted vertically in the digital section PCB bay and provides the backplane connectors for the analog module PCB-like assemblies. The MB1 PCB backplane connectors protrude through the chassis center plate into the analog section PCB bay. The MB1 PCB plugs into a backplane connector on either the Phase 1 Motherboard 2 PCB Assembly (MB2 PCB) – ND70070 – 61923-3 or the Phase 2 MB2 PCB ND73878 – 3-72813-2. The MB2 PCB is mounted horizontally below both PCB bays and above the RF Deck assembly. The motherboards do not have an engineering reference “A” number.

Parts and Applicability

- A11 IF Band Module – ND70076 – 62080 – Upper module.
- A13 Source Module – ND70077 – 62082 or ND73202 – 62082-1 – Middle module.
- A15 Low Band Receiver Module – ND70075 – 62079 – Lower module.
- The right side analog module assemblies are used in all instrument models with any combination of options.

Identification

The three figures below (Figure 9-8, Figure 9-9 on page 9-29, and Figure 9-10 on page 9-30) describe each analog module assembly and show their connector locations. The call outs in each figure summarize the MCX and semi-rigid coaxial cable connections for each PCB.

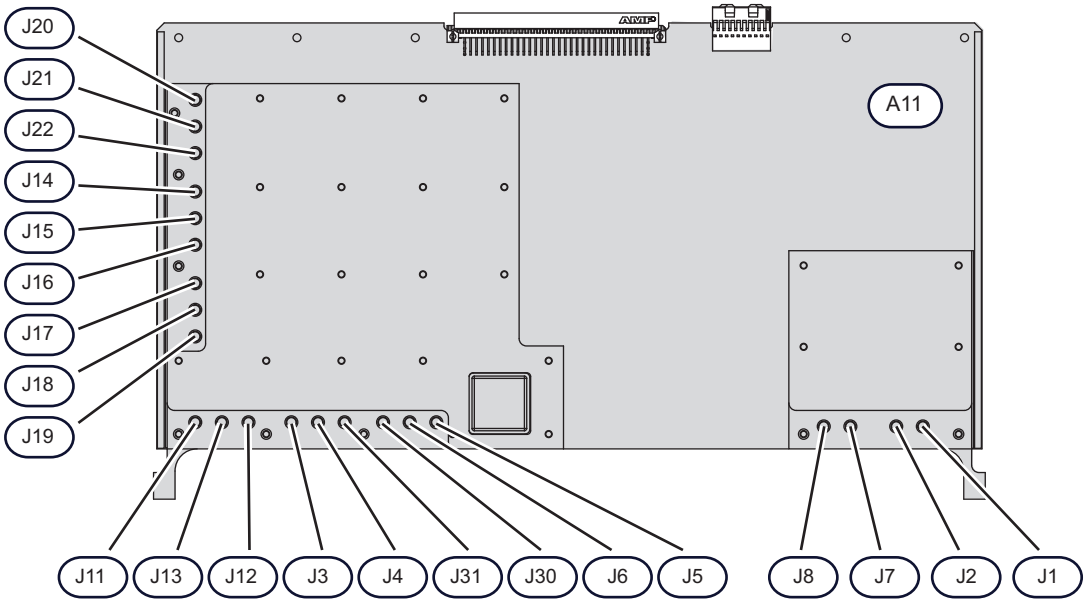

Figure 9-8. A11 IF Band Module – ND70076 – 62080 – Connectors (1 of 2)

All A11 module cable connectors are MCX.

Left Side Connectors (top to bottom)

1. J20 – B2 LO IF – Low Band b2 IF In. Connects to bottom A15 module J22.
2. J21 – B2 HI IF – High Band b2 IF In. Connects to the A102 Sampler Module rear facing J3. Note that the A100, A101, A102, A103, and A130 modules are located on the RF Deck Top Side and are part of the Sampler/LO Distribution Module Assembly.
3. J22 – B2 I/O – b2 IF In/Out. Connects to rear panel IF I/O b2.
4. J14 – B1 LO IF – Low Band b1 IF In. Connects to bottom A15 module J16.
5. J15 – B1 HI IF – High Band b1 IF In. Connects to A100 Sampler Module rear facing J3.
6. J16 – B1 I/O – b1 IF In/Out. Connects to rear panel IF I/O b1.
7. J17 – A2 LO IF – Low Band a2 IF In. Connects to bottom A15 module J20.
8. J18 – A2 HI IF – High Band a2 IF In. Connects to A103 Sampler Module rear facing J3.
9. J19 – A2 I/O – a2 IF In/Out. Connects to rear panel IF I/O a2.

Bottom Left Connectors (left to right)

10. J11 – A1 LO IF – Low Band a1 IF In. Connects to bottom A15 module J13.
11. J13 – A1 I/O – a1 IF In/Out. Connects to rear panel IF I/O a1.
12. J12 – A1 HI IF – High Band a1 IF In. Connects to the A101 Sampler Module rear facing J3.
13. J3 – EXT 10M IN – External 10 MHz Reference In. Connects to rear panel External 10 MHz Input.
14. J4 – EXT 10M OUT – External 10 MHz Reference Out. Connects to rear panel External 10 MHz Output.
15. J31 – REF 2 – 10 MHz Reference Out. Not used.
16. J30 – REF 1 – 10 MHz Reference Out. Not used.
17. J6 – REF S2 – 10 MHz Reference Out. Not used.
18. J5 – REF S1 – 10 MHz Reference Out. Connects to middle A13 module connector J10.

Bottom Right Connectors (left to right)

19. J8 – External A/D Clock Out. Not used.
20. J7 – External A/D Clock In. Not used.
21. J2 – External Analog In 2. Connects to rear panel External Analog Input 2.
22. J1 – External Analog In 1. Connects to rear panel External Analog Input 1.

Figure 9-8. A11 IF Band Module – ND70076 – 62080 – Connectors (2 of 2)

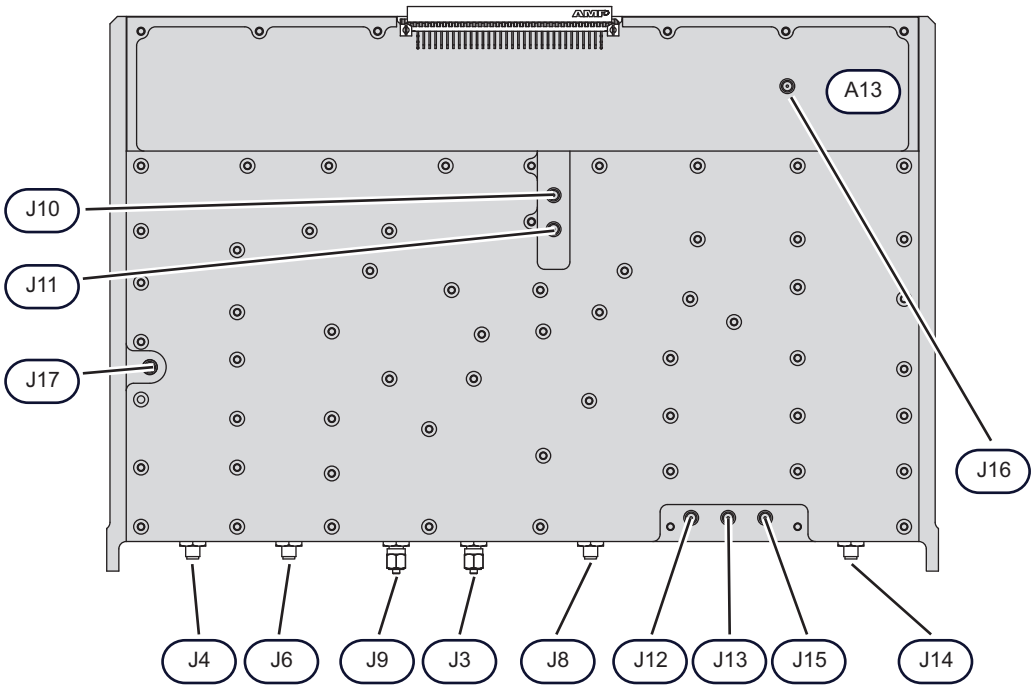

Left Side Connectors

1. J17 – HB LO ALC Input – Connects to A130 LO Coupler Module and its forward facing J3/J4 pins (on RF Deck Top Side Center).
2. Center Connectors (top to bottom)
3. J10 – 10 MHz Reference Input – Connects to top A11 module J5.
4. J11 – VCXO Clock Output – Not used.

Right Side Connector

5. J16 – External Analog Output – Connects to rear panel External Analog Output.

Bottom Connectors (left to right)

6. J4 – Highband LO1 Output – Connects to A111 LO Distribution Module right facing J1 on RF Deck Top Side.
7. J6 – Low band LO1 Output – Connects to bottom A15 module J11.

Bottom Connectors (continued)

8. J9 – Common Het Output – Terminator installed, no cable.
9. J3 – Common Offset Output – Terminator installed, no cable.
10. J8 – Low band Source Output – Connects to A115 Low Band Transfer Switch Module J1 on RF Deck Top Side.
11. J12 – HB Src ALC Input – Connects to A18 PCB J7 on RF Deck Bottom Side.
12. J13 – External ALC Input – Only used with Option 080/081 only. Connects to Rear Panel External ALC connector.
13. J15 – SQM Modulator Drive Output – Only used on MS4645A / MS4647A VNAs. Connects to A18 PCB J12.
14. J14 – Highband Source Output – Connects to A113 5-20 GHz Doubler Module J1 on RF Deck Top Side.

Figure 9-9. A13 Source Module – ND70077 – 62082 or ND73202 – 62082-1 – Connectors

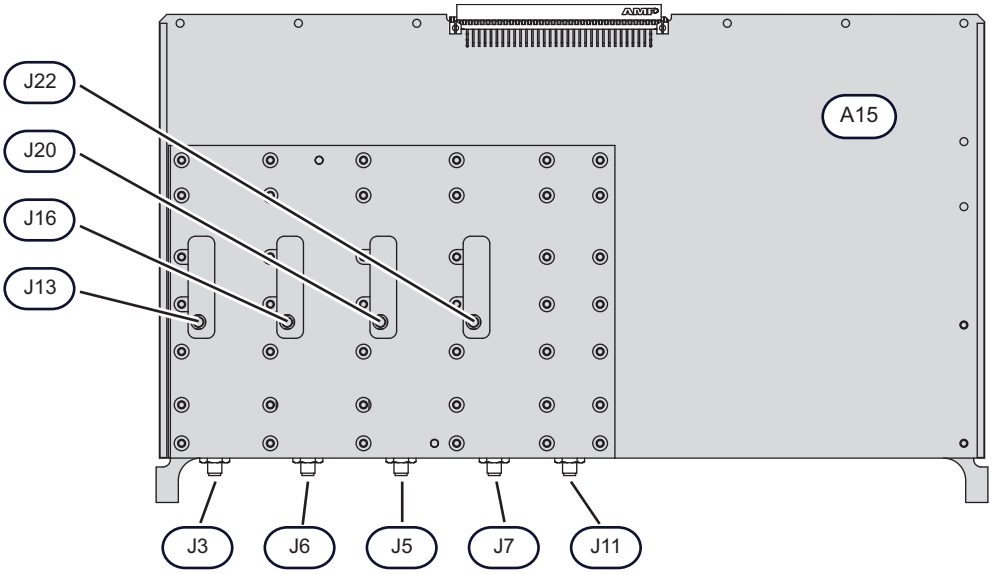

Center Connectors (left to right)	Bottom Connectors (left to right)
1. J13 – Connects to top A11 module J11.	5. J3 – Connects to rear panel.
2. J16 – Connects to top A11 module J14.	6. J6 – Connects to rear panel.
3. J20 – Connects to top A11 module J17.	7. J5 – Connects to rear panel.
4. J22 – Connects to top A11 module J20.	8. J7 – Connects to rear panel.
	9. J11 – Connects to middle A13 module connector J6.

Figure 9-10. A15 Low Band Receiver Module – ND70075 – 62079 – Connectors

Procedure

Common Procedures

1. Prepare work area, work surface, and observe safety issues.

- See Section 7-4 “Common - Prepare Work Area and Safety” on page 7-9.

2. Remove Outer Cover.

- See Section 7-5 “Common - Remove Outer Cover” on page 7-10.

3. Position the instrument so that it is right-side up, RF deck down.

4. Remove Inner Top Cover.

- See Section 7-6 “Common - Remove Inner Cover” on page 7-13.

Remove A11 (Upper) Module

5. This is the upper right side analog module.

6. Disconnect the attached MCX and semi-rigid coaxial cables as listed in Figure 9-8 on page 9-27 above.

7. Remove the two (2) outer screws holding the module into its card guide.

8. Pull out the A11 module and set aside.

Remove A13 (Middle) Module

9. This is the middle analog module assembly.

10. Disconnect the attached MCX and semi-rigid coaxial cables as listed in Figure 9-9 on page 9-29 above.

11. Remove the two (2) outer screws holding the module into its card guide.
12. Pull out the A13 module and set aside.

Remove A15 (Lower) Module

13. This is the lower analog module assembly.
14. Disconnect the attached MCX and semi-rigid coaxial cables as listed in Figure 9-10 on page 9-30 above.
15. Remove the two (2) outer screws holding the module into its card guide.
16. Pull out the A15 module of its backplane connector, and set aside.

9-14 Prepare Right Side Analog Modules

There are no preparation procedures required for the A11, A13, or A15 analog module assemblies.

9-15 Install the Right Side Analog Modules

Use these procedures to install one or more of the removed right side analog modules, either after replacing a unit, or removing them to provide access for a deeper dwelling component. In general, the analog modules are installed in the reverse order of their removal, working from the bottom (closest to the RF Deck) to the top.

Parts and Applicability

- A15 Low Band Receiver Module – ND70075 – 62079 – Lower module.
- A13 Source Module – ND70077 – 62082 or ND73202 – 62082-1 – Middle module.
- A11 IF Band Module – ND70076 – 62080 – Upper module.
- These modules are used by all instrument models with any combination of options.

Procedure

Prerequisites

1. The right side analog modules have been unseated from the Motherboard 1 (MB1) PCB Assembly backplane connectors and removed from the chassis.
2. Their coaxial cables are in place in the instrument chassis and must be connected.

Install the A15 Low Band Receiver Module

3. This is the lowest analog module.
4. Press the A15 module into its backplane connector on the MB1 PCB Assembly.
5. Insert two (2) screws to hold the module in place and then tighten.
6. Connect the MCX and semi-rigid coaxial cables as listed in Figure 9-10, “A15 Low Band Receiver Module – ND70075 – 62079 – Connectors” on page 9-30 above.

Install the A13 Source Module

7. This is the middle analog module.
8. Press the A13 module into its backplane connector on the MB1 PCB.
9. Insert two (2) screws to hold the module in place and then tighten.
10. Connect the MCX and semi-rigid coaxial cables as listed in Figure 9-9, “A13 Source Module – ND70077 – 62082 or ND73202 – 62082-1 – Connectors” on page 9-29 above.

Install the A11 IF Band Module

11. This is the upper analog module.

12. Press the A11 module into its backplane connector on the MB1 PCB.
13. Insert two (2) screws to hold the module in place and then tighten.
14. Connect the MCX and semi-rigid coaxial cables as listed in Figure 9-8, “A11 IF Band Module – ND70076 – 62080 – Connectors” on page 9-27 above.

Common Completion Procedures

15. If removed, install the Front Panel.
    - See Section 10-6 “Install the Phase 1 Front Panel Assembly” on page 10-19.
16. Install the Inner Top Cover.
    - See Section 7-7 “Common - Install Inner Cover” on page 7-15.
17. Install the Outer Cover.
    - See Section 7-8 “Common - Install Outer Cover” on page 7-16.

Calibration and Adjustment

18. If any of the analog modules were replaced, refer to both of the chapters below for completion calibration procedures:
    - Chapter 3, “Performance Verification”
    - Chapter 5, “Adjustment Procedures”

Chapter 10 — Front Panel Assembly

10-1 Introduction

Use this procedure to remove the original front panel, and if necessary, exchange it with a replacement unit. Note that separate removal and installation procedures are used for Phase 1 and Phase 2 Front Panel Assemblies due to cabling differences. The following procedures are described:

- Remove, Prepare, and Install the Phase 1 Front Panel Assembly
  - Section 10-3 “Remove the Phase 1 Front Panel Assembly” on page 10-3
  - Section 10-5 “Prepare the Replacement Front Panel Assembly” on page 10-16
  - Section 10-6 “Install the Phase 1 Front Panel Assembly” on page 10-19
- Remove, Prepare, and Install the Phase 2 Front Panel Assembly
  - Section 10-4 “Remove the Phase 2 Front Panel Assembly” on page 10-11
  - Section 10-5 “Prepare the Replacement Front Panel Assembly” on page 10-16
  - Section 10-7 “Install the Phase 2 Front Panel Assembly” on page 10-21

10-2 Access for Other Components

The removal procedures above are also used to provide access for other replacement parts covered in the chapters and sections listed below:

- Chapter 14, “RF Deck Removal and Installation”
  - Section 14-3 “Remove the RF Deck” on page 14-4
  - Section 14-4 “Install the RF Deck” on page 14-12
- Chapter 16, “Rear Panel Components”
  - Section 16-3 “Remove the Rear Panel Assembly” on page 16-2
  - Section 16-10 “Installing the Rear Panel Assembly” on page 16-22
  - Rear Panel PCB
    - Section 16-4 “Remove the A17 Rear Panel PCB Assembly” on page 16-15
    - Section 16-5 “Prepare the Replacement A17 Rear Panel PCB Assembly” on page 16-17
    - Section 16-6 “Install the A17 Rear Panel PCB Assembly” on page 16-17
  - Rear Panel (Analog) Fan Assembly
    - Section 16-7 “Remove the Rear Panel Fan Assembly” on page 16-19
    - Section 16-8 “Preparing the Replacement Rear Panel Fan” on page 16-20
    - Section 16-9 “Install the Rear Panel Fan Assembly” on page 16-21
  - Digital PCB Fan Assembly
    - Section 18-2 “Remove the Digital PCB Fan Bracket/Card Guide Assembly” on page 18-2.
    - Section 18-3 “Prepare the Replacement Digital PCB Fan Assembly” on page 18-18.
    - Section 18-4 “Install the Digital Fan Bracket Card Guide Assembly” on page 18-23.
- Chapter 15, “RF Deck Top Side Modules”
  - A113 Module
    - Section 15-3 “Replace the A113 5-20 GHz Doubler Module” on page 15-5
  - A115 Module
    - Section 15-4 “Replace the A115 Low Band Transfer Switch Module” on page 15-9

- A116/A117 Modules
  - Section 15-5 “Replace the A116/A117 Low Band Bridge Module” on page 15-12
- Sampler/LO Distribution Module PCB Assembly
  - Section 15-10 “Remove the Sampler/LO Distribution Module Assembly” on page 15-41
  - Section 15-17 “Install the SLODM onto the RF Deck” on page 15-66

- Chapter 17, “Power Supply Module”
  - Section 17-3 “Remove the Power Supply Module” on page 17-12
  - Section 17-5 “Install the Power Supply Module” on page 17-17
- Chapter 19, “MB1 and MB2 PCB Replacement Procedures”
  - Motherboard 2 PCB Assembly
    - Section 19-4 “Remove the Motherboard 2 PCB Assembly” on page 19-12
    - Section 19-5 “Prepare the Replacement Motherboard 2 PCB Assembly” on page 19-14
    - Section 19-6 “Install the Motherboard 2 PCB Assembly” on page 19-14
  - Motherboard 1 PCB Assembly
    - Section 19-8 “Remove the MB1 PCB Assembly – ND70069 – 61920-3” on page 19-18
    - Section 19-9 “Prepare the Replacement Motherboard 1 PCB Assembly” on page 19-20
    - Section 19-10 “Install the Motherboard 1 PCB Assembly” on page 19-20

10-3 Remove the Phase 1 Front Panel Assembly

The external Front Panel user controls are identical on all Phase VNAs. The removal and replacement procedure changes depending on whether the Front Panel cables are permanently attached or can be removed.

Use this procedure to remove the Front Panel Assembly to either replace it or to provide access to other deeper dwelling components. Phase 1 Front Panels have two (2) permanently attached cables. To remove a Phase 2 Front Panel Assembly with three (3) removable cables, see Section 10-4 “Remove the Phase 2 Front Panel Assembly” on page 10-11 below.

Parts and Applicability

- Phase 1 – MS4640A Front Panel Assembly – ND70060 – 62078
  - For VNAs with S/N 1106189 and lower.
  - There are no user serviceable parts inside the Front Panel.
  - Phase 1 Front Panels come with two (2) permanently attached ribbon cables.
  - Phase 1 Front Panels do not come with the Model Identity Label – 3-60124-XX which must be ordered separately.
  - Phase 1 Front Panels can only be used with the Phase 1 Motherboard 2 PCB Assembly – ND70070 – 61923-3.
  - Phase 1 Front Panels can only be used with the Phase 1 Power Supply Module – ND70072 – 62088 with Power Cable Harness 3-72058.
- Phase 1 – MS4640A Front Panel Assembly – ND73194 – 73257
  - For VNAs with S/N 1106190 up to and including S/N 1132241.
  - Requirements as above.

Note	If replacing the Front Panel Assembly, the instrument **Model Identity Label** must be ordered separately and can be applied at the end of the Front Panel installation procedure. The label part number varies depending on the instrument model. Each label is valid for any combination of options for that model: • MS4642A Model Identity Label – No ND – 3-60124-9 • MS4644A Model Identity Label – No ND – 3-60124-10 • MS4645A Model Identity Label – No ND – 3-60124-13 • MS4647A Model Identity Label – No ND – 3-60124-11 For replacement instructions, see Section 10-6 “Install the Phase 1 Front Panel Assembly” on page 10-19.

Procedure

1. Prepare work area, work surface, and observe safety issues.
   - See Section 7-4 “Common - Prepare Work Area and Safety” on page 7-9.
2. Remove Outer Cover.
   - See Section 7-5 “Common - Remove Outer Cover” on page 7-10.
3. Remove Inner Cover.
   - See Section 7-6 “Common - Remove Inner Cover” on page 7-13.
4. Position the instrument so that it is right-side up, RF deck down.
5. Add a spacer at least 5 cm (~2”) thick under the front of the unit, approximately 10 cm (~4”) in from the instrument front as shown in Figure 10-1 and Figure 10-2 below.
   - The spacer should be at least 50 mm (~20”) long.
   - The spacer creates clearance for the Front Panel Loops located on the RF Deck.

- A ~50 cm (~20”) length of lumber “2 by 2” provides a perfect spacer.

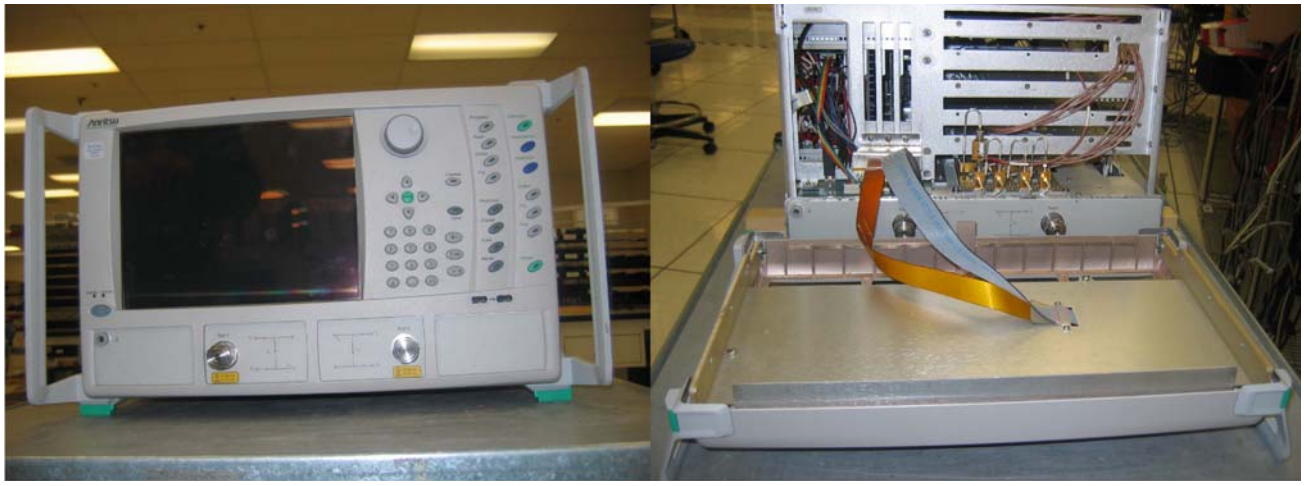

Front Panel attached at left. At right, note the two ribbon cables connecting the Phase 1 Front Panel to the instrument Phase 1 Motherboard 2 PCB assembly and its P61 (left) and P62 (right) connectors.	While the cables are attached to the chassis, the Front Panel and the chassis must be kept center-aligned within 2.5 cm (~1”), and separated by no more than 5 cm (~2”). Both cables are permanently attached to the Front Panel assembly.

Figure 10-1. Phase 1 Front Panel Assembly

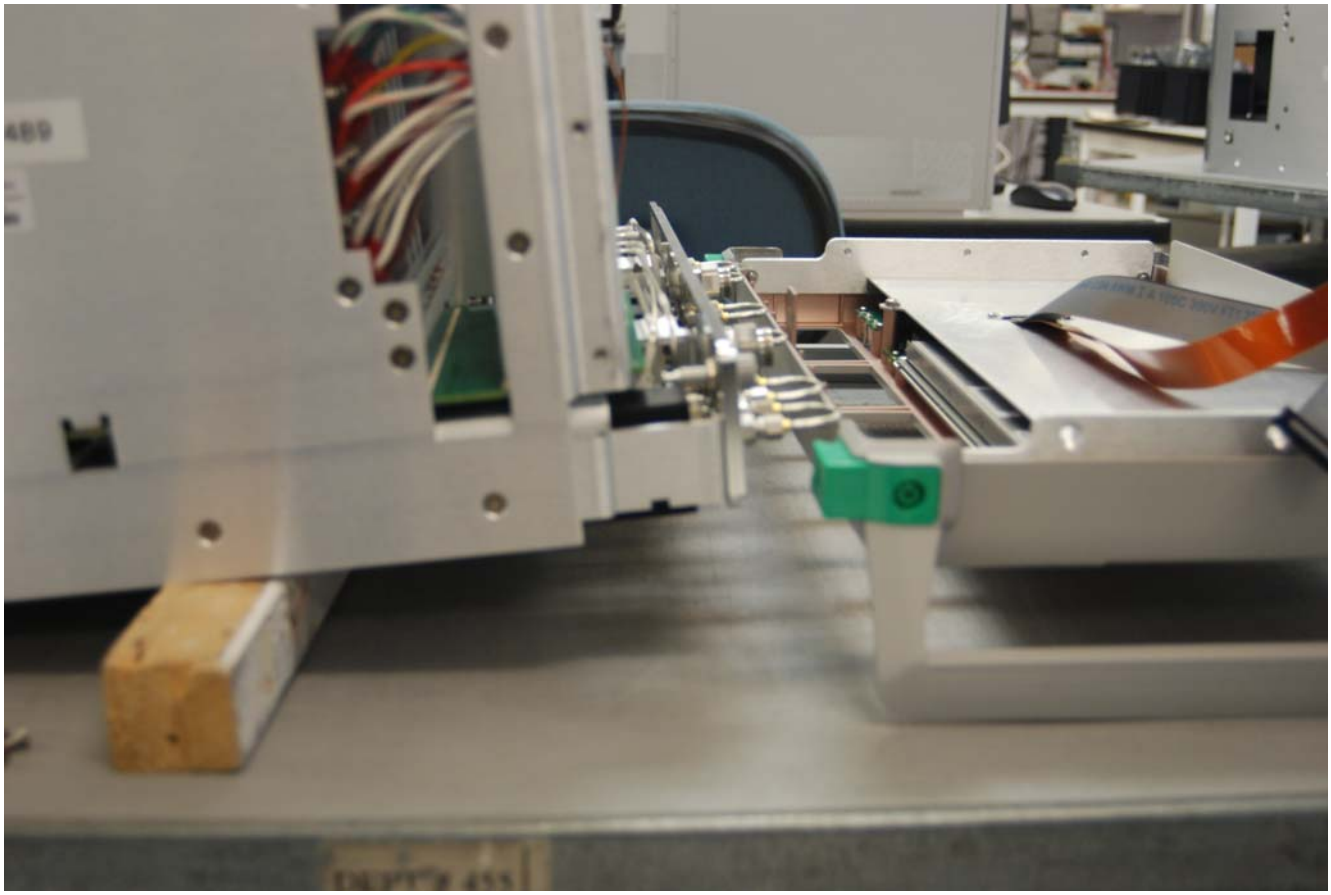

Figure 10-2. Blocking Under Instrument with Cover and Front Panel Off – Phase 1 Shown

Remove the Front Panel

6. Remove the three (3) flat head Phillips M4 × 10 mm screws on each side of the Front Panel, six (6) total.

Caution	Be very careful not to strain either the Flex Print or Ribbon cables connecting the Front Panel to the Phase 1 Motherboard 2 PCB connectors. When pulling the Front Panel out, be extra careful not to pull it out too far. Recommended is to use two people to gently “walk” the front panel off the chassis, and, when clear, set it down, protecting the cables. If the VNA is equipped with Option 051, 061, or 062, be very careful not to bend the RF Deck front panel loops.

7. Gently pull the Front Panel straight off and lay it flat on a non-scratch surface, with the buttons down, resting on the handles or rack mount ears.
8. Slide the Panel under the Front Panel Loops a bit to obtain slack in the two Front Panel Cables. The figure below (Figure 10-3) shows the ribbon and flex cable connections.

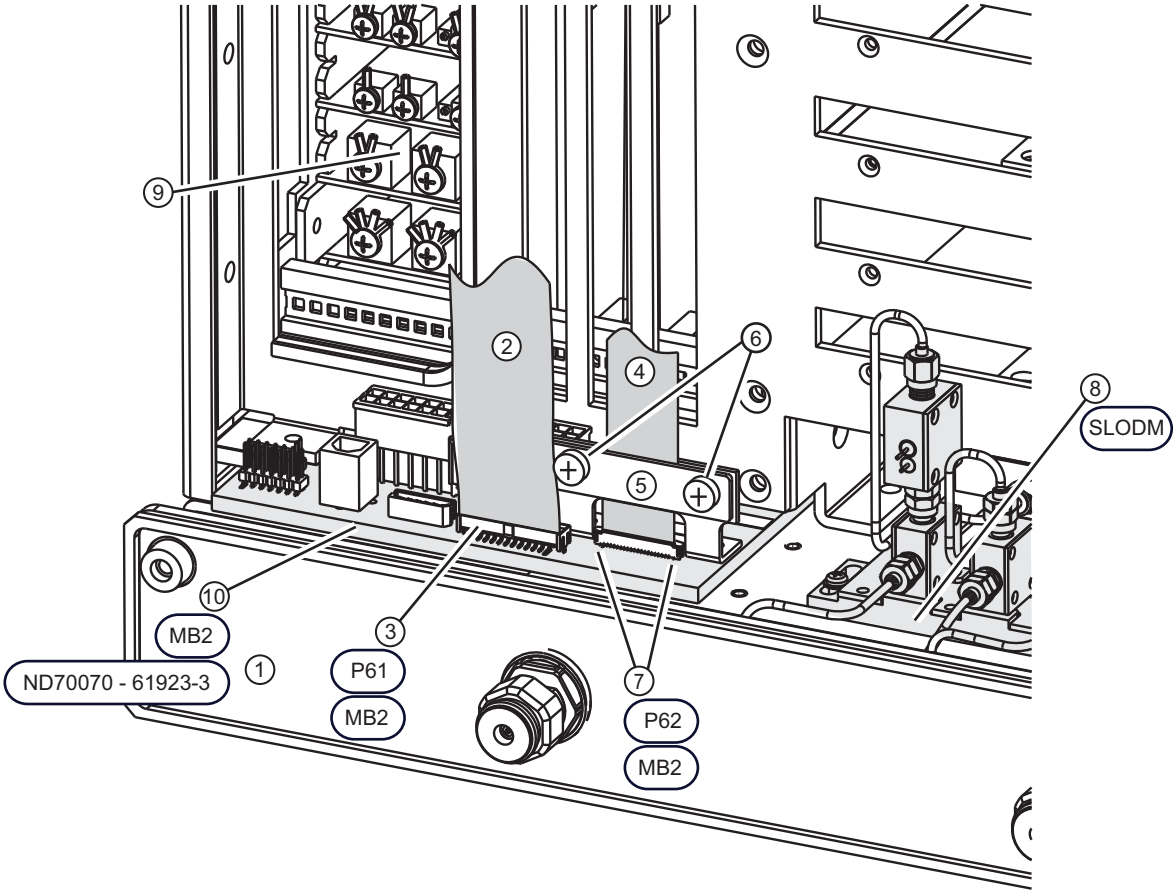

Removing a Phase 1 Front Panel

Front Panel not shown for clarity.

1. RF Deck Front Panel
2. Gray ribbon cable from Front Panel.
3. Gray ribbon cable plugged into P61 Connector on Motherboard 2 PCB Assembly. Pull out to remove.
4. Gold Flex PCB Cable from Front Panel.
5. Gold Flex PCB cable connector stress relief/retainer bar.
6. Phillips-head captive screws on cable connector retainer bar.
7. White locking tabs on P62 Connector on Motherboard 2 PCB. LIft up 1 mm to release
8. SLODM – Sampler/LO Distribution Module PCB and Chassis Assembly
9. Power Supply Module distribution connectors. Harness connecting to P94 connector on Motherboard 2 PCB Assembly not shown.
10. Phase 1 Motherboard 2 PCB – ND70070 – 61923-3

Figure 10-3. Phase 1 Front Panel Cable Connections

Remove the Cables from the Chassis

9. The two Front Panel Cables are permanently attached to the Front Panel

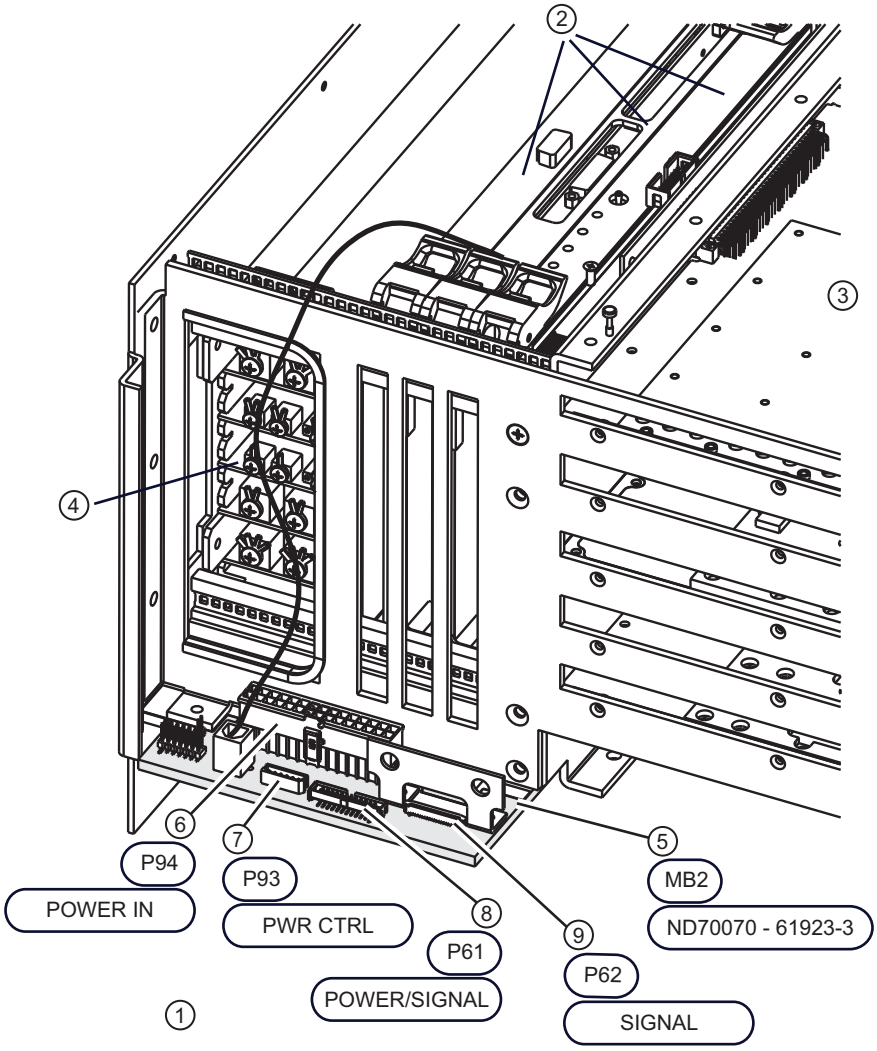

Orientation	Phase 1 Motherboard 2 PCB Assembly Connectors
1. Front Panel location, removed here.	6. P94 Power In Connector
2. Top Side Digital PCB Assemblies – A3, A4, A6, A7, A8, A10	7. P93 Pwr Ctrl (Power Control) Connector
3. Right Side Analog Module Assemblies – A11, A13, A15	8. P61 Front Panel Power Connector – For ribbon cable.
4. Power Supply Module Front End Power Harness Connectors	9. P62 Front Panel Signal Connector – For gold Flex PCB cable
5. Motherboard 2 PCB Assembly – Mounted horizontally below card chassis and above RF Deck.	

Figure 10-4. Phase 1 Front Panel Cable Connectors - Close-up Diagram

Identify the Phase 1 Motherboard 2 PCB Connectors

10. Use Figure 10-5 below to identify the Motherboard 2 PCB (MB2 PCB) front connectors for the Front Panel and the Power Supply.

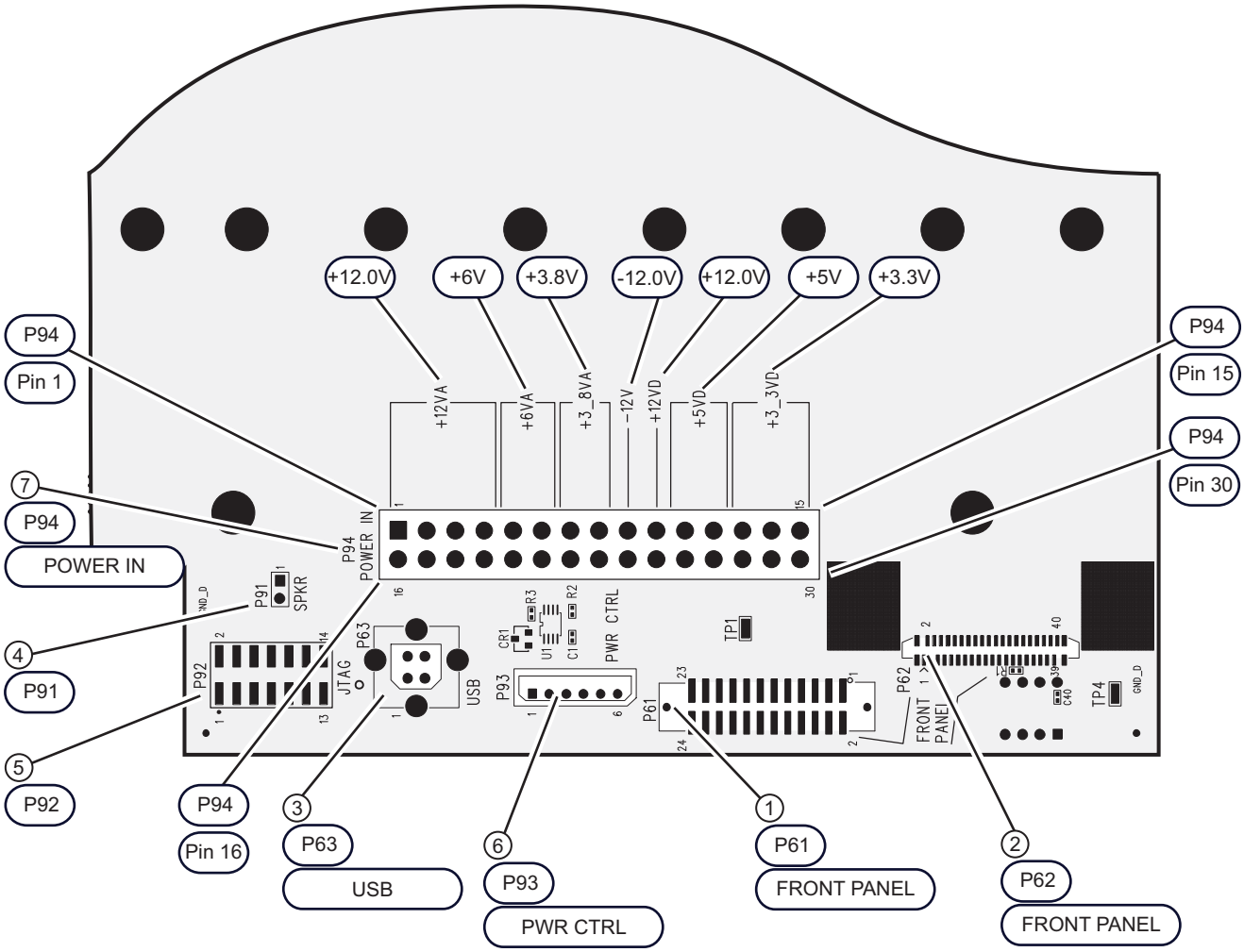

1. P61 – Ribbon Cable Connector to Front Panel	P94 – Connector Pin 1
2. P62 – Ribbon Cable Connector to Front Panel	P94 – Connector Pin 15
3. P63 – USB Type A Connector	P94 – Connector Pin 16
4. P91 – Speaker – Not used	P94 – Connector Pin 30
5. P92 – JTAG – Not used	
6. P93 – Power Control Connector to Power Supply	
7. P94 – Power In Connector to Power Supply	

Figure 10-5. Phase 1 Motherboard 2 PCB Assembly – ND70070 – 61923-3 – Front

Remove Gray Ribbon Cable

11. Identify the grey ribbon cable for power and signal communication with the Front Panel Assembly.

- It is connected to Motherboard 2 PCB Assembly connector P61.
- The other end of the cable is permanently attached to the Front Panel assembly.

12. Remove the gray ribbon cable by lifting its connector straight up. There are no latches on the connector.

Remove Gold Flex PCB Cable

13. Identify the gold colored Flex PCB Cable for signal communication with the Front Panel Assembly.

- It is connected to the Motherboard 2 PCB Assembly connector P62.
- The other end of the cable is permanently attached to the Front Panel assembly.

Caution	The gold Flex PCB cable is fragile. While the Flex PCB cable is connected, keep the Front Panel and Chassis within 2” of each other in front-to-back and side-to-side alignment.

14. Remove the Flex PCB Cable connector locking bar and set aside. The two (2) Phillips-head screws are captive in the locking bar.

15. Identify the Flex PCB Cable ZIF (Zero Insertion Force) connector and its white colored locking tabs.

Caution	The ZIF (Zero Insertion Force) connector can be damaged if the white locking tabs are lifted too high. Only lift the tabs a maximum of 1 mm (~1/16”).

16. On the Flex PCB Cable ZIF connector, gently lift up the two white connector latches, one at each end of the connector.

- The lift is only about 1 mm (~1/16”).
- The white connector tabs move up to release the locking bar on the Flex PCB Cable.

17. Lift out the Flex PCB Cable.

18. The Phase 1 Front Panel removal procedure is complete.

19. Either set the Front Panel Assembly aside or replace it using Section 10-5 “Prepare the Replacement Front Panel Assembly” on page 10-16 below.

10-4 Remove the Phase 2 Front Panel Assembly

The external Front Panel user controls are identical on all Phase VNAs. The removal and replacement procedure changes depending on whether the Front Panel cables are permanently attached or can be removed.

Use this procedure to remove the Front Panel Assembly to either replace it or to provide access to other deeper dwelling components. Phase 2 Front Panel Assembly have three (3) removable cables. To remove a Phase 1 Front Panels with two (2) permanently attached cables, see Section 10-3 “Remove the Phase 1 Front Panel Assembly” on page 10-3 above.

Parts and Applicability

- Phase 2 – MS4640A Front Panel Assembly – ND73195 – 3-72015
  - For VNAs with S/N 1133242 and higher.
  - There are no user serviceable parts inside the Front Panel.
  - Phase 2 Front Panels do not come with the detachable HDMI, USB, or Power/Signal ribbon cables.
  - Phase 2 Front Panels do not come with the Model Identity Label – 3-60124-XX which must be ordered separately.
  - Phase 2 Front Panels can only be used with the Phase 2 Motherboard 2 PCB Assembly – ND73878 – 3-72813-3.
  - Phase 2 Front Panels can only be used with the Phase 2 Power Supply Module – ND73933 – 71995 with Power Cable Harness 3-71996 and 3.3 Volt Sense Cable – 3-67873.

Note	The instrument Model Identity Label must be ordered separately and can be applied at the end of the Front Panel installation procedure. The label part number varies depending on the instrument model. Each label is valid for any combination of options for that model: • MS4642A Model Identity Label – No ND – 3-60124-9 • MS4644A Model Identity Label – No ND – 3-60124-10 • MS4645A Model Identity Label – No ND – 3-60124-13 • MS4647A Model Identity Label – No ND – 3-60124-11 For replacement instructions, see Section 10-5 “Prepare the Replacement Front Panel Assembly” on page 10-16.

Procedure

1. Prepare work area, work surface, and observe safety issues.
   - See Section 7-4 “Common - Prepare Work Area and Safety” on page 7-9.
2. Remove Outer Cover.
   - See Section 7-5 “Common - Remove Outer Cover” on page 7-10.
3. Remove Inner Cover.
   - See Section 7-6 “Common - Remove Inner Cover” on page 7-13.
4. Position the instrument so that it is right-side up, RF deck down.
5. Add a spacer at least 5 cm (~2”) thick under the front of the unit, approximately 10 cm (~4”) in from the instrument front as shown in Figure 10-1 on page 10-4 and Figure 10-2 on page 10-5 above.
   - The spacer should be at least 50 mm (~20”) long.
   - The spacer creates clearance for the Front Panel Loops located on the RF Deck.
   - A ~50 cm (~20”) length of lumber “2 by 2” provides a perfect spacer.

Remove the Front Panel

6. Remove the three (3) flat head Phillips M4 × 10 mm screws on each side of the Front Panel, six (6) total.

Caution	When pulling the Front Panel out, be extra careful not to pull it out too far. Recommended is to use two people to gently “walk” the front panel off the chassis, and, when clear, set it down, protecting the cables. If the VNA is equipped with Option 051, 061, or 062, be very careful not to bend the RF Deck front panel loops.

7. Gently pull the Front Panel straight off and lay it flat on a non-scratch surface, with the buttons down, resting on the handles or rack mount ears.Slide the Panel under the Front Panel Loops a bit to obtain slack in the three (3) Front Panel Cables as shown in Figure 10-6 below.

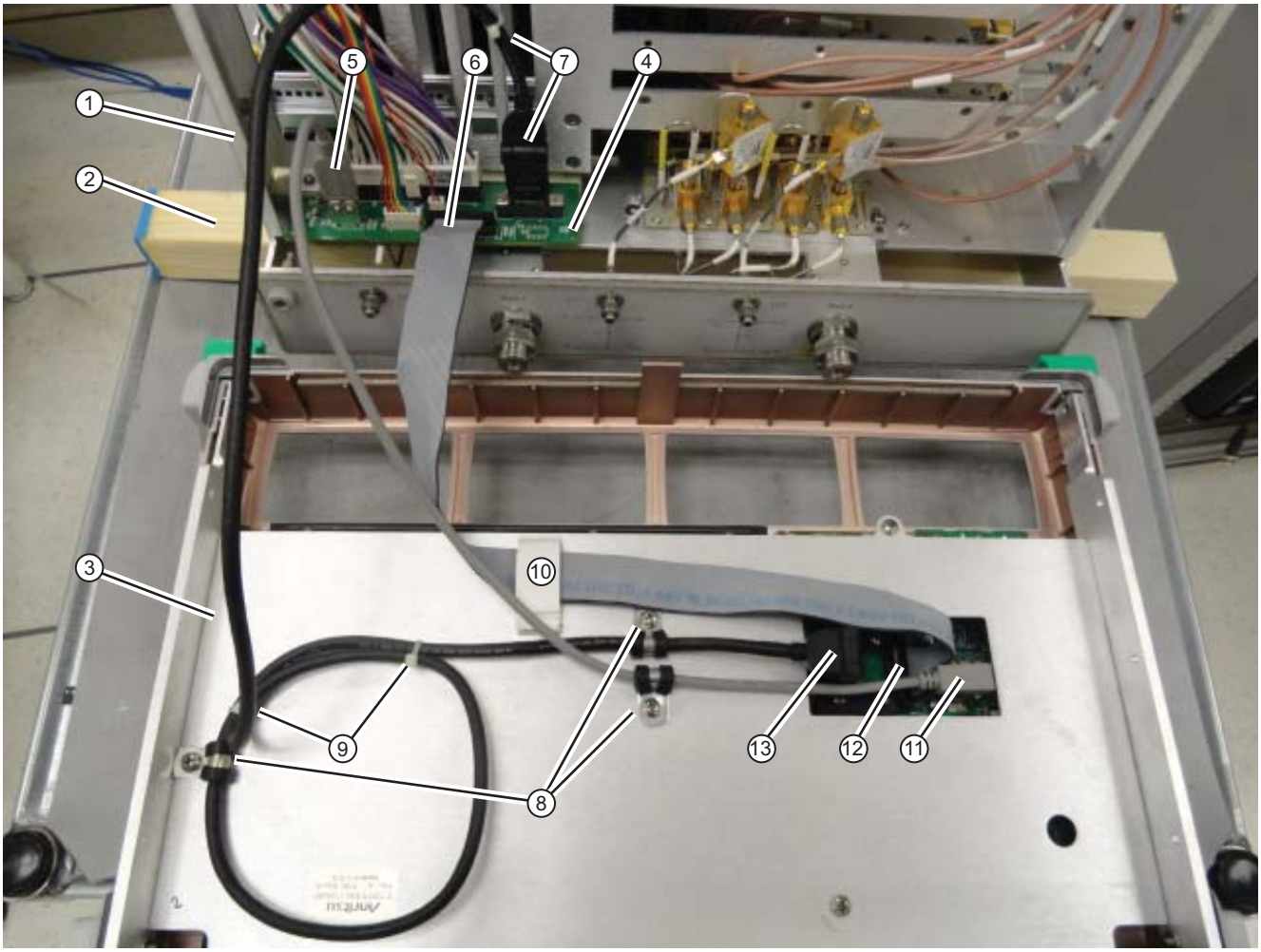

1. VectorStar VNA Instrument Chassis with RF Deck Front Panel and Connectors below.
2. Lumber spacer holding instrument chassis clear of RF Deck loops and connectors.
3. Phase 2 Front Panel Assembly – ND73195 – 3-72015 – Face down with rear connectors
4. Phase 2 Motherboard 2 (MB2) PCB Assembly – ND73878 – 3-72813-3 – Front edge connectors for power and front panel shown.
5. MB2 PCB P63 USB Type A connector with USB cable to Front Panel USB Type B J22 connector.
6. MB2 PCB P61 Power/Signal Ribbon Connector with ribbon cable to Front Panel J6 connector.
7. MB2 PCB P97 HDMI connector with flexible-head HDMI cable to Front Panel HDMI connector. Above the connector, note the cable tie holding the cable to the instrument chassis.
8. Cable clamps and screws holding HDMI cable (2 clamps) and USB cable (1 clamp) in place on the Front Panel chassis.
9. Cable ties holding HDMI cable loop. Do not cut these cable ties.
10. Adhesive-mount ribbon cable clamp. Lift clamp latch to release cable.
11. Front Panel USB connector
12. Front Panel Power/Signal ribbon connector
13. Front Panel HDMI connector

Figure 10-6. Phase 2 Front Panel Assembly - Open with cable connections

Remove or Replace the Phase 2 Front Panel Assembly

8. The next steps depend on whether the Front Panel is removed to access a deeper dwelling component or to replace it.
   - To remove the Front Panel, do Step #9 through Step #15 below.
   - To replace the Front Panel, do Step #16 through Step #23 below.

Remove the Phase 2 Front Panel Assembly

9. Remove the Front Panel cables from the Phase 2 Motherboard 2 PCB (MB2 PCB) Assembly, leaving the cables attached to the Front Panel.
10. Use Figure 10-7 below to identify the Phase 2 MB 2 PCB front connectors.

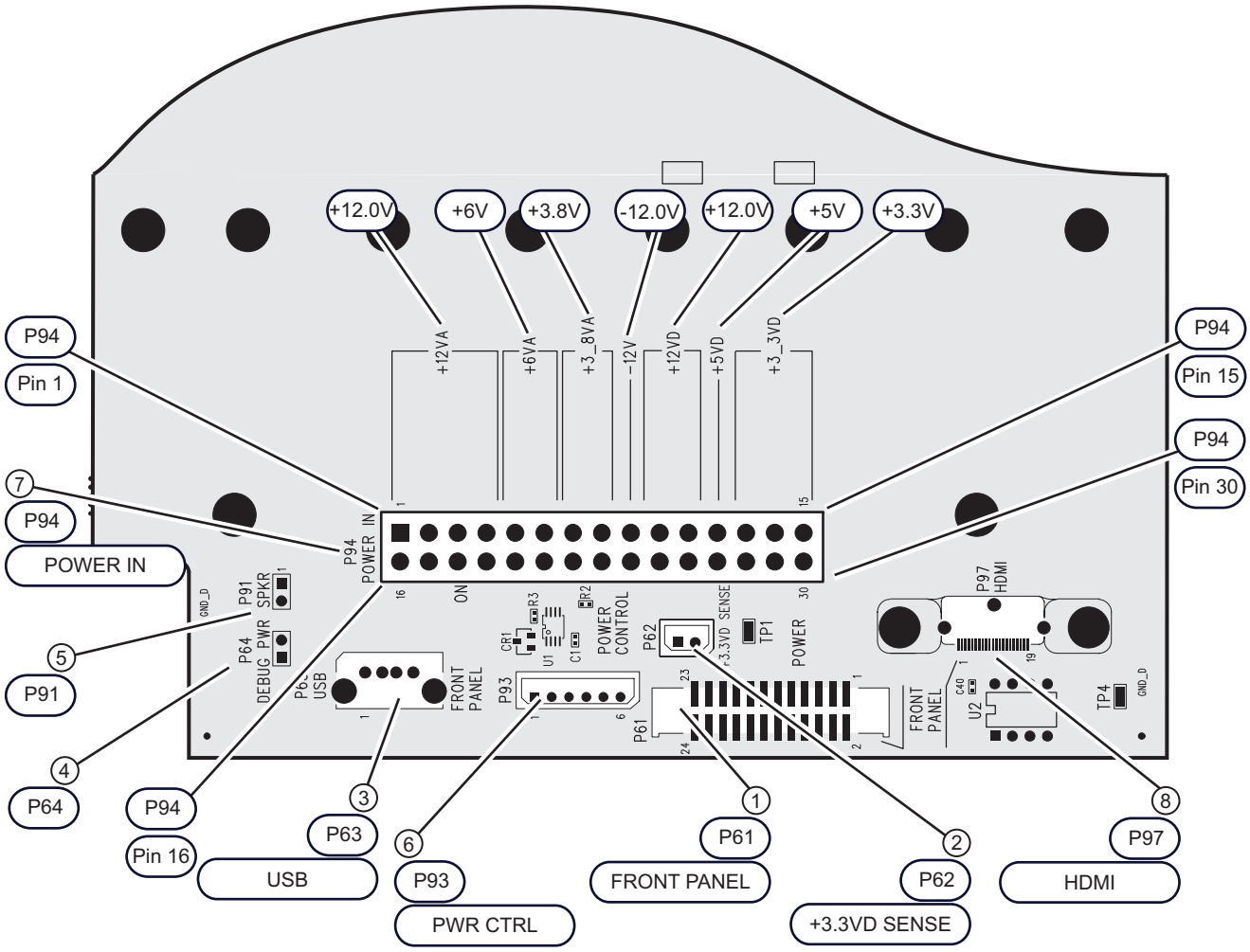

Figure 10-7. Phase 2 Motherboard 2 PCB Assembly – ND73878 – 3-72813-3 – Front Detail

1. P61 – Ribbon Cable Connector to Front Panel	P94 – Connector Pin 1
2. P62 – +3.3 VDC Sense Connector to Power Supply Module	P94 – Connector Pin 15
3. P63 – USB Type A Connector to Front Panel	P94 – Connector Pin 16
4. P64 – Debug Power – Not used	P94 – Connector Pin 30
5. P91 – Speaker – Not used	
6. P93 – Power Control Connector to Power Supply	
7. P94 – Power In Connector to Power Supply	
8. P97 – HDMI Connector to Front Panel	

Figure 10-7. Phase 2 Motherboard 2 PCB Assembly – ND73878 – 3-72813-3 – Front Detail

11. Remove the USB Cable with the Type A connector from the MB2 PCB P63 connector.

12. Remove the Power/Signal Ribbon Cable from the MB2 PCB P61 connector.

13. Cut the cable tie holding the HDMI Cable to the instrument chassis.

Note	Do not cut the cable ties holding the HDMI Cable excess length loop.

14. Remove the HDMI Cable from the MB2 PCB P97 connector to Front Panel leaving the loop cable ties in place.

15. Set the Phase 2 Front Panel Assembly aside.

Replace the Phase 2 Front Panel Assembly

16. Remove the Front Panel cables from the Front Panel, leaving them attached to the Phase 2 MB2 PCB. Refer to Figure 10-6, “Phase 2 Front Panel Assembly - Open with cable connections” on page 10-13 above.

17. Remove the USB Type B Plug from the Front Panel J22 USB connector.

18. Remove the cable clamp screw holding the USB cable to the Front Panel chassis.

19. Remove the Power/Signal Ribbon Plug from the Front Panel J6 connector.

20. Unlatch the ribbon cable clamp to free Power/signal Ribbon cable.

21. Remove the two (2) cable clamp screws holding the HDMI cable to the Front Panel chassis.

22. Remove the HDMI Plug from the Front Panel HDMI connector.

23. The Phase 2 Front Panel Assembly is ready to prepare. Refer to Section 10-5 “Prepare the Replacement Front Panel Assembly” on page 10-16 below.

10-5 Prepare the Replacement Front Panel Assembly

Use this procedure to prepare a replacement Front Panel Assembly and apply the appropriate Model Identity Label.

Parts and Applicability

- Phase 1 – MS4640A Front Panel Assembly – ND70060 – 62078
  - For VNAs with S/N 1106189 and lower.
  - There are no user serviceable parts inside the Front Panel.
  - Phase 1 Front Panels come with two (2) permanently attached ribbon cables.
  - Phase 1 Front Panels do not come with the Model Identity Label – 3-60124-XX which must be ordered separately.
  - Phase 1 Front Panels can only be used with the Phase 1 Motherboard 2 PCB Assembly – ND70070 – 61923-3.
  - Phase 1 Front Panels can only be used with the Phase 1 Power Supply Module – ND70072 – 62088 with Power Cable Harness 3-72058.
- Phase 1 – MS4640A Front Panel Assembly – ND73194 – 73257
  - For VNAs with S/N 1106190 up to and including S/N 1132241.
  - Requirements as above.
- Phase 2 – MS4640A Front Panel Assembly – ND73195 – 3-72015
  - For VNAs with S/N 1133242 and higher.
  - There are no user serviceable parts inside the Front Panel.
  - Phase 2 Front Panel Replacement Kits do not come with the detachable HDMI, USB, or Power/Signal cables. The three cables must be removed from the to-be-replaced Front Panel, transferred to the replacement Front Panel, and then dressed into their cable clamps and retaining clamps.
  - Phase 2 Front Panels do not come with the Model Identity Label – 3-60124-XX which must be ordered separately.
  - Phase 2 Front Panels can only be used with the Phase 2 Motherboard 2 PCB Assembly – ND73878 – 3-72813-3.
  - Phase 2 Front Panels can only be used with the Phase 2 Power Supply Module – ND73933 – 71995 equipped with Power Cable Harness 3-71996 and 3-3 Volt Sense Cable – 3-67873.

Procedure

1. Leave the LCD protective covering in place until the instrument is fully assembled.
2. Make sure there are two (2) handles or two (2) rack mount ears attached to the Front Panel assembly. These must be exchanged between the to-be-replaced Front Panel and the new Front Panel.
3. On the to-be-replaced Front Panel, for each handle or rack mount ear, remove the two (2) Phillips-head screws – Anritsu Z-951102 holding each handle or ear in place.
4. Once removed, attach the handle or ear to the new Front Panel.
5. Make sure the screws are correctly threaded in a few turns but do not tighten the handle/ear screws until the Outer Cover has been added.
6. Add the appropriate Model Identity Label to the new Front Panel.

Note	If the replacement Front Panel Assembly has been ordered and/or installed, the instrument-model matching Model Identity Label must be ordered separately. The Front Panel Assembly does not come with a Model Identity Label.

7. Use one of the following Model Identity Labels:

- MS4642A Model Identity Label – No ND – 3-60124-9
- MS4644A Model Identity Label – No ND – 3-60124-10
- MS4645A Model Identity Label – No ND – 3-60124-13
- MS4647A Model Identity Label – No ND – 3-60124-11

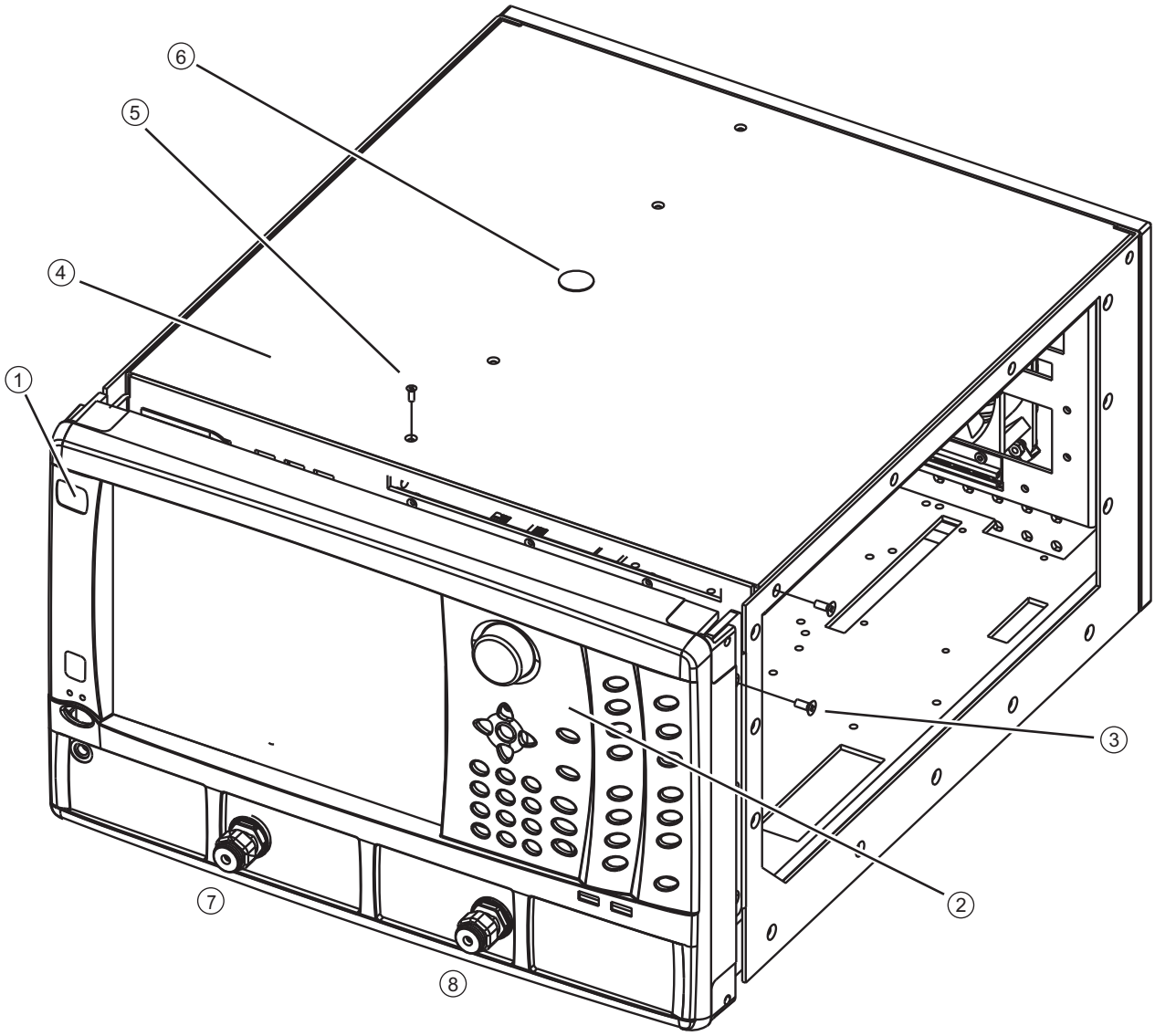

1. Model Identity Label – 3-60124-XX	5. Inner cover Mounting Screws, five (5) each.
2. Front Panel	6. Calibration Sticker – 3-48371 – Not provided as a replacement part.
3. Front Panel Mounting Screws, three (3) each side, six (6) total	7. Test Port 1 on RF Deck
4. Inner Cover – Notch and cutout is oriented toward rear panel.	8. Test Port 2 on RF Deck

Figure 10-8. Model Identity Label – 3-60124-XX and Front Panel

8. Clean the label holder recess on the Front Panel with appropriate cleaner and make sure it is dry before proceeding.
    - Recommended cleaner is Anritsu 783-1358.
9. Peel off the label backing. Position the label in the label recess.
10. Smooth from the center out.
11. The front panel is ready to be installed.

10-6 Install the Phase 1 Front Panel Assembly

Use this procedure to install the existing or replacement Phase 1 Front Panel Assembly on the instrument. The Front Panel is also replaced using this procedure after the installation procedures listed above in Section 10-2 “Access for Other Components” on page 10-1.

- Phase 1 – MS4640A Front Panel Assembly – ND70060 – 62078
  - For VNAs with S/N 1106189 and lower.
  - Phase 1 Front Panels come with two (2) permanently attached ribbon cables.
  - There are no user serviceable parts inside the Front Panel.
  - Phase 1 Front Panels do not come with the Model Identity Label – 3-60124-XX which must be ordered separately.
  - Phase 1 Front Panels can only be used with the Phase 1 Motherboard 2 PCB Assembly – ND70070 – 61923-3.
  - Phase 1 Front Panels can only be used with the Phase 1 Power Supply Module – ND70072 – 62088 with Power Cable Harness 3-72058.
- Phase 1 – MS4640A Front Panel Assembly – ND73194 – 73257
  - For VNAs with S/N 1106190 up to and including S/N 1132241.
  - Requirements as above.

Procedure

Assumptions

1. It is assumed that the following procedures have been completed:
   - If the Front Panel was replaced, the handles or rack mount ears have been transferred from the old to the new Panel.

Caution	Either the handles or rack mount ears must be installed on the Front Panel in order to protect the Front Panel loops and controls during the installation process.

   - The four (4) handle/rack mount ear mounting screws are inserted and threaded, but not tightened. They will be tightened after the Outer Cover is in place.
   - If the Front Panel was replaced, a new model identity label was added to the new Panel.

Common Procedures

2. If the common procedures have already been completed, skip ahead to Step #6 below.
3. Prepare work area, work surface, and observe safety issues.
   - See Section 7-4 “Common - Prepare Work Area and Safety” on page 7-9.
4. Remove Outer Cover.
   - See Section 7-5 “Common - Remove Outer Cover” on page 7-10.
5. Remove Inner Cover.
   - See Section 7-6 “Common - Remove Inner Cover” on page 7-13.
6. Position the instrument so that it is right-side up, RF deck down.

Add Spacer

7. Add a spacer at least 5 cm (~2”) thick under the front of the unit, approximately 10 cm (~4”) in from the instrument front.
   - The spacer should be at least 50 mm (~20”) long.
   - The spacer creates clearance for the RF Deck Front Panel Loops.
   - A lumber 2” × 2” board provides an ideal spacer.

- See Figure 10-1, “Phase 1 Front Panel Assembly” on page 10-4 above.

8. Align the Front Panel so that the panel and chassis centerlines are within ~2.5 cm (~1”) of each other. Position the Front Panel so there is less than ~5 cm (~2”) between the Panel and the chassis.

Install the Gold Flex PCB Cable

9. See the figures for connector locations:
   - Figure 10-3, “Phase 1 Front Panel Cable Connections” on page 10-7 above.
   - Figure 10-5, “Phase 1 Motherboard 2 PCB Assembly – ND70070 – 61923-3 – Front” on page 10-9 above.
10. On the right side P62 connector, gently lift up the two white connector latches, one at each end of the connector.
    - The lift is only ~1 mm (~1/16”) or so.
    - The white cable holder moves up to release the Flex Cable.
11. Making sure the cable is not twisted, insert the gold Flex PCB cable into the connector and snap down each white tab.
12. Place the strain relief/retainer bar over its threaded holes and use a Phillips-head screw driver to tighten the two screws.

Install the Gray Ribbon Cable

13. See Figure 10-3, “Phase 1 Front Panel Cable Connections” on page 10-7 above for connector locations.
14. Make sure the gray ribbon cable is not twisted, and insert it in the right middle P61 connector. The connector is keyed and can only go in one way.
15. When complete, the installation should match Figure 10-3 above.

Install the Front Panel

16. Make sure each cable is completely seated and secure.
17. Swing the Front Panel up, making sure the cables are correctly positioned, and slide the Panel ears into the INSIDE of the chassis flanges.
18. Loosely insert three (3) flat head Phillips M4 × 10 on each side of the Front Panel, six (6) screws total. Make sure each screws is in several turns but do not yet tighten.
19. When all are seated, adjust Front Panel positioning as required, and then tighten all six screws.

Install Covers

20. Install the Inner Cover.
    - See Section 7-7 “Common - Install Inner Cover” on page 7-15.
21. Install the Outer Cover.
    - See Section 7-8 “Common - Install Outer Cover” on page 7-16.
22. Tighten the four handle screws.
23. If a new Front Panel was installed, and not already done, install the Model Identity Label.
    - See Section 10-5 “Prepare the Replacement Front Panel Assembly” on page 10-16.

Final Tests

24. Perform any final tests as required.

10-7 Install the Phase 2 Front Panel Assembly

Use this procedure to install the existing or replacement Phase 2 Front Panel Assembly on the instrument. The Front Panel is also replaced using this procedure after the installation procedures listed above in Section 10-2 “Access for Other Components” on page 10-1.

- Phase 2 – MS4640A Front Panel Assembly – ND73195 – 3-72015
  - For VNAs with S/N 1133242 and higher.
  - There are no user serviceable parts inside the Front Panel.
  - Phase 2 Front Panel Replacement Kits do not come with the detachable HDMI, USB, or Power/Signal cables.
  - Phase 2 Front Panels do not come with the Model Identity Label – 3-60124-XX which must be ordered separately.
  - Phase 2 Front Panels can only be used with the Phase 2 Motherboard 2 PCB Assembly – ND73878 – 3-72813-3.
  - Phase 2 Front Panels can only be used with the Phase 2 Power Supply Module – ND73933 – 71995 equipped with Power Cable Harness 3-71996 and 3-3 Volt Sense Cable – 3-67873.

Procedure

Assumptions

1. It is assumed that the following procedures have been completed:

- If the Front Panel was replaced, the handles or rack mount ears have been transferred from the old to the new Panel.

Caution	Either the handles or rack mount ears must be installed on the Front Panel in order to protect the Front Panel loops and controls during the installation process.

- The four (4) handle/rack mount ear mounting screws are inserted and threaded, but not tightened. They will be tightened after the Outer Cover is in place.
- If the Front Panel was replaced, a new model identity label was added to the new Panel.

Common Procedures

2. If the common procedures have already been completed, skip ahead to Step #6 below.

3. Prepare work area, work surface, and observe safety issues.

- See Section 7-4 “Common - Prepare Work Area and Safety” on page 7-9.

4. Remove Outer Cover.

- See Section 7-5 “Common - Remove Outer Cover” on page 7-10.

5. Remove Inner Cover.

- See Section 7-6 “Common - Remove Inner Cover” on page 7-13.

6. Position the instrument so that it is right-side up, RF deck down.

Add Spacer

7. Add a spacer at least 5 cm (~2”) thick under the front of the unit, approximately 10 cm (~4”) in from the instrument front.

- The spacer should be at least 50 mm (~20”) long.
- The spacer creates clearance for the RF Deck Front Panel Loops.
- A lumber 2” × 2” board provides an ideal spacer.
- See Figure 10-1 on page 10-4 above for positioning.

8. Align the Front Panel so that the panel and chassis centerlines are within ~2.5 cm (~1”) of each other. Position the Front Panel so there is less than ~5 cm (~2”) between the Panel and the chassis.

Add the Front Panel Cables

9. Refer to Figure 10-6, “Phase 2 Front Panel Assembly - Open with cable connections” on page 10-13 above.
10. Position the cables loosely in position in the Front Panel chassis.

HDMI Cable

11. Connect the HDMI Cable and Plug to the Front Panel HDMI connector. Note that the two (2) excess length cable ties should still be in place.
12. Position the two (2) cable clamp for the HDMI cable and fasten the mounting screws in place.

Power/Signal Ribbon Cable

13. Unlatch the ribbon cable clamp mounted on the Front Panel chassis, insert the Power/Signal Ribbon Cable, and then re-latch the clamp.
14. Connect the keyed Power/Signal Ribbon Plug to the Front Panel J6 connector.

USB Cable

15. Connect the USB Type B Cable and Plug to the Front Panel J22 USB connector.
16. Position the USB Cable cable clamp screw for the USB Cable and fasten the mounting screw in place.

Install the Front Panel

17. Swing the Front Panel up, making sure the cables are correctly positioned, and slide the Panel ears into the INSIDE of the chassis flanges.
18. Loosely insert three (3) flat head Phillips M4 × 10 on each side of the Front Panel, six (6) screws total. Make sure each screws is in several turns but do not yet tighten.
19. When all are seated, adjust Front Panel positioning as required, and then tighten all six screws.

Install Covers

20. Install the Inner Cover.
    - See Section 7-7 “Common - Install Inner Cover” on page 7-15.
21. Install the Outer Cover.
    - See Section 7-8 “Common - Install Outer Cover” on page 7-16.
22. Tighten the four handle screws.
23. If a new Front Panel was installed, and not already done, install the Model Identity Label.
    - See Section 10-5 “Prepare the Replacement Front Panel Assembly” on page 10-16.

Final Tests

24. Perform any final tests as required.

Chapter 11 — RF Deck Module Replacement Overview

11-1 Introduction

This chapter provides an overview of the replacement parts located on and in the RF Deck chassis assembly. To avoid damaging components and cables, please read this chapter before attempting any RF Deck module replacements. The replacement parts are organized by their location on the RF Deck in the following major sections:

- Section 11-3 “RF Deck Top Side Center Modules” on page 11-2
- Section 11-4 “RF Deck Top Side Right Modules” on page 11-5
- Section 11-5 “RF Deck Top Side Rear Attenuator Modules - Overview” on page 11-7
- Section 11-6 “RF Deck Top Side Rear Attenuator Modules - Option 061” on page 11-8
- Section 11-7 “RF Deck Top Side Rear Attenuator Modules - Option 062” on page 11-9
- Section 11-8 “RF Deck Bottom Side A18 Modules and PCB” on page 11-11
- Section 11-13 “RF Deck Bottom Side Port Group Modules” on page 11-16

11-2 RF Deck Chassis Assembly

The RF Deck and Chassis Assembly itself is not a replaceable part. Only its attached modules and the A18 RF Control PCB Assembly are available as replacement parts.

Note	In the RF Deck area, many modules have one Engineering Reference “A” Number but can have two (2) separate Replacement/Anritsu Part Numbers depending on the instrument model and/or installed options. For example, the A108 Engineering Reference can refer to either the High Band Transfer Switch (HBTS), 40 GHz – ND70092 – 66221 or the V Integrated Switch (VIS), 70 GHz – ND70093 – 66619. This distinction is described whenever one Engineering Reference can represent multiple parts.

11-3 RF Deck Top Side Center Modules

The Sampler/LO Distribution Module Assembly is located on the RF Deck Top Side near the front center. This is nominally identified as the A111 module assembly and consists of individual replaceable components including the A111. The complete assembly is not available as a single replaceable part. Common to all models with any combination of options, the Sampler/LO Distribution Module Assembly can only be serviced if the Front Panel and the RF Deck are removed from the instrument. The module assembly consists of a number of component parts that vary depending in the instrument serial number and equipped options:

- A111 LO Distribution Module – ND70082 – 66270 or ND73193 – 72440
- A100 Sampler Module – ND70082 – 64180
- A101 Sampler Module – ND70082 – 64180
- A102 Sampler Module – ND70082 – 64180
- A103 Sampler Module – ND70082 – 64180
- A130 LO Coupler Module – ND70083 – 68848
- A131 LO Coupler Module – No ND – 70685
- A132 LO Coupler Module – No ND – 70685

The basic replacement procedure is to remove the Front Panel and the RF Deck from the instrument chassis. After attaching T3545 Fixtures, the Sampler/LO Distribution Module Assembly is removed from the RF Deck and then disassembled to access the to-be-replaced module. The installation procedure is the reverse. The module components are the same for all instrument models and shown below in Figure 11-4. The detailed removal, preparation, and installation procedures are covered in Chapter 15, “RF Deck Top Side Modules”.

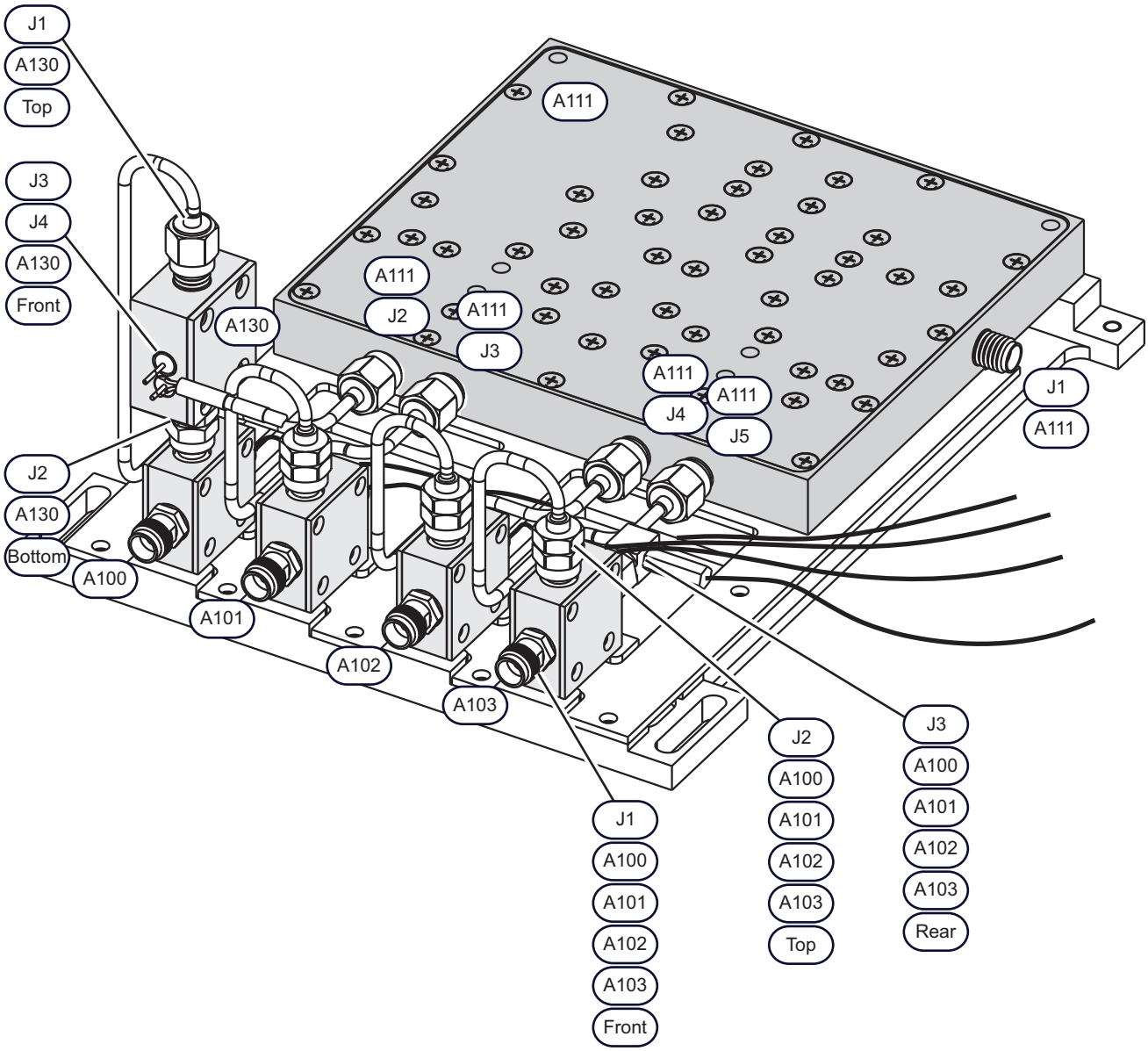

Figure 11-1. Typical Sampler/LO Distribution Module Assembly - Phase 1 Shown (1 of 2)

Sampler/LO Distribution Module Assembly	Sampler Module Mounting on A111 LO Distribution Module
The typical Phase 1 Sampler/LO Distribution Module Assembly consists of the modules below: • A111 LO Distribution Module – ND70081 – 66270 • A100 Sampler Module – ND70082 – 64180 • A101 Sampler Module – ND70082 – 64180 • A102 Sampler Module – ND70082 – 64180 • A103 Sampler Module – ND70082 – 64180 • A130 LO Coupler Module – ND70083 – 68848	Each Sampler Module plugs into a socket on the A111 LO Distribution Module Assembly PCB: • A100 Sampler Module – Mounts in the A111 LO Distribution Module Assembly PCB Position 1 at left. • A101 Sampler Module – Mounts in the A111 LO Distribution Module Assembly PCB Position 2 at left center. • A102 Sampler Module – Mounts in the A111 LO Distribution Module Assembly PCB Position 3 at right center. • A103 Sampler Module – Mounts in the A111 LO Distribution Module Assembly PCB Position 4 at right. Each Sampler Module is held in place with two (2) pan head Phillips M2.5 × 10 mm screws.

Figure 11-1. Typical Sampler/LO Distribution Module Assembly - Phase 1 Shown (2 of 2)

Once the Sampler/LO Distribution Module Assembly is removed from the RF Deck, additional disassembly is required to service its components.

11-4 RF Deck Top Side Right Modules

These modules are located on the top right of the RF Deck and can only be serviced after the Front Panel and the RF Deck are removed from the instrument chassis. The modules are the same for all instrument models with any combination of options:

- A113 – 5-20 GHz Doubler Module – ND70080 – 64920
- A115 – Low Band Transfer Switch – ND70079 – 64690
- A116 – Low Band Bridge – ND70078 – 64016 – This is the inboard Low Band Bridge behind the A117.
- A117 – Low Band Bridge – ND70078 – 64016 – This is the outboard Low Band Bridge in front of the A116.

The basic replacement procedure is to remove the covers, the Front Panel assembly, and then the RF Deck. Once protective fixtures are attached to the deck, the attached semi-rigid coaxial cables are disconnected, and if required, the module disconnected from the adjacent module. Finally, the signal/power cable is disconnected, and the module-to-chassis mounting hardware removed. Replacement is the reverse process. The detailed removal, preparation, and installation procedures are covered in Chapter 15, “RF Deck Top Side Modules”.

The RF Deck Top Right Side Modules are shown below in Figure 11-2.

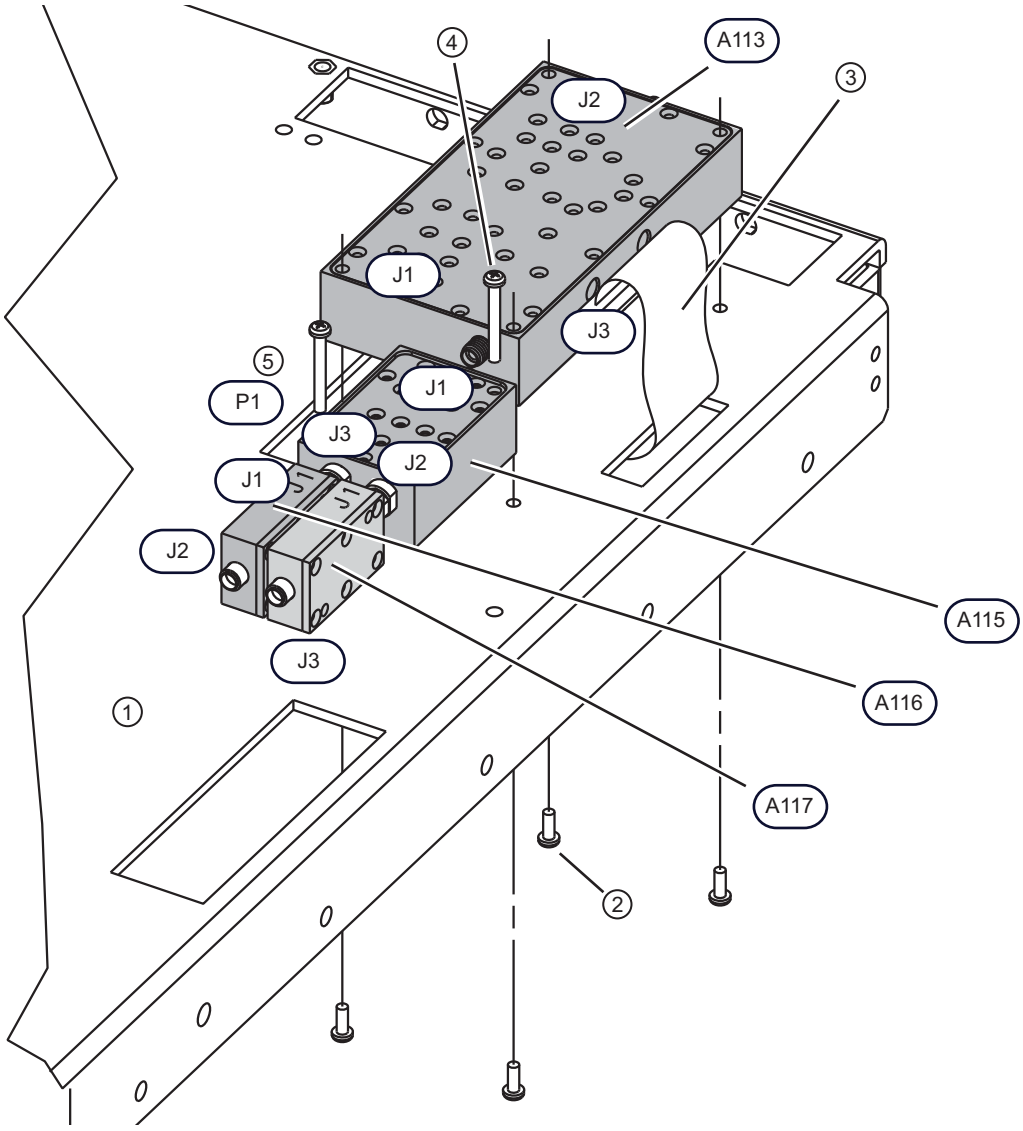

Figure 11-2. RF Deck Top Right Side Modules - A113, A115, A116, and A117 (1 of 2)

RF Deck

1. RF Deck Top Side. The Front Panel and the RF Deck have been removed from the instrument chassis.

A113 5-20 GHz Doubler Module

2. A113 5-20 GHz Doubler Module – ND70080 – 64920
3. Four (4) pan head Phillips M3 × 8 mm mounting screws from the RF Deck Bottom Side into the A113 5-20 GHz Doubler Module.
4. Ribbon cable from A113 5-20 GHz Doubler Module J3 connector to RF Deck Bottom Side A18 RF Control PCB Assembly P6 connector.

A115 Low Band Transfer Switch Module

5. A115 Low Band Transfer Switch Module – ND70079 – 64690
6. Two (2) pan head Phillips M3 × 30 mm mounting screws through the A115 Low Band Transfer Switch Module into the RF Deck chassis.
7. Ribbon cable (not shown here) from A115 Low Band Transfer Switch Module P1 connector to RF Deck Bottom Side A18 RF Control PCB Assembly P1 connector.

A116 Low Band Bridge Module and A117 Low Band Bridge Module

8. A116 Low Band Bridge Module – ND70079 – 64016 – The A116 in the inner module.
9. A117 Low Band Bridge Module – ND70079 – 64016 – The A117 is the outer module.
   - Note that there are four (4) Low Band Bridge Modules modules in the instrument which are the same part.
   - Two here (A116, A117) on the RF Deck Top Side
   - Two (A118, A119) in Test Port 1 and 2 module groups on the RF Deck Bottom Side.

Figure 11-2. RF Deck Top Right Side Modules - A113, A115, A116, and A117 (2 of 2)

11-5 RF Deck Top Side Rear Attenuator Modules - Overview

The number of installed top side attenuator modules depends on the equipped option. The attenuators have different replacement part numbers (ND numbers) but are the same physical/electrical part and are used on all instrument models. There are two Attenuators with Option 061 and four Attenuators with Option 062:

- A124 Low Band Port 1 Test Attenuator – ND70085 – 3-2000-1502
  - Installed for Option 062
- A125 Low Band Port 1 Source Attenuator – ND70084 – 3-2000-1502
  - Installed for Option 061 or Option 062
- A126 Low Band Port 2 Source Attenuator – ND70086 – 3-2000-1502
  - Installed for Option 062
- A127 Low Band Port 2 Test Attenuator – ND70087 – 3-2000-1502
  - Installed for Option 061 or Option 062

11-6 RF Deck Top Side Rear Attenuator Modules - Option 061

The figure below shows the two attenuator RF Deck Top Side configuration for VNAs with Option 061. The detailed removal, preparation, and installation procedures are covered in Chapter 15, “RF Deck Top Side Modules”.

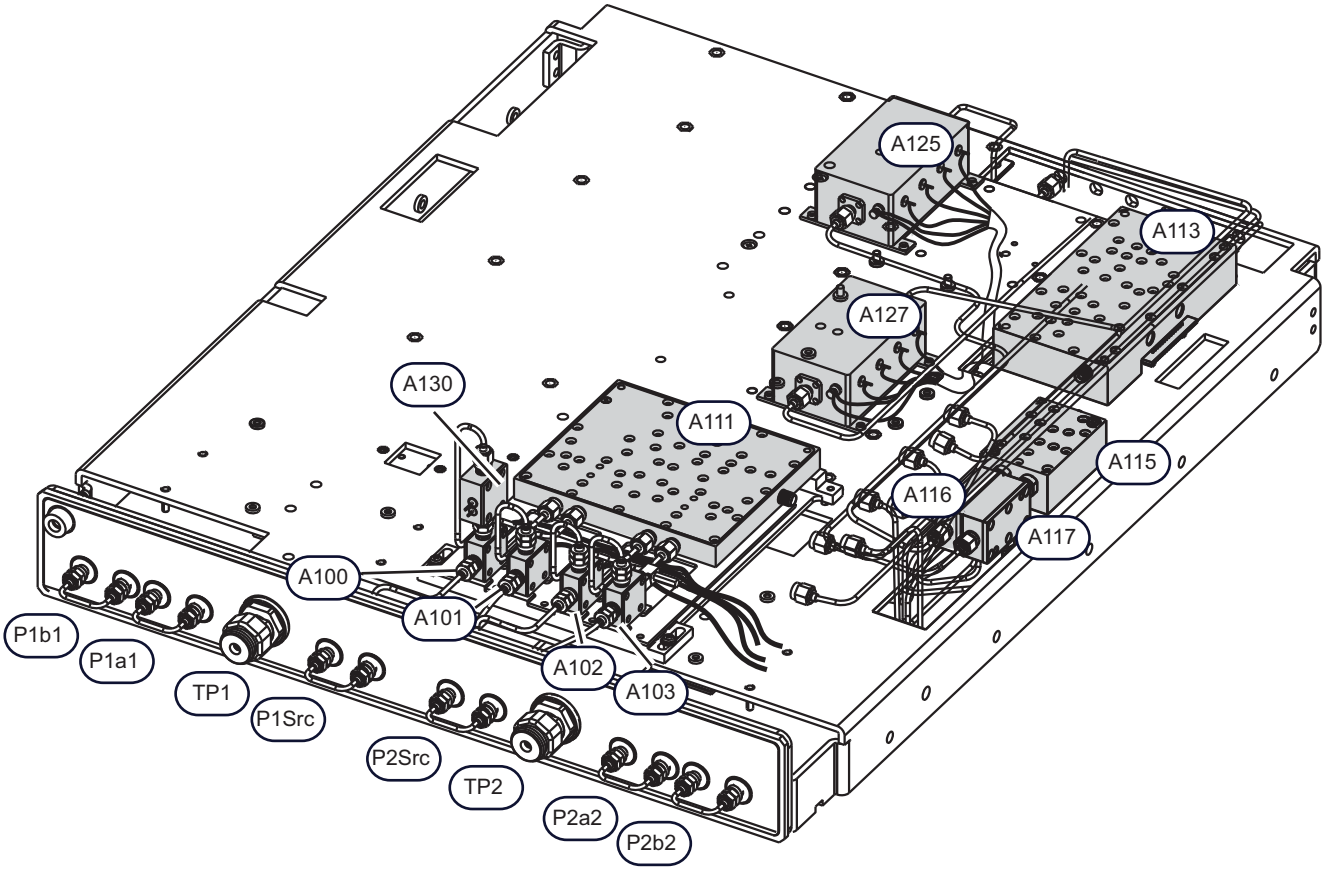

Same for All

Other than the attenuators described below, the RF Deck Top Side modules are the same for all VNA models.

RF Deck Out

The Front Panel and the RF Deck must be removed to service these modules.

Attenuators

The two attenuators below are equipped on VNAs with Option 061. Each attenuator comes with a soldered-on harness for connection to the A18 RF Control PCB Assembly located on the RF Deck Bottom Side.

- A125 Low Band Source Attenuator, Port 1, harness attached – ND70084 – 3-2000-1502
- A127 Low Band Test Attenuator, Port 2, harness attached – ND70087 – 3-2000-1502

RF Deck Top Front Modules

These modules are described in Section 11-3 “RF Deck Top Side Center Modules” on page 11-2 above:

- A111 LO Coupler Distribution Module – ND70081 – 66270
- A100 Sampler Module, mounted on the A111.
- A101 Sampler Module, mounted on the A111.
- A102 Sampler Module, mounted on the A111.
- A103 Sampler Module, mounted on the A111.
- A130 LO Coupler Module., mounted on the A100.
- A113 – 5-20 GHz Doubler Module – ND70080 – 64920

RF Deck Top Side Right Modules

These modules are described in Section 11-4 “RF Deck Top Side Right Modules” on page 11-5 above:

- A113 – 5-20 GHz Doubler Module – ND70080 – 64920
- A115 – Low Band Transfer Switch – ND70079 – 64690
- A116 – Low Band Bridge – ND70078 – 64016
- A117 – Low Band Bridge – ND70078 – 64016

Figure 11-3. MS4640A - RF Deck Top Side Rear Attenuators - Option 061

11-7 RF Deck Top Side Rear Attenuator Modules - Option 062

The figure below shows the four attenuator RF Deck Top Side configuration for VNAs with Option 062. The detailed removal, preparation, and installation procedures are covered in Chapter 15, “RF Deck Top Side Modules”.

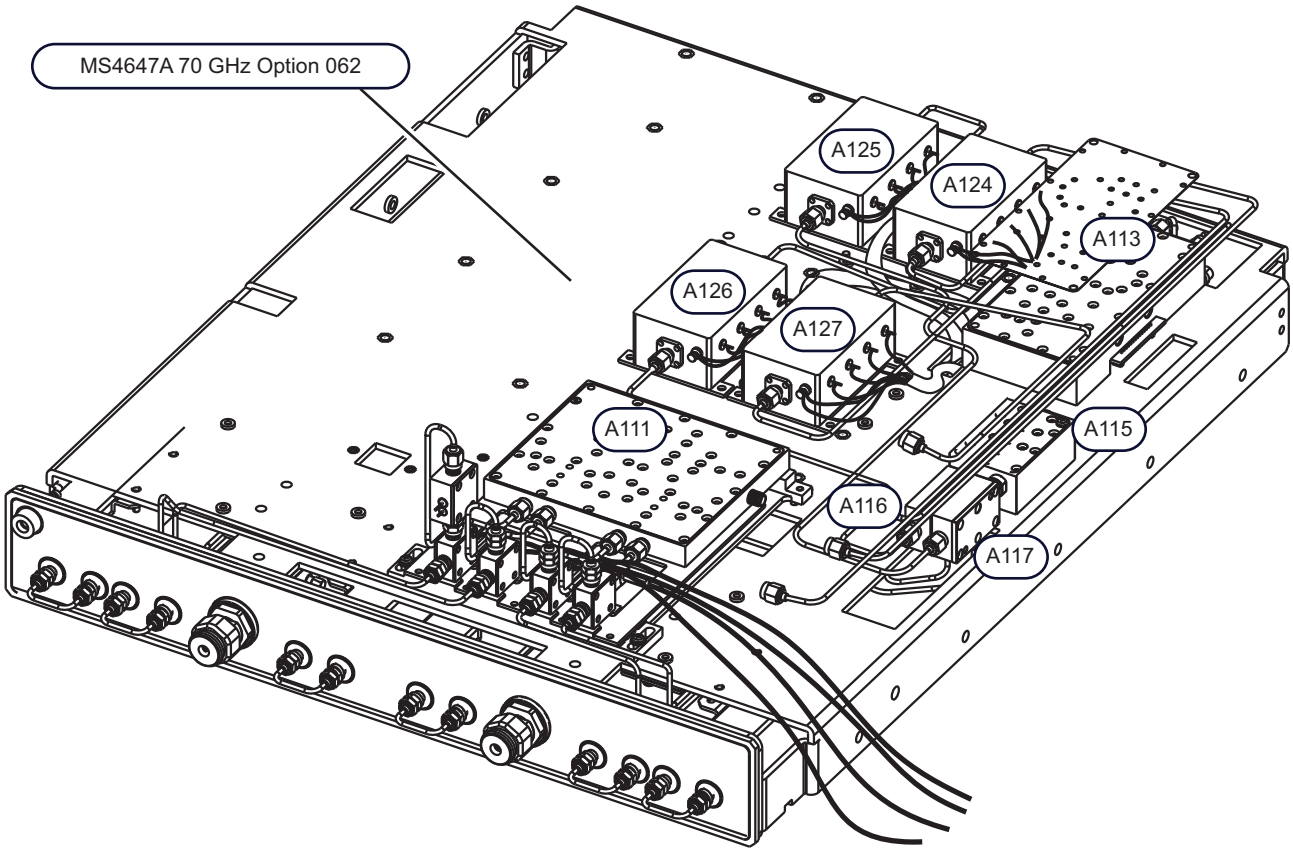

Figure 11-4. MS4640A - RF Deck Top Side Rear Attenuators - Option 062 (1 of 2)

Same for All

Other than the attenuators described below, the RF Deck Top Side modules are the same for all VNA models.

RF Deck Out

The Front Panel and the RF Deck must be removed to service these modules.

Attenuators

The four attenuators below are equipped on VNAs with Option 062. Each attenuator comes with a soldered-on harness for connection to the A18 RF Control PCB Assembly located on the RF Deck Bottom Side.

- A124 Low Band Test Attenuator, Port 1, harness attached – ND70085 – 3-2000-1502
- A125 Low Band Source Attenuator, Port 1, harness attached – ND70084 – 3-2000-1502
- A126 Low Band Source Attenuator, Port 2, harness attached – ND70086 – 3-2000-1502
- A127 Low Band Test Attenuator, Port 2, harness attached – ND70087 – 3-2000-1502

RF Deck Top Front Modules

These modules are described in Section 11-3 “RF Deck Top Side Center Modules” on page 11-2 above:

- A111 LO Coupler Distribution Module – ND70081 – 66270
- A100 Sampler Module, mounted on the A111.
- A101 Sampler Module, mounted on the A111.
- A102 Sampler Module, mounted on the A111.
- A103 Sampler Module, mounted on the A111
- A130 LO Coupler Module, if present, mounted on the A100 or A101.

RF Deck Top Side Right Modules

These modules are described in Section 11-4 “RF Deck Top Side Right Modules” on page 11-5 above:

- A113 5-20 GHz Doubler Module – ND70080 – 64920
- A115 Low Band Transfer Switch – ND70079 – 64690
- A116 Low Band Bridge – ND70078 – 64016
- A117 Low Band Bridge – ND70078 – 64016

Figure 11-4. MS4640A - RF Deck Top Side Rear Attenuators - Option 062 (2 of 2)

11-8 RF Deck Bottom Side A18 Modules and PCB

These modules are located within or on the A18 RF Control PCB Assembly and are located on the RF Deck Bottom Side. The modules and the A18 PCB can be serviced while the RF Deck remains in the instrument chassis. The detailed procedures are covered in Chapter 12, "RF Deck Bottom Side A18 Modules and PCB" below.

A18 PCB Module Combinations

The modules in the A18 PCB area vary depending on the instrument model as shown in Table 11-1 below. Note that the A112 Switched Doubler Module and A114 Switched Quadrupler Module have an attached signal/power harness for connection to the A18 RF Control PCB Assembly.

Table 11-1. RF Deck A18 PCB Modules by Instrument Model Number

Engineering Reference Number	Module Name Replacement and Anritsu Part Numbers	Equipped in this VectorStar Model?			
		MS4642A 20 GHz VNAs	MS4644A 40 GHz VNAs	MS4645A 50 GHz VNAs	MS4647A 70 GHz VNAs
A18 PCB	A18 RF Control PCB Assembly (A18 PCB) ND70068 – 61929-3	**YES**	**YES**	**YES**	**YES**
A108 HBTS	A108 High Band Transfer Switch (A108 HBTS), 40 GHz ND70092 – 66221 *If referring to both the HBTS above and the VITS below, the designator reads "A108 HBTS/VITS.*	**YES**	**YES**	NO	NO
A108 VITS	A108 V Integrated High Band Transfer Switch (A108 VITS), 70 GHz ND70093 – 66619	NO	NO	**YES**	**YES**
A112 SDM	A112 Switched Doubler Module (A112 SDM) ND70098 – 59772	NO	**YES**	**YES**	**YES**
A114 SQM	A114 Switched Quadrupler Module (A114 SQM) ND70099 – 60-327	NO	NO	**YES**	**YES**

Each major configuration is described in the following three sections.

11-9 MS4642A A18 Modules and PCB

The MS4642A is equipped with just the A18 PCB and the A108 HBTS:

- MS4642A: A108 High Band Transfer Switch (A108 HBTS), 40 GHz – ND70092 – 66221
- MS4642A: A18 RF Control PCB Assembly – ND70068 – 61929-3

In Figure 11-1 below, the location of the A108 module and A18 PCB are shown. Note the two (2) semi-rigid coaxial linking the A108 HBTS and the front port groups. To service the connected port groups, the A108 HBTS and the two cables must be carefully removed by following the procedures in Chapter 12, "RF Deck Bottom Side A18 Modules and PCB":

- Section 12-9 "Remove A108 HBTS/VITS Module – ND70092 or ND70093" on page 12-16
- Section 12-10 "Prepare Replacement A108 HBTS/VITS" on page 12-20
- Section 12-11 "Install A108 HBTS/VITS – ND70092 or ND70093" on page 12-20

To remove the A18 RF Control PCB Assembly, the basic procedure is to remove all the modules mounted on or within the PCB, disconnect all attached cable harnesses, and remove any semi-rigid coaxial cables. Once the PCB is clear, the next step is to remove the PCB-to-chassis mounting hardware and then remove the PCB.

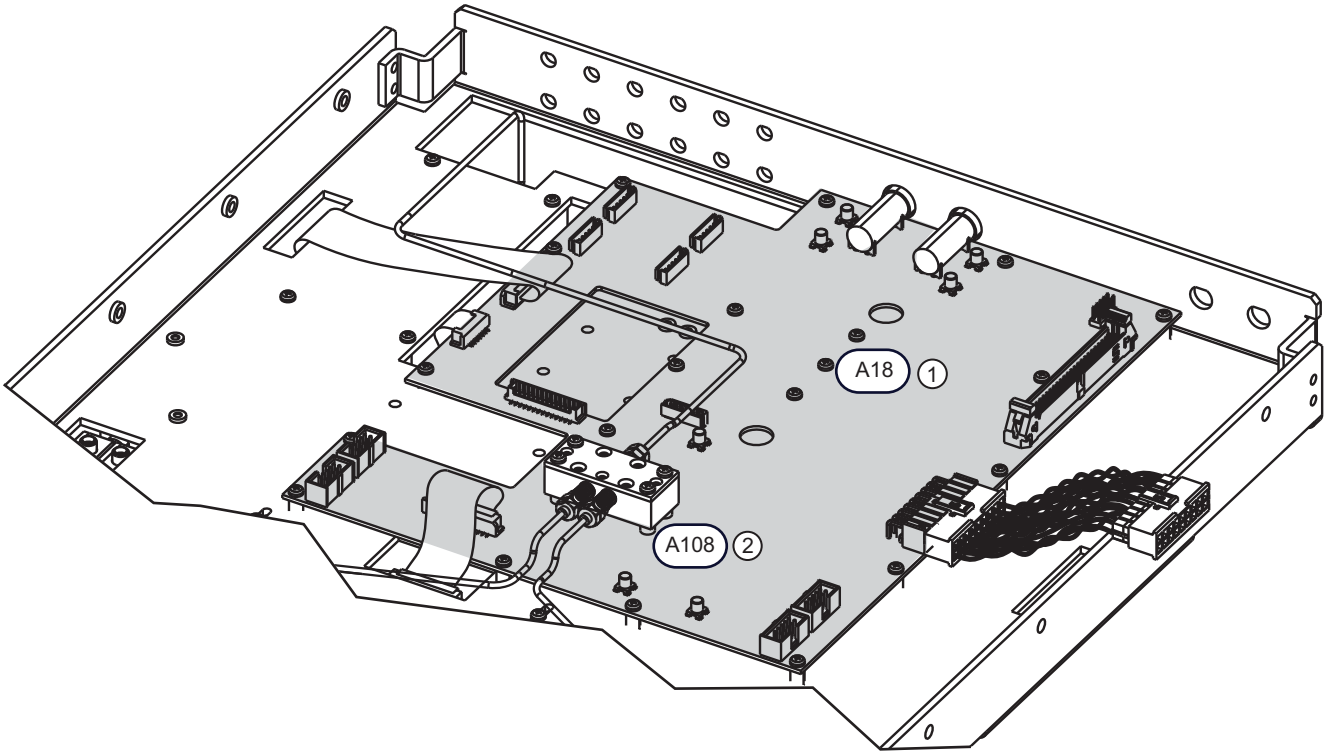

RF Deck In

The A108 HBTS and the A18 PCB are replaceable while the RF Deck remains in the instrument chassis.

Module

- A108 High Band Transfer Switch, 40 GHz (A108 HBTS) – ND70092 – 66221

PCB

- A18 RF Control PCB Assembly – ND70068 – 61929-3

Figure 11-5. MS4642A 20 GHz VNA - RF Deck Bottom Side - A18 Modules and PCB

11-10 MS4644A A18 Modules and PCB

The MS4644A equipped with the A18 PCB, A108 HBTS, and the A112 SDM:

- MS4644A: A112 Switched Doubler Module (A112 SDM) – ND70098 – 59772
- MS4644A: A108 High Band Transfer Switch (A108 HBTS), 40 GHz – ND70092 – 66221
- MS4642A: A18 RF Control PCB Assembly – ND70068 – 61929-3

The figure below (Figure 11-6) shows the location of the module and PCB. Note the two (2) semi-rigid coaxial cables linking the A108 HBTS and the front port groups. To service the connected port groups, the A108 HBTS and the two cables must be carefully removed by following the procedures in Chapter 12, "RF Deck Bottom Side A18 Modules and PCB":

- Section 12-9 "Remove A108 HBTS/VITS Module – ND70092 or ND70093" on page 12-16
- Section 12-10 "Prepare Replacement A108 HBTS/VITS" on page 12-20
- Section 12-11 "Install A108 HBTS/VITS – ND70092 or ND70093" on page 12-20

To remove the A18 RF Control PCB Assembly, the basic procedure is to remove all the modules mounted on or within the PCB, disconnect all attached cable harnesses, and remove any semi-rigid coaxial cables. Once the PCB is clear, the next step is to remove the PCB-to-chassis mounting hardware and then remove the PCB.

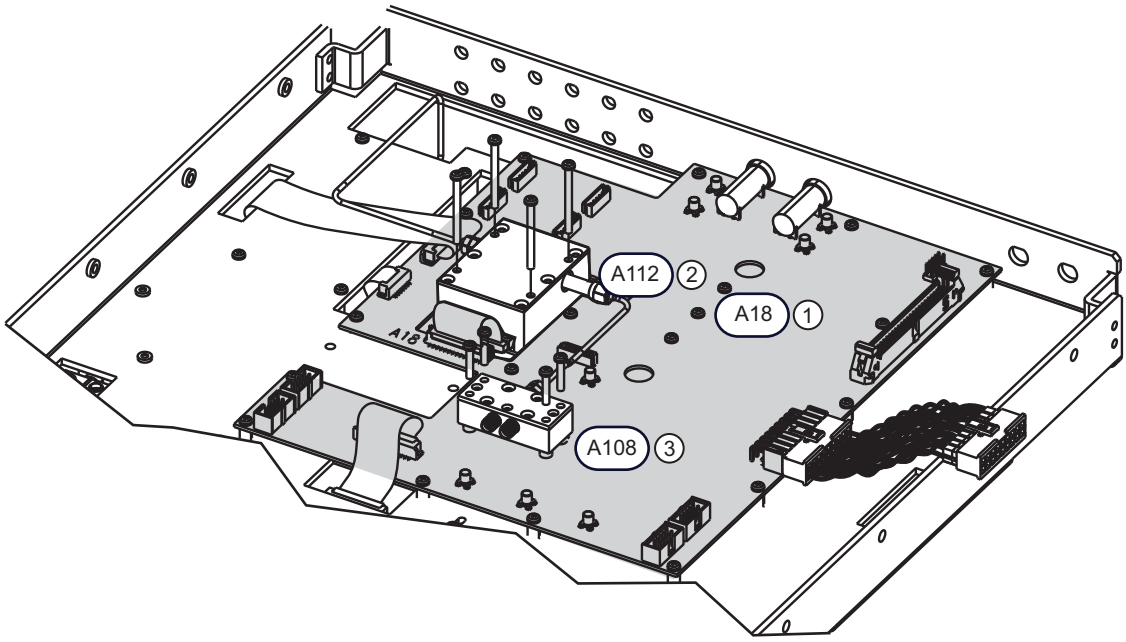

RF Deck In

The A108 HBTS, A112 SDM, and the A18 PCB are replaceable while the RF Deck remains in the instrument chassis.

Modules

- A112 Switched Doubler Module (A112 SDM) – ND70098 – 59772
- A108 High Band Transfer Switch, 40 GHz (A108 HBTS) – ND70092 – 66221

PCB

- A18 RF Control PCB Assembly – ND70068 – 61929-3

Figure 11-6. MS4644A 40 GHz VNA - RF Deck Bottom Side - A18 Modules and PCB

11-11 MS4645A / MS4647A A18 Modules and PCB

The MS4645A / MS4647A VNAs are equipped with the A18 PCB, A108 VITS, A114 SQM, and the A112 SDM:

- MS4645A / MS4647A: A112 Switched Doubler Module (A112 SDM) – ND70098 – 59772
- MS4645A / MS4647A: A108 V Integrated High Band Transfer Switch (A108 VITS), 70 GHz – ND70093 – 66619
- MS4645A / MS4647A: A114 Switched Quadrupler Module (A114 SQM) – ND70099 – 60-327
- MS4645A / MS4547A: A18 RF Control PCB Assembly – ND70068 – 61929-3

The figure below (Figure 11-7) shows the location of the module and PCB. Note the two (2) semi-rigid coaxial linking the A108 VITS and the front port groups. To service the connected port groups, the A108 VITS and the two cables must be carefully removed by following the procedures in Chapter 12, “RF Deck Bottom Side A18 Modules and PCB”:

- Section 12-9 “Remove A108 HBTS/VITS Module – ND70092 or ND70093” on page 12-16
- Section 12-10 “Prepare Replacement A108 HBTS/VITS” on page 12-20
- Section 12-11 “Install A108 HBTS/VITS – ND70092 or ND70093” on page 12-20

To remove the A18 RF Control PCB Assembly, the basic procedure is to remove all the modules mounted on or within the PCB, disconnect all attached cable harnesses, and remove any semi-rigid coaxial cables. Once the PCB is clear, the next step is to remove the PCB-to-chassis mounting hardware and then remove the PCB.

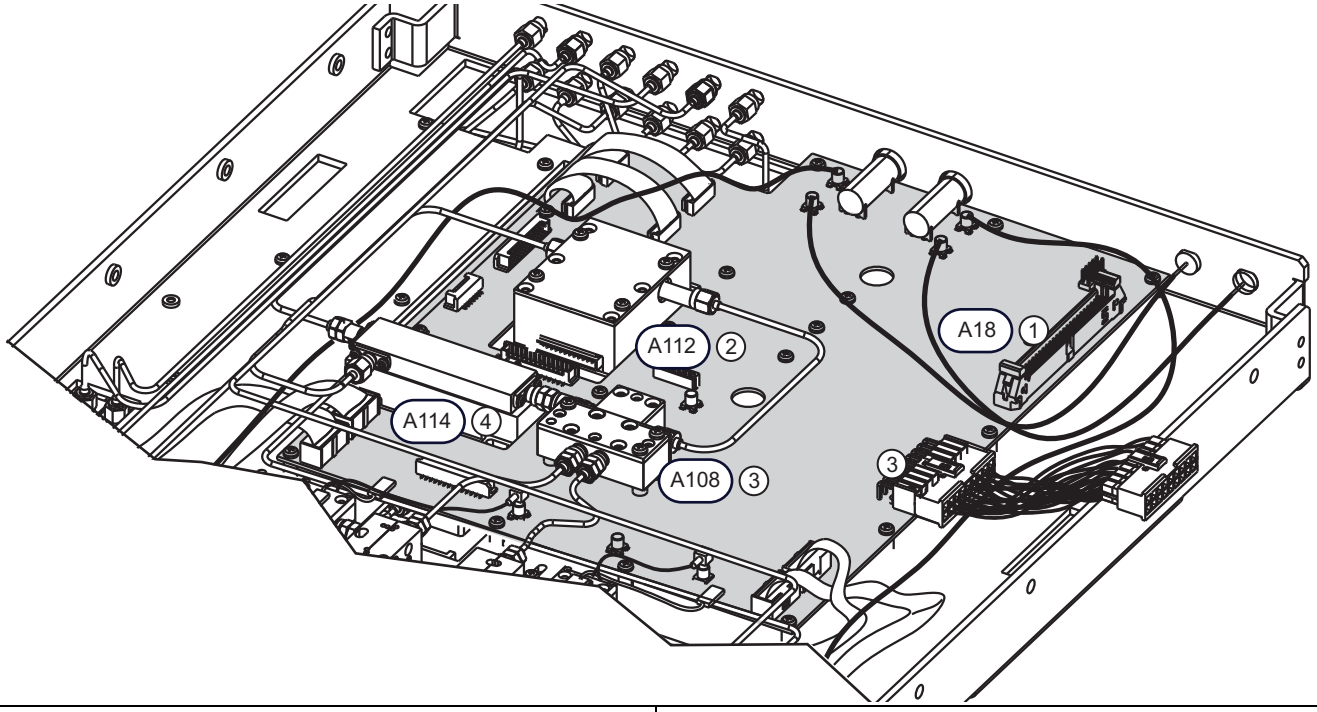

RF Deck In	Modules
The A108 VITS, A112 SDM, the A114 SQM and the A18 PCB are replaceable while the RF Deck remains in the instrument chassis. **PCB** A18 RF Control PCB Assembly – ND70068 – 61929-3	• A112 Switched Doubler Module (A112 SDM) – ND70098 – 59772 • A114 Switched Quadrupler Module (A114 SQM) – ND70099 – 60-327 • A108 V Integrated High Band Transfer Switch (A108 VITS), 70 GHz – ND70093 – 66619

Figure 11-7. MS4645A / MS4647A VNAs - RF Deck Bottom Side - A18 Modules and PCB

11-12 RF Deck Bottom Side - A18 RF Control PCB Assembly

The A18 PCB is the same for all instrument models with any combination of options. In general, the only reason to remove the PCB is to replace it. The basic removal process is to remove all of the modules located within it or on it, remove any obstructing semi-rigid coaxial cables, and finally remove all signal/power cables. When ready, remove the mounting hardware and lift out the PCB. The detailed procedure is described in Chapter 12, “RF Deck Bottom Side A18 Modules and PCB” and Section 12-15 “Remove A18 RF Control PCB – ND70068 – 61929-3” on page 12-24.

11-13 RF Deck Bottom Side Port Group Modules

Port Group Modules Introduction

These modules are all located on the RF Deck Bottom Side and are members of a “port group”. A port group consists of one or more modules located to support a front panel port. The port groups are located on the RF Deck Bottom Side between the front edge of the A18 RF Control PCB Assembly and the RF Deck Front Panel. A port group can vary from one to seven modules. The port assignment and the port group components vary depending on:

- The instrument model
- The installed option
- The port number

The detailed procedures for these modules is covered in Chapter 13, “RF Deck Bottom Side Port Modules”. All port group modules can be replaced while the RF Deck remains in the instrument. Please read the descriptions below before attempting to service any port group module.

RF Deck Chassis

The RF Deck and Chassis Assembly itself is not a replaceable part. Only its attached modules and circuit board are replaceable.

Note	In the RF Deck area, many modules have one Engineering Reference “A” Number but can have two (2) separate Replacement/Anritsu Part Numbers depending on the instrument model and/or installed option. For example, the A108 Engineering Reference can refer to either the High Band Transfer Switch (HBTS), 40 GHz – ND70092 – 66221 or the V Integrated Switch (VIS), 70 GHz – ND70093 – 66619. This distinction is described whenever one Engineering Reference can represent multiple parts.

Ports by Instrument Model and Equipped Option

Caution	Removing the A108 High Band Transfer Switch (A108 HBTS) in the MS4642A / MS4644A or the A108 V Integrated Switch High Band Transfer Switch (A108 VITS) in the MS4645A / MS4647A must be done before servicing port module groups that are connected to it. The basic procedure MUST be followed in sequence to avoid damaging the attached semi-rigid coaxial cables and the pins on the underside of the A108 HBTS/VITS.

As shown in Table 11-2 below, the number of equipped ports varies by instrument model and option. In the table, please note that:

- Not all ports have replacement parts. These ports are listed in *italics*.
- The number of modules in a port group varies from one (1) to five (5) modules.
- Special procedures MUST be observed for port groups connected to the A108 HBTS on the MS4644A or to the A108 VITS on the MS4645A / MS4647A.

Table 11-2. Port Module Groups by Instrument Model and Equipped Option (1 of 3)

Model	Standard No Options	Option 051 Loops	Option 061 Loops and Two Attenuators	Option 062 Loops and Four Attenuators
Notes:	Ports with no replacement modules are shown in *italic.* The number of modules in each port module group is shown below each port group. For MS4642A / MS4644A: If the port group connects to the A18 PCB and the A108 High Band Transfer Switch Module – ND70092 – 66221, it is listed as the A108 HBTS. For MS4645A / MS4647A: If the port module group connects to the A18 PCB and the A108 V Integrated High Band Transfer Switch – ND70093, it is listed as the A108 VITS.			
MS4642A 20 GHz, K Connectors	Test Port 2 5 modules Connected to A108 HBTS	*Port 2 b21*	Port 2 b2 1 module	Port 2 b2 1 module
		Port 2 a2	*Port 2 a2*	*Port 2 a2*
		Test Port 2 3 modules	Test Port 2 3 modules	Test Port 2 3 modules
		Port 2 Source 2 modules Connected to A108 HBTS	Port 2 Source 2 modules Connected to A108 HBTS	Port 2 Source 3 modules Connected to A108 HBTS
	Test Port 1 5 modules Connected to A108 HBTS	Port 1 Source 2 modules Connected to A108 HBTS	Port 1 Source 3 modules Connected to A108 HBTS	Port 1 Source 3 modules Connected to A108 HBTS
		Test Port 1 3 modules	Test Port 1 3 modules	Test Port 1 3 modules
		Port 1 a1	*Port 1 a1*	*Port 1 a1*
		Port 1 b1	Port 1 b1 1 module	Port 1 b1 1 module

Table 11-2. Port Module Groups by Instrument Model and Equipped Option (2 of 3)

Model	Standard No Options	Option 051 Loops	Option 061 Loops and Two Attenuators	Option 062 Loops and Four Attenuators
Notes:	Ports with no replacement modules are shown in *italic.* The number of modules in each port module group is shown below each port group. For MS4642A / MS4644A: If the port group connects to the A18 PCB and the A108 High Band Transfer Switch Module – ND70092 – 66221, it is listed as the A108 HBTS. For MS4645A / MS4647A: If the port module group connects to the A18 PCB and the A108 V Integrated High Band Transfer Switch – ND70093, it is listed as the A108 VITS.			
MS4644A 40 GHz, K Connectors	Test Port 2 5 modules Connected to the A108 HBTS	*Port 2 b2*	Port 2 b2 1 module	Port 2 b2 1 module
		Port 2 a2	*Port 2 a2*	*Port 2 a2*
		Test Port 2 3 modules	Test Port 2 3 modules	Test Port 2 3 modules
		Port 2 Source 2 modules Connected to the A108 HBTS	Port 2 Source 2 modules Connected to the A108 HBTS	Port 2 Source 2 modules Connected to the A108 HBTS
	Test Port 1 5 modules Connected to the A108 HBTS †	Port 1 Source 2 modules Connected to the A108 HBTS	Port 1 Source 3 modules Connected to the A108 HBTS	Port 1 Source 3 modules Connected to the A108 HBTS
		Test Port 1 3 modules	Test Port 1 3 modules	Test Port 1 3 modules
		Port 1 a1	*Port 1 a1*	*Port 1 a1*
		Port 1 b1	*Port 1 b1*	Port 1 b1 3 modules

Table 11-2. Port Module Groups by Instrument Model and Equipped Option (3 of 3)

Model	Standard No Options	Option 051 Loops	Option 061 Loops and Two Attenuators	Option 062 Loops and Four Attenuators
Notes:	Ports with no replacement modules are shown in *italic.* The number of modules in each port module group is shown below each port group. For MS4642A / MS4644A: If the port group connects to the A18 PCB and the A108 High Band Transfer Switch Module – ND70092 – 66221, it is listed as the A108 HBTS. For MS4645A / MS4647A: If the port module group connects to the A18 PCB and the A108 V Integrated High Band Transfer Switch – ND70093, it is listed as the A108 VITS.			
MS4645A 50 GHz / MS4647A 70 GHz, V Connectors	Test Port 2 5 modules Connected to the A108 VITS	*Port 2 b2*	Port 2 b2 (2)	Port 2 b2 1 module
		Port 2 a2	*Port 2 a2*	*Port 2 a2*
		Test Port 2 3 modules	Test Port 2 3 modules	Test Port 2 3 modules
		Port 2 Source 2 modules Connected to the A108 VITS	Port 2 Source 2 modules Connected to the A108 VITS	Port 2 Source 3 modules Connected to the A108 VITS
	Test Port 1 5 modules Connected to the A108 VITS	Port 1 Source 2 modules Connected to the A108 VITS	Port 1 Source 3 modules Connected to the A108 VITS	Port 1 Source 3 modules Connected to the A108 VITS
		Test Port 1 3 modules)	Test Port 1 3 modules	Test Port 1 3 modules
		Port 1 a1	*Port 1 a1*	*Port 1 a1*
		Port 1 b1	*Port 1 b1*	Port 1 b1 1 module

Port Group Module Notes

Keep the following in mind when planning to replace parts located on the RF Deck Bottom Side.

- The RF Deck Bottom Side port modules are those located between the front edge of the A18 PCB and the RF Deck Front Panel.
- The modules vary depending on the instrument model, the equipped option, and the test port.
- Each combination is identified here as a **Module Group**.
- Depending on the instrument, option, and port, each port module group can contain from one (1) to as many as five (5) modules.
- Accessing some of the module groups requires:
  - Loosening the mechanical and electrical connections in the entire module group.
  - Removing the connections between the A18 PCB modules (A108 HBTS/VITS and, depending on the instrument model, possibly A114 and/or A112).
  - Lifting the A108 HBTS/VITS and its underlying mounting pins clear of its sockets on the A18 PCB.
  - Disconnecting the semi-rigid coaxial cables between the A108 HBTS/VITS and the desired module group.

  - Disassembling the module group, generally by starting with the module closest to the A18 PCB and then working towards the front panel, removing each module in turn, until the to-be-replaced module is accesses and then removed.
  - After replacement, the reassembly process is the reverse where the module group is built-up working from the front panel towards the A18 PCB.
  - Make the semi-rigid coaxial connections to the A108 HBTS/VITS.
  - Install the A108 HBTS/VITS into the A18 PCB.
  - In the specified sequence, tighten up the mechanical and electrical connections in the module group.
  - Install and tighten the removed semi-rigid coaxial and signal/power cables on the A18 PCB.
- As shown in Table 11-2 above, the Ports in the RF Chassis vary primarily with the equipped option.
- In general, the MS4642A and MS4644A modules are electrically and mechanically the same.
- Also, in general, the MS4645A and MS4647A modules are electrically and mechanically the same.
- The RF Connectors between the modules are mechanically identical and all use 5/16” plain or 8 lbf · in torque end wrenches. The mounting methods, support brackets, and fastening hardware are the same for all models.
- Looking at the RF Deck upside down, from the front, the eight (8) possible ports, from left to right are (with Abbreviation and Full Name):
  - P2 b2 – Port 2 Test Receiver b2
  - P2 a2 – Port 2 Reference Receiver a2
  - TP2 – Test Port 2
  - P2 Src – Port 2 Source
  - P1 Src – Port 1 Source
  - TP1 – Test Port 1
  - P1 a1 – Port 1 Reference Receiver a1
  - P1 b1 – Port 1 Test Receiver b1

Port Group Reference Figures

The figures below show the port module configuration for most VNA RF Deck permutations.

- Figure 11-8, “MS4642A - Standard No Options - RF Deck Bottom Side - Port Group Modules” on page 11-21
- Figure 11-9, “MS4644A - Standard No Options - RF Deck Bottom Side - Port Group Modules” on page 11-23
- Figure 11-10, “MS4645A/MS4647A - Standard - RF Deck Bottom Side - Port Group Modules” on page 11-25
- Figure 11-11, “MS4645A / MS4647A - Option 051 - RF Deck Bottom Side - Port Group Modules” on page 11-27
- Figure 11-12, “MS4645A / MS4647A - Option 061 - RF Deck Bottom Side - Port Group Modules” on page 11-29
- Figure 11-13, “MS4645A / MS4647A - Option 062 - RF Deck Bottom Side - Port Group Modules” on page 11-31

MS4642A – Standard No Options

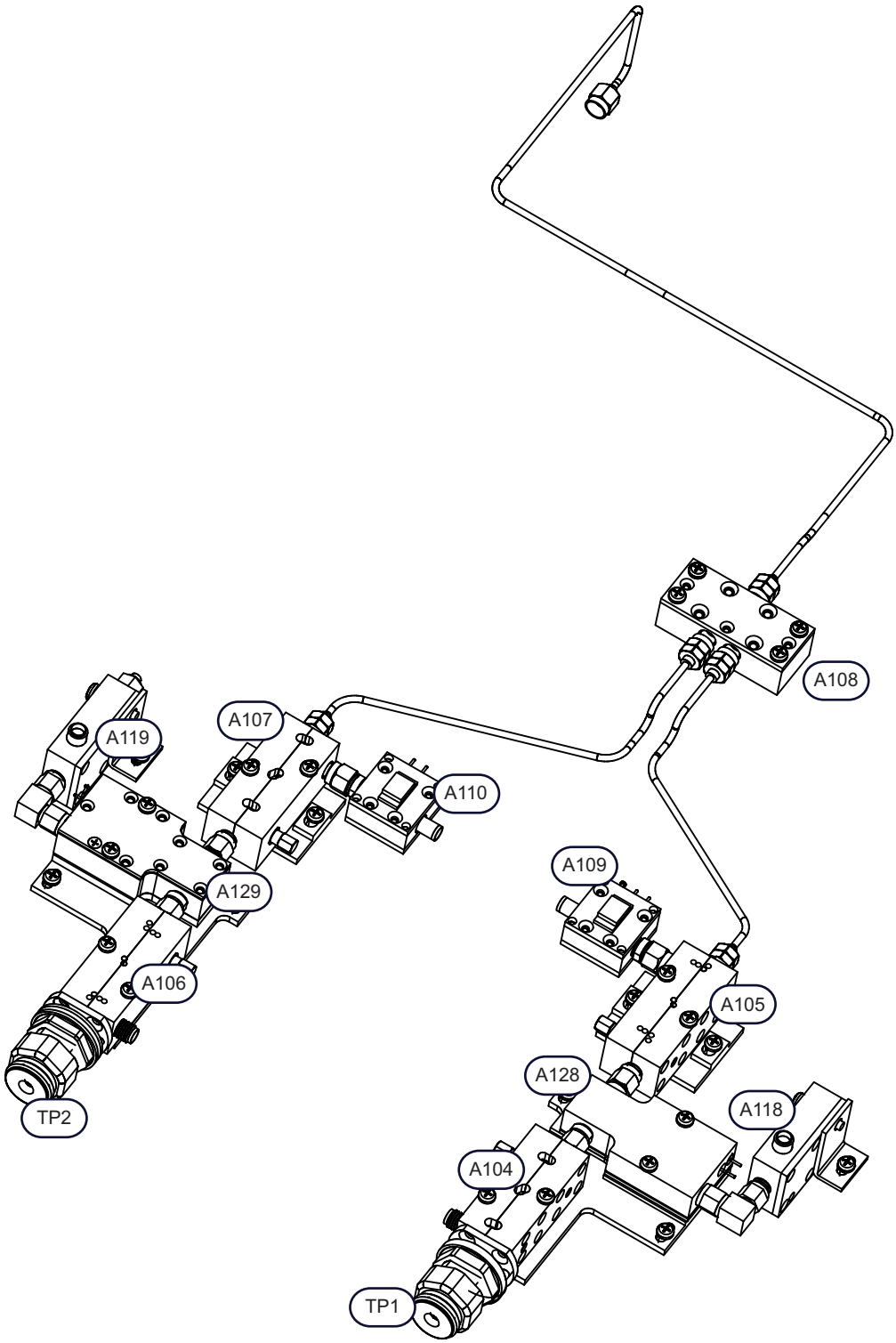

Figure 11-8. MS4642A - Standard No Options - RF Deck Bottom Side - Port Group Modules (1 of 2)

Test Ports (from left to right) • TP2 – Test Port 2 • TP1 – Test Port 1 **RF Control Module** • A108 – High Band Transfer Switch, 40 GHz – ND70092 – 66221 • Mounted on the A18 RF Control PCB Assembly (not shown) **Test Port 2** • A107 – Reference Coupler, 40 GHz – No ND – 66487 • A110 – Port 2 Level Detector, 40 GHz, K Connector – ND70094 – 67417-1 • A129 – Diplexer/Bias Tee Module, Port 2, 40 GHz – ND70089 – 66465 or ND73941 – 74277 • A119 – Low Band Bridge – ND70078 – 64016 • A106 – Test Coupler, 40 GHz – No ND – 66480 • Test Port Adapter K Connector – No ND – 34YK50C	**Test Port 1** • A105 – Reference Coupler, 40 GHz – No ND – 66487 • A109 – Port 1 Level Detector, 40 GHz, K Connector – ND72124 – 67417-1 • A118 – Low Band Bridge – ND70078 – 64016 • A128 – Diplexer/Bias Tee Module, Port 1, 40 GHz – ND70088 – 66465 or ND73940 - 74277 • A104 – Test Coupler, 40 GHz – No ND – 66480 • Test Port Adapter K Connector – No ND – 34YK50C

Figure 11-8. MS4642A - Standard No Options - RF Deck Bottom Side - Port Group Modules (2 of 2)

MS4644A – Standard No Options

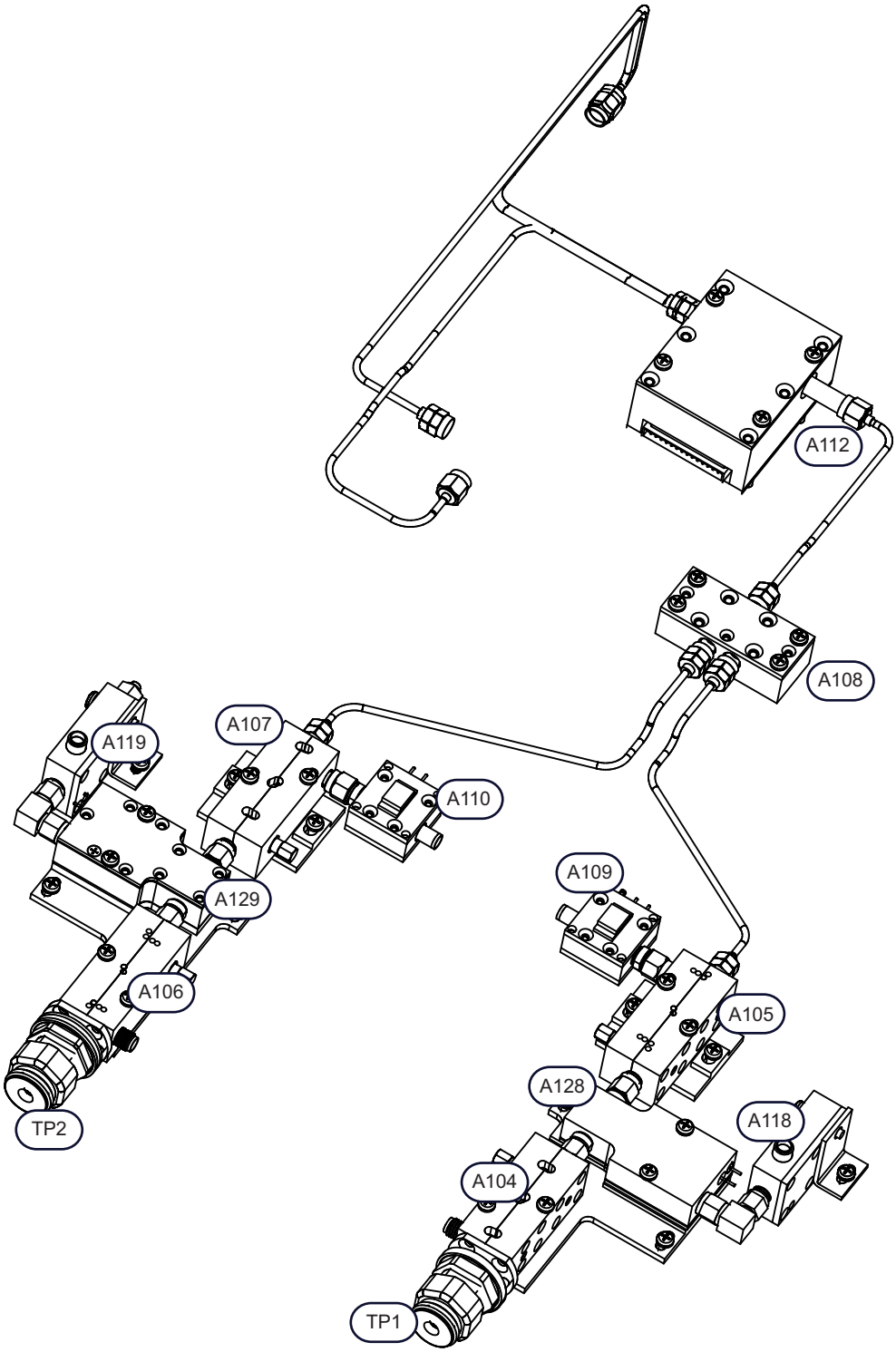

Figure 11-9. MS4644A - Standard No Options - RF Deck Bottom Side - Port Group Modules (1 of 2)

Test Ports (from left to right) • TP2 – Test Port 2 • TP1 – Test Port 1 **RF Control Modules** All are mounted on the A18 RF Control PCB Assembly (not shown): • A112 – Switched Doubler Module – ND70098 – 59775 • A108 – High Band Transfer Switch, 40 GHz – ND70092 – 66221 **Test Port 2** • A107 – Reference Coupler, 40 GHz – No ND – 66487 • A110 – Port 2 Level Detector, K Connector, 40 GHz – ND70094 – 67417-1 • A129 – Diplexer/Bias Tee Module, Port 2, 40 GHz – ND70089 – 66465 or ND73941 – 74277 • A119 – Low Band Bridge – ND70078 – 64016 • A106 – Test Coupler, 40 GHz – No ND – 66480 • Test Port Adapter K Connector – No ND – 34YK50C	**Test Port 1** • A105 – Reference Coupler, 40 GHz – No ND – 66487 • A109 – Port 1 Level Detector, K Connector, 40 GHz – ND70095 – 67417-2 • A128 – Diplexer/Bias Tee Module, Port 1, 40 GHz – ND70088 – 66465 or ND73940 - 74277 • A118 – Low Band Bridge – ND70078 – 64016 • A104 – Test Coupler, 40 GHz – No ND – 66480 • Test Port Adapter K Connector – No ND – 34YK50C

Figure 11-9. MS4644A - Standard No Options - RF Deck Bottom Side - Port Group Modules (2 of 2)

MS4645A / MS4647A – Standard No Options

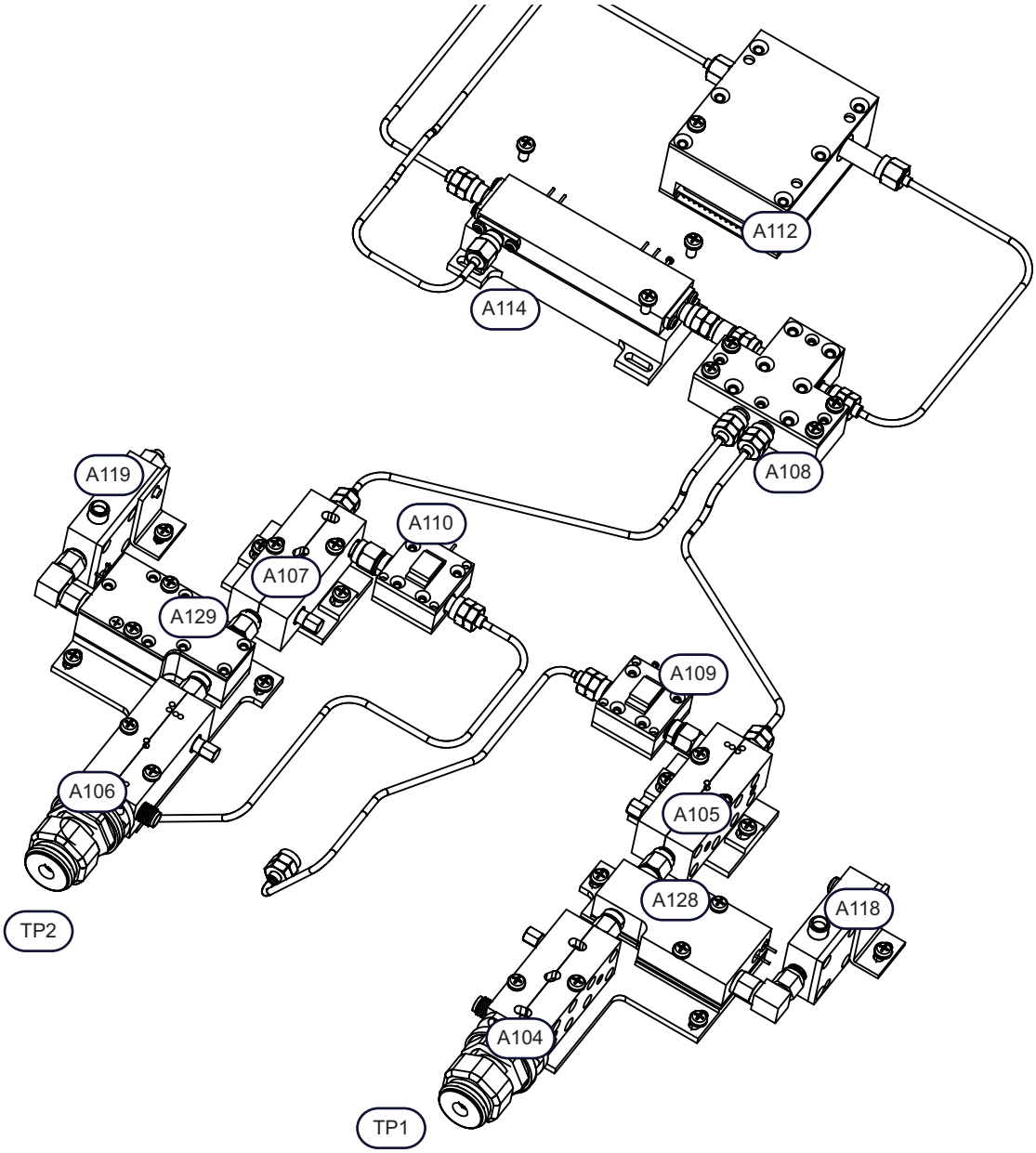

Figure 11-10. MS4645A/MS4647A - Standard - RF Deck Bottom Side - Port Group Modules (1 of 2)

Standard • Standard No Options **Test Ports (from left to right)** • TP2 – Test Port 2 • TP1 – Test Port 1 **RF Control Modules** All are mounted on the A18 RF Control PCB Assembly (not shown) • A112 – Switched Doubler Module – ND70098 – 59775 • A108 – V Integrated Switch – ND70093 – 66619 • A114 – Switched Quadrupler Module – ND70099 – 60-327 **Test Port 2** • A107 – Reference Coupler, 70 GHz – No ND – 65270 • A110 – Port 2 Level Detector, V Connector, 70 GHz – ND70096 – 67389-1 • A129 – Diplexer/Bias Tee Module, Port 2, 70 GHz – ND73943 - 74278 • A119 – Low Band Bridge – ND70078 – 64016 • A106 – Test Coupler, V Connector, 70 GHz – No ND – 66245 • Test Port Adapter V Connector – No ND – 34YV50C	**Test Port 1** • A105 – Reference Coupler 70 GHz – No ND – 65270 • A109 – Port 1 Level Detector, V Connector, 70 GHz – ND70097 – 67389-2 • A128 – Diplexer/Bias Tee Module, Port 1, 70 GHz – ND73942 - 74278 • A118 – Low Band Bridge – ND70078 – 64016 • A104 – Test Coupler, V Connector, 70 GHz – No ND – 66245 • Test Port Adapter V Connector – No ND – 34YV50C

Figure 11-10. MS4645A/MS4647A - Standard - RF Deck Bottom Side - Port Group Modules (2 of 2)

MS4645A / MS4647A – Option 051 – Front Panel Loops

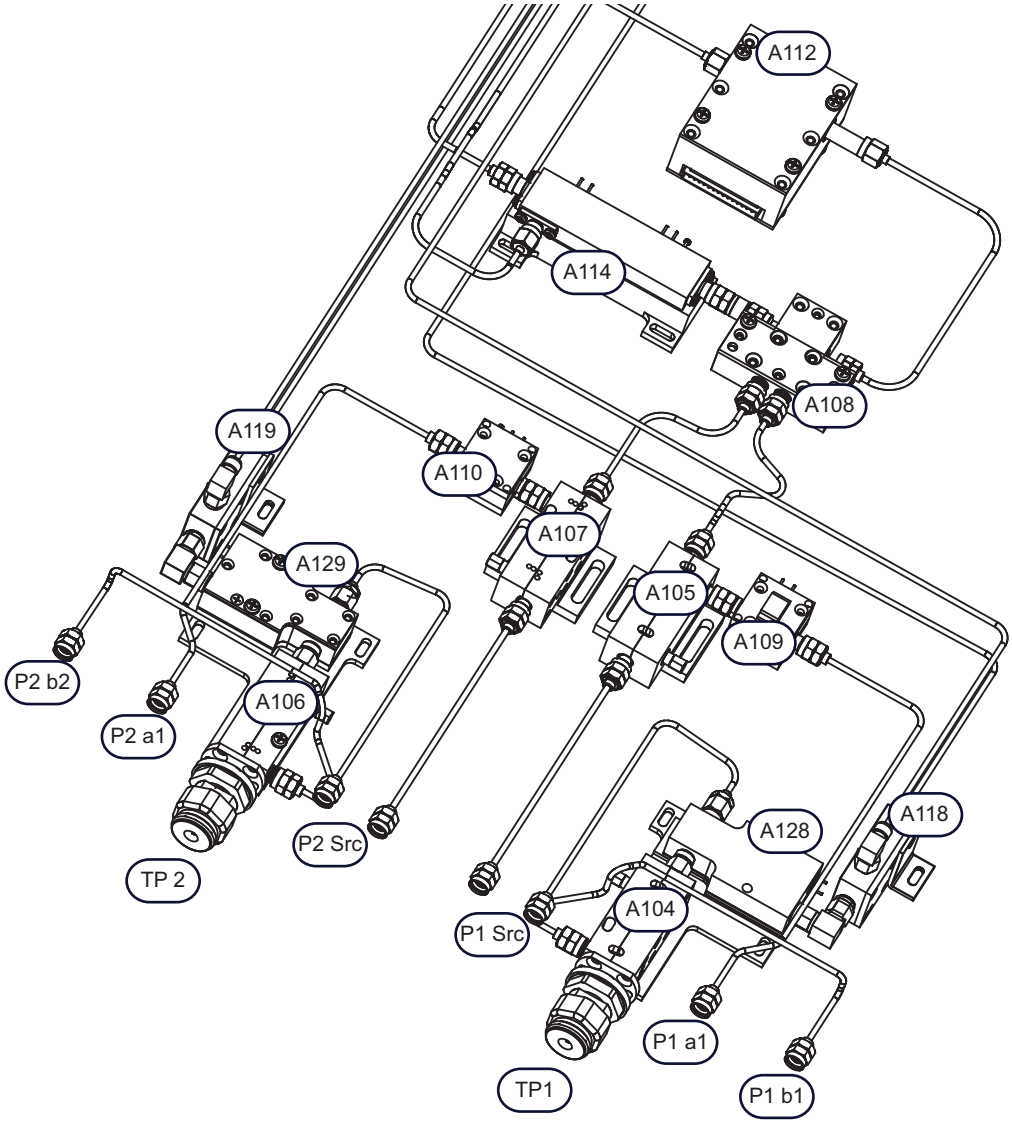

Figure 11-11. MS4645A / MS4647A - Option 051 - RF Deck Bottom Side - Port Group Modules (1 of 2)

Test Ports (from left to right)
- P2 b2 – Port 2 Test Receiver b2 – There are no modules connected directly to Port 2 b2.
- P2 a2 – Port 2 Reference Receiver a2 – There are no modules connected directly to Port 2 a2.
- TP2 – Test Port 2
- P2 Src – Port 2 Source
- P1 Src – Port 1 Source
- TP1 – Test Port 1
- P1 a1 – Port 1 Reference Receiver a1 – There are no modules connected directly to Port 1 a1.
- P1 b1 – Port 1 Test Receiver b1 – There are no modules connected directly to Port 2 b1.

RF Control Modules

All are mounted on the A18 RF Control PCB Assembly (not shown)
- A112 – Switched Doubler Module – ND70098 – 59775
- A108 – V Integrated Switch – ND70093 – 66619
- A114 – Switched Quadrupler Module – ND70099 – 60-327

Test Port 2
- A119 – Low Band Bridge – ND70078 – 64016
- A129 – Diplexer/Bias Tee Module, Port 2, 70 GHz – ND73943 – 74278
- A106 – Test Coupler, V Connector, 70 GHz – No ND – 66245
- Test Port Adapter V Connector – No ND – 34YV50C

Port 2 Source
- A107 – Reference Coupler, 70 GHz – No ND – 65270
- A110 – Port 2 Level Detector, V Connector, 70 GHz – ND72127 – 67389-2

Port 1 Source
- A105 – Reference Coupler 70 GHz – No ND – 65270
- A109 – Port 1 Level Detector, V Connector, 70 GHz – ND72126 – 67389-1

Test Port 1
- A118 – Low Band Bridge – ND70078 – 64016
- A128 – Diplexer/Bias Tee Module, Port 1, 70 GHz – ND73942 – 74278
- A104 – Test Coupler, V Connector, 70 GHz – No ND – 66245
- Test Port Adapter V Connector – No ND – 34YV50C

Figure 11-11. MS4645A / MS4647A - Option 051 - RF Deck Bottom Side - Port Group Modules (2 of 2)

MS4645A / MS4647A – Option 061 – Loops and Two Attenuators

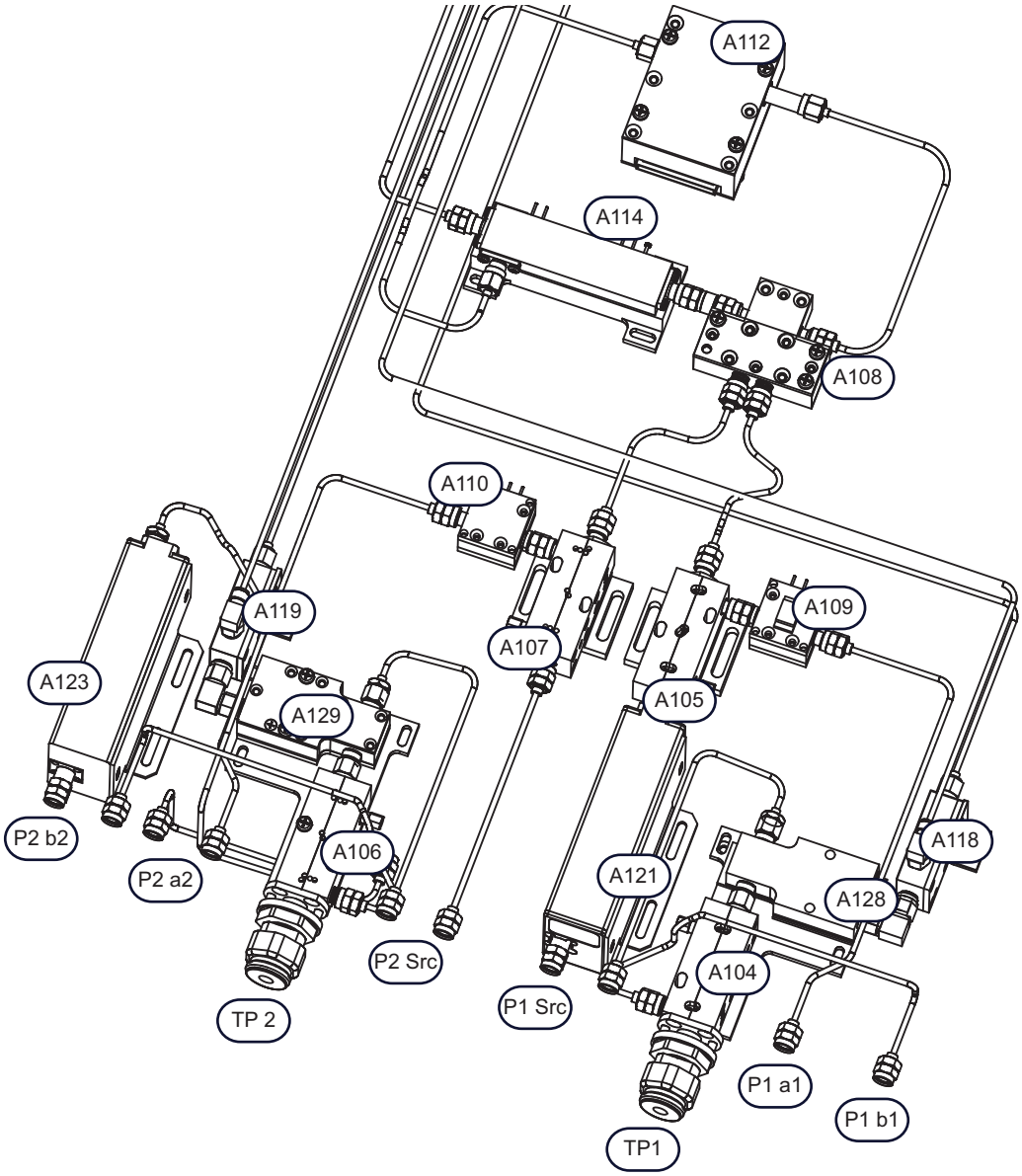

Figure 11-12. MS4645A / MS4647A - Option 061 - RF Deck Bottom Side - Port Group Modules (1 of 2)

Test Ports (from left to right)
- P2 b2 – Port 2 Test Receiver b2
- P2 a2 – Port 2 Reference Receiver a2 – There are no modules connected directly to Port 2 a2.
- TP2 – Test Port 2
- P2 Src – Port 2 Source
- P1 Src – Port 1 Source
- TP1 – Test Port 1
- P1 a1 – Port 1 Reference Receiver a1 – There are no modules connected directly to Port 1 a1.
- P1 b1 – Port 1 Test Receiver b1

RF Control Modules

All are mounted on the A18 RF Control PCB Assembly (not shown)
- A112 – Switched Doubler Module – ND70098 – 59775
- A108 – V Integrated Switch – ND70093 – 66619
- A114 – Switched Quadrupler Module – ND70099 – 60-327

Port 2 Test Receiver b2
- A123 – High Band Step Attenuator, V Connector – No ND – 66050

Test Port 2
- A106 – Test Coupler, V Connector, 70 GHz – No ND – 66245
- A129 – Diplexer/Bias Tee Module, Port 2, 70 GHz – ND73943 - 74278
- A119 – Low Band Bridge – ND70078 – 64016

Port 2 Source
- A107 – Reference Coupler, 70 GHz – No ND – 65270
- A110 – Port 2 Level Detector, V Connector, 70 GHz – ND72127 - 67389-2

Port 1 Source
- A105 – Reference Coupler 70 GHz – No ND – 65270
- A109 – A109 Port 1 Level Detector, V Connector, 70 GHz – ND72126 – 67389-1

Test Port 1
- A104 – Test Coupler, V Connector, 70 GHz – No ND – 66245
- A128 – Diplexer/Bias Tee Module, Port 1, 70 GHz – ND73942 – 74278.
- A118 – Low Band Bridge – ND70078 – 64016

Port 1 Test Receiver b1
- A120 – High Band Step Attenuator, V Connector – No ND – 66050

Figure 11-12. MS4645A / MS4647A - Option 061 - RF Deck Bottom Side - Port Group Modules (2 of 2)

MS4645A / MS4647A Option 062 – Loops and Four Attenuators

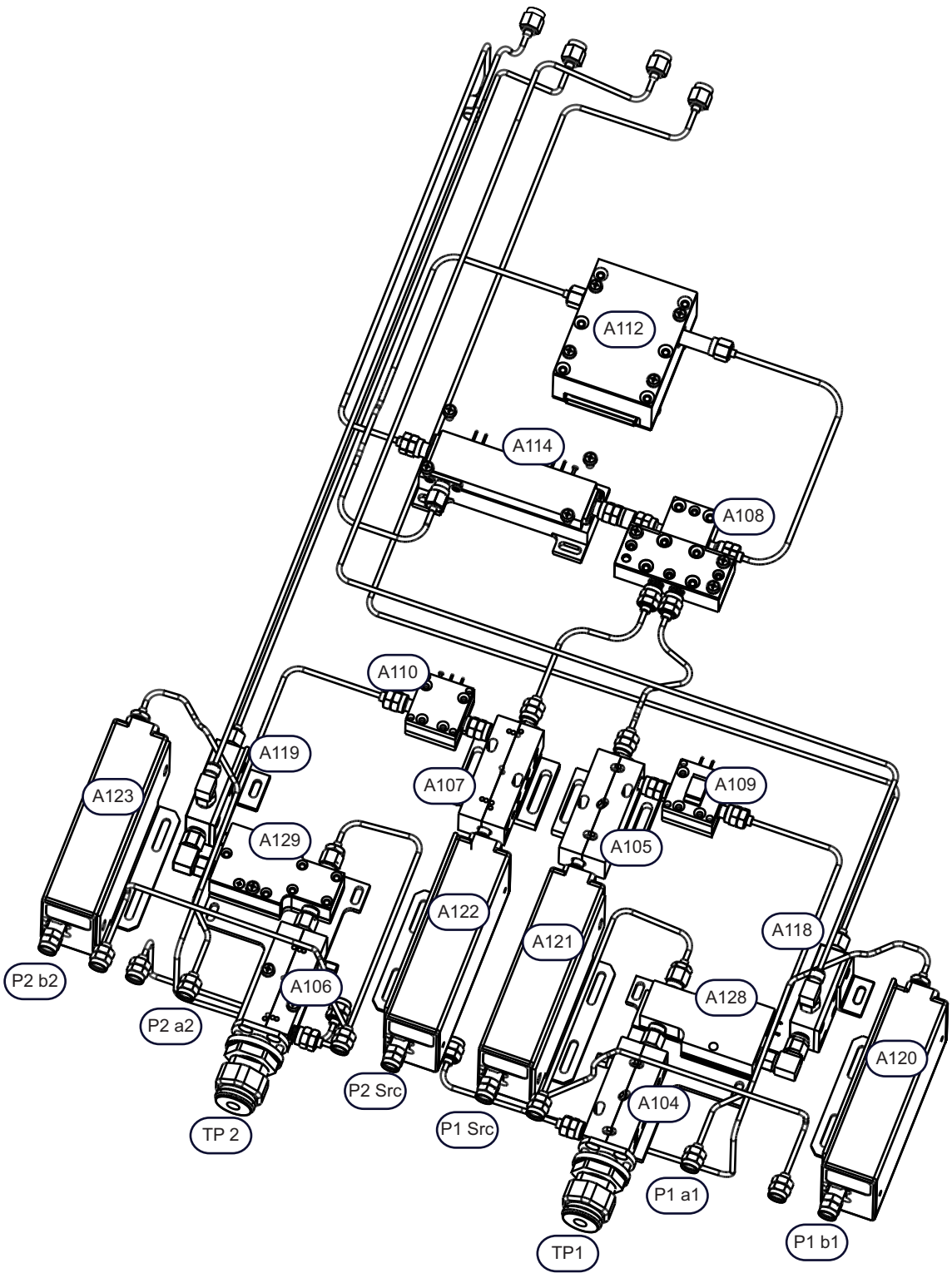

Figure 11-13. MS4645A / MS4647A - Option 062 - RF Deck Bottom Side - Port Group Modules (1 of 2)

Test Ports (from left to right)
- P2 b2 – Port 2 Test Receiver b2
- P2 a2 – Port 2 Reference Receiver a2 – There are no modules connected directly to Port 2 a2.
- TP2 – Test Port 2
- P2 Src – Port 2 Source
- P1 Src – Port 1 Source
- TP1 – Test Port 1
- P1 a1 – Port 1 Reference Receiver a1 – There are no modules connected directly to Port 1 a1.
- P1 b1 – Port 1 Test Receiver b1

RF Control Modules

All are mounted on the A18 RF Control PCB Assembly (not shown)
- A112 – Switched Doubler Module – ND70098 – 59775
- A108 – V Integrated Switch – ND70093 – 66619
- A114 – Switched Quadrupler Module – ND70099 – 60-327

Port 2 Test Receiver b2
- A123 – High Band Step Attenuator, V Connector – No ND – 66050

Test Port 2
- A106 – Test Coupler, V Connector, 70 GHz – No ND – 66245
- A129 – Diplexer/Bias Tee Module, Port 2, 70 GHz – ND73943 - 74278
- A119 – Low Band Bridge – ND70078 – 64016

Port 2 Source
- A122 – High Band Step Attenuator, V Connector – No ND – 66050
- A107 – Reference Coupler, 70 GHz – No ND – 65270
- A110 – Port 2 Level Detector, V Connector, 70 GHz – ND72127 – 67389-2

Port 1 Source
- A121 – High Band Step Attenuator, V Connector – No ND – 66050
- A105 – Reference Coupler 70 GHz – No ND – 65270
- A109 – A109 Port 1 Level Detector, V Connector, 70 GHz – ND72126 – 67389-1

Test Port 1
- A104 – Test Coupler, V Connector, 70 GHz – No ND – 66245
- A128 – Diplexer/Bias Tee Module, Port 1, 70 GHz – ND73942 - 74278
- A118 – Low Band Bridge – ND70078 – 64016

Port 1 Test Receiver b1
- A120 – High Band Step Attenuator, V Connector – No ND – 66050

Figure 11-13. MS4645A / MS4647A - Option 062 - RF Deck Bottom Side - Port Group Modules (2 of 2)

11-14 Finding Module Locations

To locate an RF Deck module location and/or the appropriate removal/replacement procedure, consult any of the following documentation resources in the manual:

- In Chapter 2, “Replaceable Parts”:
  - Table 2-2, “Replacement Parts - Sorted by Location, RPN, and APN” on page 2-3
- In this chapter:
  - Table 11-1, “RF Deck A18 PCB Modules by Instrument Model Number” on page 11-11
  - Table 11-2, “Port Module Groups by Instrument Model and Equipped Option” on page 11-17
- In Chapter 13, “RF Deck Bottom Side Port Modules”:
  - Table 13-1, “MS4642A / MS4644A - Replacement Procedures - By Option, Port, and Module” on page 13-27

11-15 RF Deck Bottom Side - Port Modules - Standard No Options

Introduction

This section lists modules by Test Port Group for Standard No Options with the following applicable notes:

- Note #1: Ports are listed from left to right with the RF Deck upside down, front panel facing technician.
- Note #2: ERN = Engineering Reference Number.
- Note #3: Modules are listed from A18 RF Control PCB Assembly towards front panel starting with the A108 HBTS/VITS. If a module group is connected to the A108, the A108 must be removed before servicing the connected port group module set.

See Table 2-1, “Notes for All Replacement Part Cross-Reference Tables” on page 2-2 above for other relevant notes.

Table 11-3. Port Modules - Standard No Options - RF Deck Bottom Side

Test Port (Note 1)	ERN (Note 2) (Note 3)	Module Name - ND Number - PN	
		MS4642A or MS4644A	MS4645A or MS4647A
Test Port 2 and Test Port 1	A108	High Band Transfer Switch, 40 GHz – ND70092 – 66221 (connects to A107 and A105 below)	V Integrated High Band Transfer Switch, 70 GHz – ND70093 – 66619 (connects to A107 and A109 below)
Test Port 2	A107	Reference Coupler, 40 GHz – No ND – 66487 (connects to A108 above)	Reference Coupler, 70 GHz – No ND – 65270 (connects to A108 above)
	A110	Port 2 Level Detector, 40 GHz, K Connector – ND70094 – 67417-1	Port 2 Level Detector, V Connector, 70 GHz – ND70096 – 67389-1
	A119	Low Band Bridge – ND70078 – 64016	Low Band Bridge – ND70078 – 64016
	A129	Diplexer/Bias Tee Module, Port 2, 40 GHz – ND73941 - 74277 • This is a replacement part for the obsolete A129 Diplexer/Bias Tee Module, Port 2, 40 GHz – ND70089 – 66465	Diplexer/Bias Tee Module, Port 2, 70 GHz – ND73943 – 74278 • This a replacement part for the obsolete A129 Diplexer/Bias Tee Module, Port 2, 70 GHz – ND70091 – 64911
	A106	Test Coupler, 40 GHz – No ND – 66480	Test Coupler, 70 GHz – No ND – 66245
	—	Test Port Adapter, K Connector – No ND – 34YK50C	Test Port Adapter, V Connector – No ND – 34YV50C
Test Port 1	A105	Reference Coupler, 40 GHz – No ND – 66487	Reference Coupler, 70 GHz – No ND – 65270
	A109	Port 1 Level Detector, 40 GHz, K Connector – ND70095 – 67417-2 (connects to A108 above)	Port 1 Level Detector, V Connector, 70 GHz – ND7097 – 67389-2 (connects to A108 above
	A118	Low Band Bridge – ND70078 – 64016	Low Band Bridge – ND70078 – 64016
	A128	Diplexer/Bias Tee Module, Port 1, 40 GHz – ND73940 – 74277 • This is a replacement part for the obsolete A128 Diplexer/Bias Tee Module, Port 1, 40 GHz – ND70088 – 66465	Diplexer/Bias Tee Module, Port 1, 70 GHz – ND73943 – 74278 • This is a replacement part for the obsolete A128 Diplexer/Bias Tee Module, Port 1, 70 GHz – ND70090 – 64911
	A104	Test Coupler, 40 GHz – No ND – 66480	Test Coupler, 70 GHz – No ND – 66245
	—	Test Port Adapter, K Connector – No ND – 34YK50C	Test Port Adapter, V Connector – No ND – 34YV50C

11-16 RF Deck Bottom Side - Port Modules - Option 051

Introduction

This section lists modules by Test Port Group for Option 051 with the following applicable notes:

- Note #1: Ports are listed from left to right with the RF Deck upside down, front panel facing technician.
- Note #2: ERN = Engineering Reference Number.
- Note #3: Modules are listed from A18 RF Control PCB Assembly towards front panel starting with the A108 HBTS/VITS. If a module group is connected to the A108, the A108 must be removed before servicing the connected port group module set.

See Table 2-1, “Notes for All Replacement Part Cross-Reference Tables” on page 2-2 above for other relevant notes.

Table 11-4. Port Modules - Option 051 Loops - RF Deck Bottom Side

Test Port (Note 1)	ERN (Note 2) (Note 3)	Module Name - ND Number - PN	
		MS4642A or MS4644A	MS4645A or MS4647A
Port 2 Source and Port 1 Source	A108	High Band Transfer Switch, 40 GHz – ND70092 – 66221 (connects to A107 and A105 below)	V Integrated High Band Transfer Switch, 70 GHz – ND70093 – 66619 (connects to A107 and A105 below)
Test Port 2	A119	Low Band Bridge – ND70078 – 64016	Low Band Bridge – ND70078 – 64016
	A129	Diplexer/Bias Tee Module, Port 2, 40 GHz – ND73941 – 74277 • This is a replacement part for the obsolete A129 Diplexer/Bias Tee Module, Port 2, 40 GHz – ND70089 – 66465	Diplexer/Bias Tee Module, Port 2, 70 GHz – ND73943 - 74278 • This is a replacement part for the obsolete A129 Diplexer/Bias Tee Module, Port 2, 70 GHz – ND70091 – 64911
	A106	Test Coupler, 40 GHz – No ND – 66480	Test Coupler, 70 GHz – No ND – 66245
	—	Test Port Adapter, K Connector – No ND – 34YK50C	Test Port Adapter, V Connector – No ND – 34YV50C
Port 2 Source	A107	Reference Coupler, 40 GHz – No ND – 66487 (connected to A108 above)	Reference Coupler, 70 GHz – No ND – 65270 (connected to A108 above)
	A110	Port 2 Level Detector, 40 GHz, K Connector – ND72125 – 67417-2	Port 2 Level Detector, V Connector, 70 GHz – ND72127 – 67389-2
Port 1 Source	A105	Reference Coupler, 40 GHz – No ND – 66487 (connected to A108 above)	Reference Coupler, 70 GHz – No ND – 65270 (connected to A108 above)
	A109	Port 1 Level Detector, 40 GHz, K Connector – ND72124 – 67417-1	Port 1 Level Detector, V Connector, 70 GHz – ND72126 – 67389-1
Test Port 1	A118	Low Band Bridge – ND70078 – 64016	Low Band Bridge – ND70078 – 64016
	A128	Diplexer/Bias Tee Module, Port 1, 40 GHz – ND73940 - 74277 • This is a replacement part for the obsolete A128 Diplexer/Bias Tee Module, Port 1, 40 GHz – ND70088 – 66465	Diplexer/Bias Tee Module, Port 1, 70 GHz – ND73942 - 74278 • This is a replacement part for the obsolete A128 Diplexer/Bias Tee Module, Port 1, 70 GHz – ND70090 – 64911
	A104	Test Coupler, 40 GHz – No ND – 66480	Test Coupler, 70 GHz – No ND – 66245
	—	Test Port Adapter, K Connector – No ND – 34YK50C	Test Port Adapter, V Connector – No ND – 34YV50C

11-17 RF Deck Bottom Side - Port Modules - Option 061

Introduction

This section lists modules by Test Port Group for Option 061 with the following applicable notes:

- Note #1: Ports are listed from left to right with the RF Deck upside down, front panel facing technician.
- Note #2: ERN = Engineering Reference Number.
- Note #3: Modules are listed from A18 RF Control PCB Assembly towards front panel starting with the A108 HBTS/VITS. If a module group is connected to the A108, the A108 must be removed before servicing the connected port group module set.

See Table 2-1, "Notes for All Replacement Part Cross-Reference Tables" on page 2-2 above for other relevant notes.

Table 11-5. Port Modules - Option 061 Loops & Two Attenuators - RF Deck Bottom Side (1 of 2)

Test Port (Note 1)	ERN (Note 2) (Note 3)	Module Name - ND Number - PN	
		MS4642A or MS4644A	MS4645A or MS4647A
Port 2 Source and Port 1 Source	A108	High Band Transfer Switch, 40 GHz – ND70092 – 66221 (connects to A107 and A105 below)	V Integrated High Band Transfer Switch, 70 GHz – ND70093 – 66619 (connects to A107 and A105 below)
Port 2 b2	A123	High Band Step Attenuator, 40 GHz – No ND – 66052	High Band Step Attenuator, 70 GHz – No ND – 66050
Test Port 2	A119	Low Band Bridge – ND70078 – 64016	Low Band Bridge – ND70078 – 64016
	A129	Diplexer/Bias Tee Module, Port 2, 40 GHz – ND73941 – 74277 • This is a replacement part for the obsolete A129 Diplexer/Bias Tee Module, Port 2, 40 GHz – ND70089 – 66465	Diplexer/Bias Tee Module, Port 2, 70 GHz – ND73943 – 74278 • This is a replacement part for the obsolete A129 Diplexer/Bias Tee Module, Port 2, 70 GHz – ND70091 – 64911
	A106	Test Coupler, 40 GHz – No ND – 66480	Test Coupler, 70 GHz – No ND – 66245
	—	Test Port Adapter, K Connector – No ND – 34YK50C	Test Port Adapter, V Connector – No ND – 34YV50C
Port 2 Source	A107	Reference Coupler, 40 GHz – No ND – 66487 (connects to A108 above)	Reference Coupler, 70 GHz – No ND – 65270 (connects to A108 above)
	A110	Port 2 Level Detector, 40 GHz, K Connector – ND72125 – 67417-2	Port 2 Level Detector, V Connector, 70 GHz – ND72127 – 67389-2
Port 1 Source	A105	Reference Coupler, 40 GHz – No ND – 66487 (connects to A108 above)	Reference Coupler, 70 GHz – No ND – 65270
	A109	Port 1 Level Detector, 40 GHz, K Connector – ND72124 – 67417-1	Port 1 Level Detector, V Connector, 70 GHz – ND72126 – 67389-1
	A121	High Band Step Attenuator, 40 GHz – No ND – 66052	High Band Step Attenuator, 70 GHz – No ND – 66050

Table 11-5. Port Modules - Option 061 Loops & Two Attenuators - RF Deck Bottom Side (2 of 2)

Test Port (Note 1)	ERN (Note 2) (Note 3)	Module Name - ND Number - PN	
		MS4642A or MS4644A	MS4645A or MS4647A
Test Port 1	A118	Low Band Bridge – ND70078 – 64016	Low Band Bridge – ND70078 – 64016
	A128	Diplexer/Bias Tee Module, Port 1, 40 GHz – ND73940 – 74277 • This is a replacement part for the obsolete A128 Diplexer/Bias Tee Module, Port 2, 40 GHz – ND70088 – 66465	Diplexer/Bias Tee Module, Port 1, 70 GHz – ND73942 – 74278 • This is a replacement part for the obsolete A128 Diplexer/Bias Tee Module, Port 2, 70 GHz – ND70090 – 64911
	A104	Test Coupler, 40 GHz – No ND – 66480	Test Coupler, 70 GHz – No ND – 66245
	—	Test Port Adapter, K Connector – No ND – 34YK50C	Test Port Adapter, V Connector – No ND – 34YV50C

11-18 RF Deck Bottom Side - Port Modules - Option 062

Introduction

This section lists modules by Test Port Group for Option 062 with the following applicable notes:

- Note #1: Ports are listed from left to right with the RF Deck upside down, front panel facing technician.
- Note #2: ERN = Engineering Reference Number.
- Note #3: Modules are listed from A18 RF Control PCB Assembly towards front panel starting with the A108 HBTS/VITS. If a module group is connected to the A108, the A108 must be removed before servicing the connected port group module set.

See Table 2-1, "Notes for All Replacement Part Cross-Reference Tables" on page 2-2 above for other relevant notes.

Table 11-6. Port Modules - Option 062 Loops & Four Attenuators - RF Deck Bottom Side (1 of 2)

Test Port (Note 1)	ERN (Note 2) (Note 3)	Module Name - ND Number - PN	
		MS4642A or MS4644A	MS4645A or MS4647A
Port 2 Source and Port 1 Source	A108	High Band Transfer Switch, 40 GHz – ND70092 – 66221 (connects to A107 and A105 below)	V Integrated High Band Transfer Switch, 70 GHz – ND70093 – 66619 (connects to A107 and A105 below)
Port 2 b2	A123	High Band Step Attenuator, 40 GHz – No ND – 66052	High Band Step Attenuator, 70 GHz – No ND – 66050
Test Port 2	A119	Low Band Bridge – ND70078 – 64016	Low Band Bridge – ND70078 – 64016
	A129	Diplexer/Bias Tee Module, Port 2, 40 GHz – ND73941 - 74277 • This is a replacement for the obsolete A129 Diplexer/Bias Tee Module, Port 2, 40 GHz – ND70089 – 66465	Diplexer/Bias Tee Module, Port 2, 70 GHz – ND73943 - 74278 • This is a replacement for the obsolete A129 Diplexer/Bias Tee Module, Port 2, 70 GHz – ND70091 – 64911
	A106	Test Coupler, 40 GHz – No ND – 66480	Test Coupler, 70 GHz – No ND – 66245
	—	Test Port Adapter, K Connector – No ND – 34YK50C	Test Port Adapter, V Connector – No ND – 34YV50C
Port 2 Source	A107	Reference Coupler, 40 GHz – No ND – 66487 (connects to A108 above)	Reference Coupler, 70 GHz – No ND – 65270 (connects to A108 above)
	A110	Port 2 Level Detector, 40 GHz, K Connector – ND72125 – 67417-2	Port 2 Level Detector, V Connector, 70 GHz – ND72127 – 67389-2
	A122	High Band Step Attenuator, 40 GHz – No ND – 66052	High Band Step Attenuator, 70 GHz – No ND – 66050
Port 1 Source	A105	Reference Coupler, 40 GHz – No ND – 66487 (connects to A108 above)	Reference Coupler, 70 GHz – No ND – 65270 (connects to A108 above)
	A109	Port 1 Level Detector, 40 GHz, K Connector – ND72124 – 67417-1	Port 1 Level Detector, V Connector, 70 GHz – ND72126 – 67389-1
	A121	High Band Step Attenuator, 40 GHz – No ND – 66052	High Band Step Attenuator, 70 GHz – No ND – 66050

Table 11-6. Port Modules - Option 062 Loops & Four Attenuators - RF Deck Bottom Side (2 of 2)

Test Port (Note 1)	ERN (Note 2) (Note 3)	Module Name - ND Number - PN	
		MS4642A or MS4644A	MS4645A or MS4647A
Test Port 1	A118	Low Band Bridge – ND70078 – 64016	Low Band Bridge – ND70078 – 64016
	A128	Diplexer/Bias Tee Module, Port 1, 40 GHz – ND73940 – 74277 • This is a replacement for the obsolete A128 Diplexer/Bias Tee Module, Port 1, 40 GHz – ND70088 – 66465	Diplexer/Bias Tee Module, Port 1, 70 GHz – ND73942 – 74278 • This is a replacement for the obsolete A128 Diplexer/Bias Tee Module, Port 1, 70 GHz – ND70090 – 64911
	A104	Test Coupler, 40 GHz – No ND – 66480	Test Coupler, 70 GHz – No ND – 66245
	—	Test Port Adapter, K Connector – No ND – 34YK50C	Test Port Adapter, V Connector – No ND – 34YV50C
Port 1 b1	A120	High Band Step Attenuator, 40 GHz – No ND – 68570	High Band Step Attenuator, 70 GHz – No ND – 66050

Chapter 12 — RF Deck Bottom Side A18 Modules and PCB

12-1 Introduction

This procedure describes how to remove, replace, and install the modules mounted on or through the A18 RF Control PCB located in the bottom side of the RF Deck. All of the A18 modules and the A18 PCB itself can be serviced while the RF Deck is mounted in the instrument chassis with the instrument positioned upside down. As described below, the installed modules and their attributes vary depending on the instrument model and the installed options.

- Section 12-2 “A18 Module Location and Configuration” on page 12-2
- A112 Switched Doubler Module (SDM)
  - Section 12-3 “Remove A112 SDM – ND70098 – 59772” on page 12-7
  - Section 12-4 “Prepare Replacement A112 SDM – ND70098 – 59772” on page 12-9
  - Section 12-5 “Install A112 SDM – ND70098 – 59772” on page 12-9
- A114 Switched Quadrupler Module (SQM)
  - Section 12-6 “Remove A114 SQM – ND70099 – 60-327” on page 12-11
  - Section 12-7 “Prepare Replacement A114 SQM – ND70099 – 60-327” on page 12-13
  - Section 12-8 “Install A114 SQM – ND70099 – 60-327” on page 12-15
- A108 High Band Transfer Switch (HBTS) or A108 V Integrated High Band Transfer Switch (VITS)
  - Section 12-9 “Remove A108 HBTS/VITS Module – ND70092 or ND70093” on page 12-16
  - Section 12-10 “Prepare Replacement A108 HBTS/VITS” on page 12-20
  - Section 12-11 “Install A108 HBTS/VITS – ND70092 or ND70093” on page 12-20
- A133 20-40 GHz RF Coupler Module (RCM)
  - Section 12-12 “Remove A133 RF Coupler Module – No ND – 72237” on page 12-22
  - Section 12-13 “Prepare A133 20-40 GHz RF Coupler Module – No ND – 72237” on page 12-22
  - Section 12-14 “Install A133 RF Coupler Module – No ND – 72237” on page 12-23
- A18 RF Control PCB Assembly
  - Section 12-15 “Remove A18 RF Control PCB – ND70068 – 61929-3” on page 12-24
  - Section 12-16 “Prepare Replacement A18 PCB – ND70068 – 61929-3” on page 12-28
  - Section 12-17 “Install A18 RF Control PCB – ND70068 – 61929-3” on page 12-28

12-2 A18 Module Location and Configuration

The A18 RF Control PCB Assembly and the modules on or within it are located towards the rear of the RF Deck. These modules and the PCB can be removed while the RF Deck remains mounted in the instrument chassis.

Caution	Do not perform any RF Deck procedures unless the instrument is turned off and disconnected from AC Power. Damage to RF components may occur if certain inputs/outputs are removed with live RF power.

Removing the A18 PCB

If the A18 PCB is to be removed, all the modules mounted on or in it must be removed as well as all semi-rigid coaxial cables, coaxial cables, and signal/power cables. See Figure 12-7, “A18 RF Control PCB Assembly – ND70068 – 61929-3” on page 12-25 for additional information.

A18 Cables and Connectors

The modules in the A18 PCB area vary depending on the instrument model as shown in Table 12-1 below. The A112 SDM and A114 SQM have an attached signal/power harness for connection to the A18 PCB.

Table 12-1. RF Deck A18 Modules by Instrument Model Number

Engineering Reference Number	Module Name Replacement and Anritsu Part Numbers	Equipped in this VectorStar Model?			
		MS4642A 20 GHz VNAs	MS4644A 40 GHz VNAs	MS4645A 50 GHz VNAs	MS4647A 70 GHz VNAs
A18 PCB	A18 RF Control PCB Assembly (A18 PCB) ND70068 – 61929-3	**YES**	**YES**	**YES**	**YES**
A108 HBTS	A108 High Band Transfer Switch (A108 HBTS), 40 GHz ND70092 – 66221 *If referring to both the HBTS above and the VITS below, the designator reads “A108 HBTS/VITS.*	**YES**	**YES**	NO	NO
A108 VITS	A108 V Integrated High Band Transfer Switch (A108 VITS), 70 GHz ND70093 – 66619	NO	NO	**YES**	**YES**
A112 SDM	A112 Switched Doubler Module (A112 SDM) ND70098 – 59772	NO	**YES**	**YES**	**YES**
A114 SQM	A114 Switched Quadrupler Module (A114 SQM) ND70099 – 60-327	NO	NO	**YES**	**YES**
A133 RCM	A133 20-40 GHz RF Coupler Module (A133 RCM) No ND – 72237	NO	NO	NO	**YES with Option 080/081**

MS4642A A18 RF Control PCB Configuration

Each model variant of the A18 PCB configuration is shown below in Figure 12-1, Figure 12-2, and Figure 12-3.

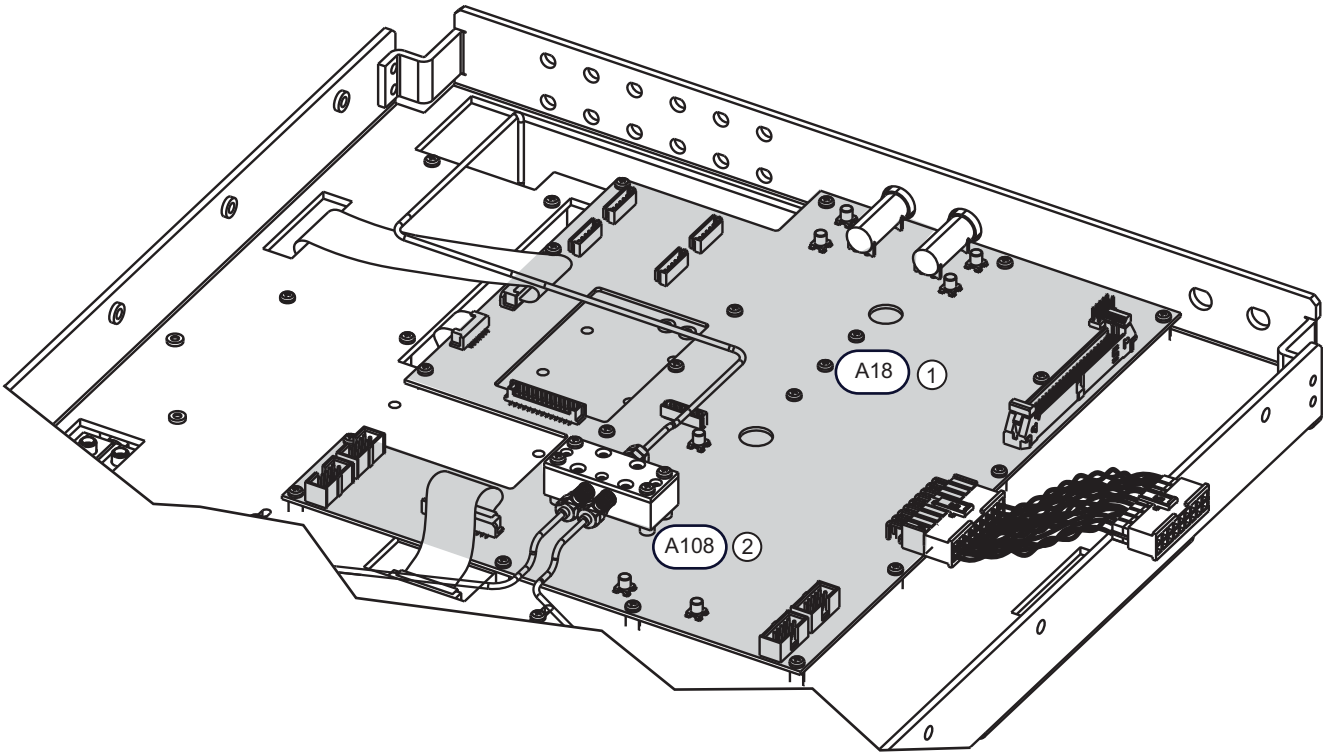

MS4642A 20 GHz VNA – RF Deck Bottom Side – A108 Module and A18 PCB	1. A18 RF Control PCB Assembly – ND70068 – 61929-3
The A108 module and A17 PCB can be replaced while the RF Deck remains in the instrument chassis.	2. A108 High Band Transfer Switch, 40 GHz – ND70092 – 66221

Figure 12-1. MS4642A 20 GHz VNA - RF Deck - A18 Module and PCB

MS4644A A18 RF Control PCB Configuration

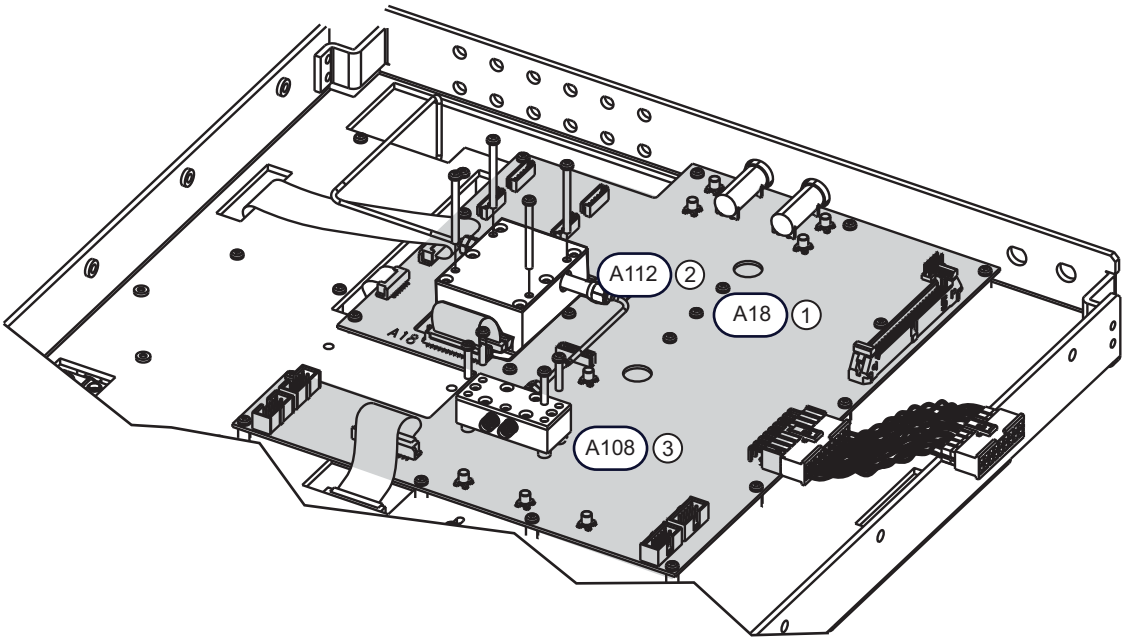

RF Deck A18 Modules and PCB – MS4644A 40 GHz VNA The A18 modules and PCB are replaceable while the RF Deck remains in the instrument chassis.	1. A18 RF Control PCB Assembly – ND70068 – 61929-3 2. A112 Switched Doubler Module (A112 SDM) – ND70098 – 59772 3. A108 High Band Transfer Switch, 40 GHz – ND70092 – 66221

Figure 12-2. MS4644A 40 GHz VNA - RF Deck - A18 Modules and PCB

MS4645A / MS4647A A18 RF Control PCB Configuration

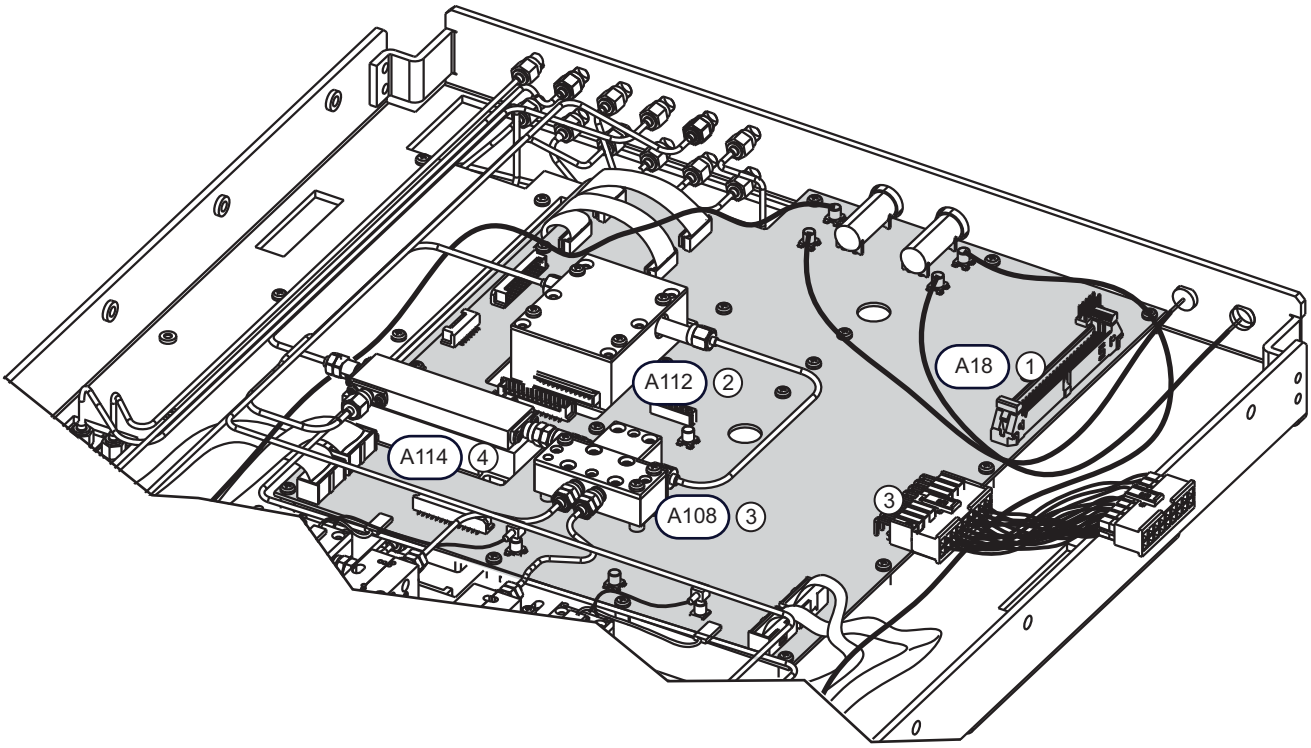

MS4645A 50 GHz and MS4647A 70 GHz VNA – RF Deck – Bottom Side – A18 modules and PCB The A18 modules and PCB can be replaced while the RF Deck remains in the instrument chassis.	1. A18 – A18 RF Control PCB Assembly (A18 PCB) – ND70068 – 61929-3 2. A112 – A112 Switched Doubler Module (A112 SDM) – ND70098 – 59772 3. A114 – A114 Switched Quadrupler Module (A114 SQM) – ND70099 – 60-327 4. A108 – A108 V Integrated High Band Transfer Switch (A108 VITS), 70 GHz – ND70093 – 66619

Figure 12-3. MS4645A 50 GHz and MS4647A 70 GHz VNAs - RF Deck - A18 PCB Modules

MS4647A with Option 080/081 A18 RF Control PCB Configuration

The RF Deck Bottom Side A18 RF Control PCB configuration for the MS4647A with Option 080/081 is the same as MS4647A configurations for Standard No Options, Option 051, Option 061, and Option 062 with the addition of the A133 20 - 40 GHz Coupler Module located between the A112 Switched Doubler Module and the A108 V Integrated High Band Transfer Switch.

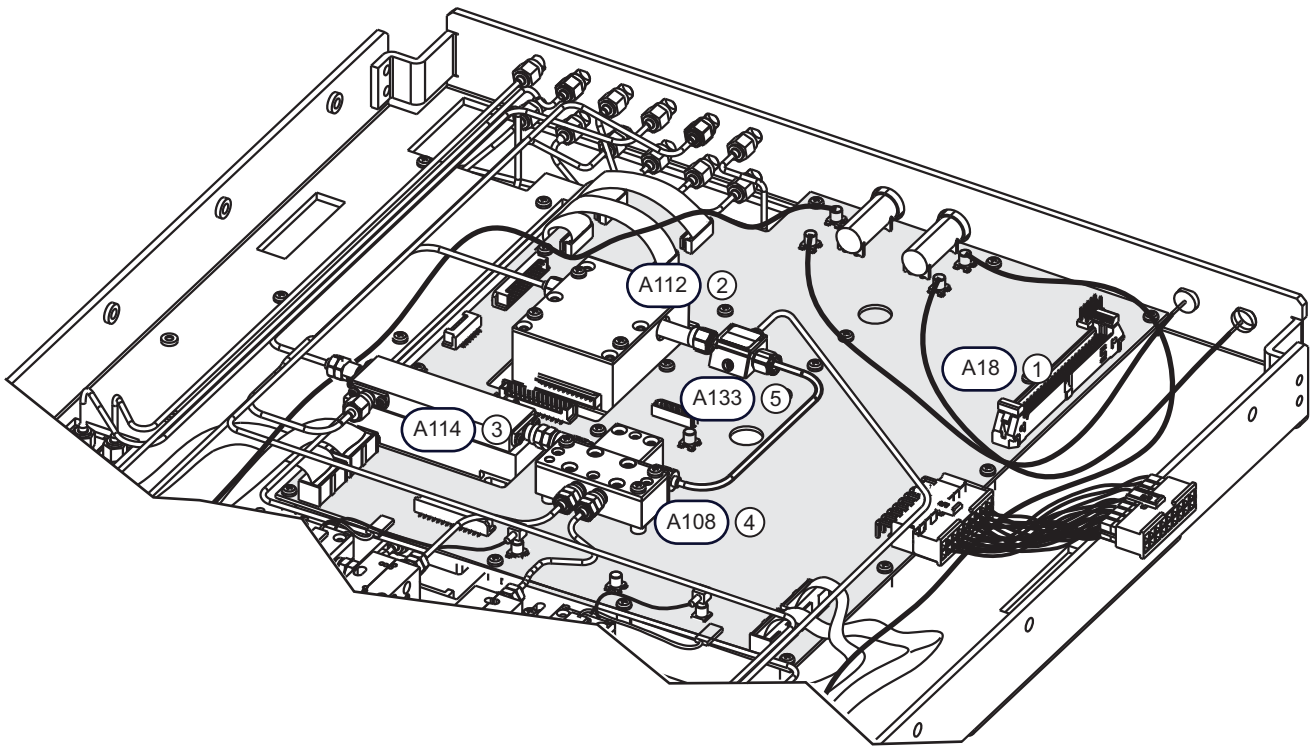

The MS4647A with Option 080/081 VNA RF Deck Bottom Side modules are the same for RF Decks with Standard and Option 080 or Option 051, 061, or 062 with Option 081. 1. A18 – A18 RF Control PCB Assembly (A18 PCB) – ND70068 – 61929-3 – The A18 modules and PCB can be replaced while the RF Deck remains in the instrument chassis.	2. A112 Switched Doubler Module (A112 SDM) – ND70098 – 59772 3. A114 Switched Quadrupler Module (A114 SQM) – ND70099 – 60-327 4. A108 V Integrated High Band Transfer Switch (A108 VITS), 70 GHz – ND70093 – 66619 5. A133 20-40 GHz RF Coupler Module (A133 RCM) – No ND – 72237

Figure 12-4. RF Deck Bottom Side Modules - MS4647A with Option 080/081

12-3 Remove A112 SDM – ND70098 – 59772

This procedure describes how to remove the A112 Switched Doubler Module (A112 SDM) located on the RF Deck bottom side within the A18 PCB Assembly. Use this procedure to either replace the module or to provide access for other components. All orientation directions are from the point of view of the Test Ports facing the technician.

Part and Applicability

- A112 Switched Doubler Module (A112 SDM) – ND70098 – 59772
- This module is used in the MS4644A, MS4645A, or MS4647A models with any combination of options.

Reference Figures

- For the MS4644A configuration, see Figure 12-2, "MS4644A 40 GHz VNA - RF Deck - A18 Modules and PCB" on page 12-4 above.
- For the MS4645A or MS4647A configuration, see Figure 12-3, "MS4645A 50 GHz and MS4647A 70 GHz VNAs - RF Deck - A18 PCB Modules" on page 12-5 above.

Procedure

Caution	Do not perform any RF Deck procedures unless the instrument is turned off and disconnected from AC Power. Damage to RF components may occur if certain inputs/outputs are removed with live RF power.

1. If only the A112 SDM is to be replaced, continue with the common procedures immediately below. If removing this module for access to other components, skip ahead to Step #7 - Identify A112 SDM location.

Common Procedures

2. Prepare work area, work surface, and observe safety issues.
   - See Section 7-4 "Common - Prepare Work Area and Safety" on page 7-9.
3. Remove Outer Cover.
   - See Section 7-5 "Common - Remove Outer Cover" on page 7-10.
4. Remove Inner Top Cover.
   - See Section 7-6 "Common - Remove Inner Cover" on page 7-13.
5. The Front Panel can stay in place.
6. Position the instrument so that it is upside down, with the RF Deck up.

Remove the A112 SDM

7. Identify A112 SDM location.
   - Figure 12-2, "MS4644A 40 GHz VNA - RF Deck - A18 Modules and PCB" on page 12-4
   - Figure 12-3, "MS4645A 50 GHz and MS4647A 70 GHz VNAs - RF Deck - A18 PCB Modules" on page 12-5
8. Disconnect the A112 SDM signal/power cable from the A18 PCB at connector P4.

Branch Point

9. Depending on the instrument model number, do one of the following steps:
   - If a MS4644A, skip ahead to Step #10 - Remove the MS4644A A112 SDM.
   - If a MS4645A or MS4647A, skip ahead to Step #17 - Remove the MS4645A / MS4647A A112 SDM.

Remove the MS4644A A112 SDM

10. Remove the MS4644A A112 SDM.

11. On the left side of the SDM, remove the semi-rigid coaxial cable and bend it slightly out of the way.

12. On the right side, remove both ends of the semi-rigid coaxial cable between the SDM and the A108 High Band Transfer Switch (A108 HBST). Set the cable aside.

Caution	Take care working around the semi-rigid coaxial cables connected between the A108 HBTS/VITS and the front Test Ports.

13. Unplug the signal/power cable from the A18 RF Control PCB Assembly (A18 PCB) at connector P4. If replacing the A112 SDM, this cable will be installed onto the replacement unit.

14. Remove the four (4) pan head Phillips M3 × 35 mm screws holding the SDM in place.

15. Lift the SDM out and set aside.

16. Skip ahead to Step #23 - Next step options for A112 SDM removal.

Remove the MS4645A / MS4647A A112 SDM

17. Remove the MS4645A / MS4647A A112 SDM.

18. On the left side of the A112 SDM, remove the semi-rigid coaxial cable and slightly bend it out of the way.

19. On the right side, remove the semi-rigid coaxial cable between the A112 SDM and the A108 V Integrated High Band Transfer Switch (A108 VITS), Set the cable aside.

Caution	Take care working around the semi-rigid coaxial cables connected between the A108 HBTS/VITS and the front Test Ports.

20. Unplug the signal/power cable from the A18 PCB at connector P4. If replacing the A112 SDM, this cable will be installed onto the replacement unit.

21. Remove the four (4) pan head Phillips M3 × 35 mm screws holding the SDM in place.

22. Lift out the A112 SDM out and set aside.

Next Steps

23. Next step options for A112 SDM removal.

- The next step options for the A112 SDM depend on the removal purpose.
- To install a replacement A112 SDM, see Section 12-4 “Prepare Replacement A112 SDM – ND70098 – 59772” on page 12-9.
- To remove other A18 PCB components, see:
  - Section 12-6 “Remove A114 SQM – ND70099 – 60-327” on page 12-11.
  - Section 12-9 “Remove A108 HBTS/VITS Module – ND70092 or ND70093” on page 12-16.
- To remove the A18 PCB, see Section 12-15 “Remove A18 RF Control PCB – ND70068 – 61929-3” on page 12-24.

12-4 Prepare Replacement A112 SDM – ND70098 – 59772

If replacing the A112 SDM and the signal/power cable harness is still attached to the to-be-replaced A112 SDM, remove it and attach to the replacement A112 SDM.

12-5 Install A112 SDM – ND70098 – 59772

Use this procedure to install an existing or replacement A112 SDM into the A18 RF Control PCB Assembly.

Part and Applicability

- A112 Switched Doubler Module (SDM) – ND70098 – 59772
- This module is used in the MS4644A, MS4645A, or MS4647A with any combination of options.

Reference Figures

- For the MS4644A configuration, see Figure 12-2, “MS4644A 40 GHz VNA - RF Deck - A18 Modules and PCB” on page 12-4 above.
- For the MS4645A or MS4647A configuration, see Figure 12-3, “MS4645A 50 GHz and MS4647A 70 GHz VNAs - RF Deck - A18 PCB Modules” on page 12-5 above.

Procedure

Caution	Do not perform any RF Deck procedures unless the instrument is turned off and disconnected from AC Power. Damage to RF components may occur if certain inputs/outputs are removed with live RF power.

1. Make sure the signal/power cable is attached to the A112 SDM.
2. Holding the SDM over the A18 PCB, connect the ribbon cable to the A18 PCB P4 connector.
3. Place the SDM in the chassis, folding the ribbon cable as required, and loosely insert the four (4) pan head Phillips M3 × 35 mm screws. When all are threaded, tighten the screws.

Branch Point

4. Depending on the instrument model number, do one of the following steps:
   - If a MS4644A, skip ahead to Step #5 - Install the MS4644A A112 SDM.
   - If a MS4645A or MS4647A, skip ahead to Step #9 - Install the MS4645A / MS4647A A112 SDM.

Install the MS4644A A112 SDM

5. Install the MS4644A A112 SDM.
6. On the left side of the A112 SDM, attach the semi-rigid coaxial cable, make sure it is correctly aligned and threaded, and torque both connectors to 8 lbf · in.
7. On the right side, install the semi-rigid coaxial cable between the SDM and the A108 High Band Transfer Switch (A108 HBTS). Make sure both connectors are correctly aligned, threaded and torque to 8 lbf · in.

Caution	Take care working around the semi-rigid coaxial cables connected between the A108 HBTS/VITS and the front Test Ports.

8. Skip ahead to Step #12 - Next step options for A112 SDM installation.

Install the MS4645A / MS4647A A112 SDM

9. Install the MS4645A / MS4647A A112 SDM.
10. On the left side of the A112 SDM, attach the semi-rigid coaxial cable, make sure its connectors are correctly aligned and threaded, and torque to 8 lbf · in.

11. On the right side, install the semi-rigid coaxial cable between the A112 SDM and the A108 VITS, and again, align, thread, and torque the two connectors to 8 lbf · in.

Caution	Take care working around the semi-rigid coaxial cables connected between the A108 HBTS/VITS and the front Test Ports.

Next Steps

12. Next step options for A112 SDM installation.

- The next step options for the A112 SDM depend on the installation purpose.
- To install other A18 PCB components, see:
  - Section 12-8 “Install A114 SQM – ND70099 – 60-327” on page 12-15.
  - Section 12-11 “Install A108 HBTS/VITS – ND70092 or ND70093” on page 12-20.
- If only replacing the A112 SDM, skip ahead to Step #13 - A112 SDM installation completion.

Completion Procedures

13. A112 SDM installation completion.

14. Position the instrument so that it is right side up.

15. If removed, install the Front Panel.

- See Section 10-6 “Install the Phase 1 Front Panel Assembly” on page 10-19.

16. Install the Inner Top Cover.

- See Section 7-7 “Common - Install Inner Cover” on page 7-15.

17. Install the Outer Cover.

- See Section 7-8 “Common - Install Outer Cover” on page 7-16.

12-6 Remove A114 SQM – ND70099 – 60-327

This procedure describes how to remove the Switched Quadrupler Module (SQM) from the A18 RF Control PCB Assembly which is located on the RF Deck Bottom Side. Use this procedure to either replace the module or to provide access for other components. All orientation directions are from the point of view of the Test Ports facing the technician. See Figure 12-3, "MS4645A 50 GHz and MS4647A 70 GHz VNAs - RF Deck - A18 PCB Modules" on page 12-5 above for orientation and parts location.

Part and Applicability

- A114 Switched Quadrupler Module (A114 SQM) – ND70099 – 60-327
- This module is used in the MS4645A or MS4647A with any combination of options.

Procedure

Caution	Do not perform any RF Deck procedures unless the instrument is turned off and disconnected from AC Power. Damage to RF components may occur if certain inputs/outputs are removed with live RF power.

Common Procedures

1. If only the A114 SQM is to be replaced, use the common procedures below. If removing this module for access to other components, skip ahead to Step #7 - Identify A114 SQM location.
2. Prepare work area, work surface, and observe safety issues.
   - See Section 7-4 "Common - Prepare Work Area and Safety" on page 7-9.
3. Remove Outer Cover.
   - See Section 7-5 "Common - Remove Outer Cover" on page 7-10.
4. Remove Inner Top Cover.
   - See Section 7-6 "Common - Remove Inner Cover" on page 7-13.
5. The Front Panel can stay in place.
6. Position the instrument so that it is upside down, with the RF Deck up.

Remove the A114 SQM

7. Identify A114 SQM location.
   - Figure 12-3, "MS4645A 50 GHz and MS4647A 70 GHz VNAs - RF Deck - A18 PCB Modules" on page 12-5
8. Disconnect the A114 SQM signal/power cable from the A18 PCB at connector J17.
9. Remove the semi-rigid coaxial cable between the A114 SQM and the A112 Switched Doubler Module (A112 SDM).
10. Disconnect the connector on the semi-rigid coaxial cable between the A114 SQM and the Rear Panel.
11. Using two 5/16" end wrenches, loosen the connection between the A114 SQM and the A108 V Integrated High Band Transfer Switch (A108 VITS).
    - Use a plain 5/16" end wrench to hold the A114 SQM connector.
    - Use a 5/16" torque end wrench set to 8 lbf · in to loosen the adapter between the A114 SQM and the A108 VITS.

Caution	Take care working around the semi-rigid coaxial cables connected between the A108 VITS and the front Test Ports.

12. Remove the four (4) pan head Phillips M3 × 8 mm screws holding the A114 SQM to the RF Deck Chassis.

13. Remove the RF connector between A114 SQM and the A108 VITS. The V (m-m) adapter should stay with the A108 VITS.
14. Lift the A114 SQM module, cable, and bracket assembly out of the chassis and either set aside or prepare the replacement module as described below.

Next Steps

15. Next step options for A114 SQM removal.
    - The next step options for the A114 SQM depend on the removal purpose.
    - To install a replacement A114 SQM, see Section 12-7 “Prepare Replacement A114 SQM – ND70099 – 60-327” on page 12-13.
    - To remove other A18 PCB components, see:
        - Section 12-9 “Remove A108 HBTS/VITS Module – ND70092 or ND70093” on page 12-16
        - Section 12-3 “Remove A112 SDM – ND70098 – 59772” on page 12-7
    - To remove the A18 PCB, see Section 12-15 “Remove A18 RF Control PCB – ND70068 – 61929-3” on page 12-24.

12-7 Prepare Replacement A114 SQM – ND70099 – 60-327

Use this procedure to prepare a replacement A114 SQM module which involves installing the mounting bracket as shown below in Figure 12-5.

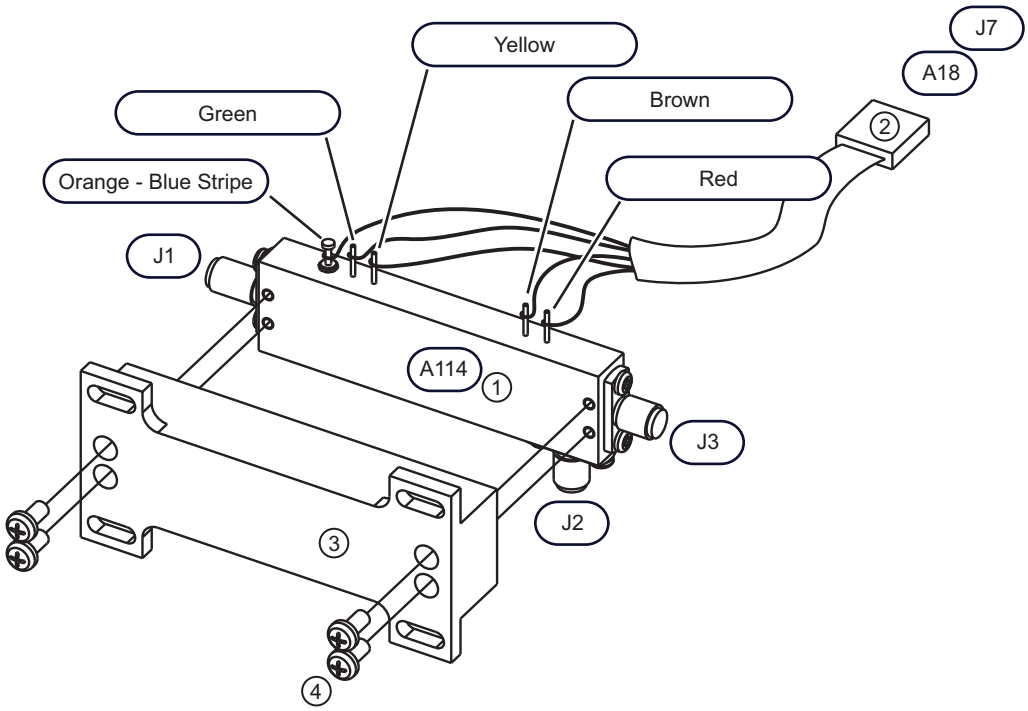

1. A114 – Switched Quadrupler Module – ND70099 – 60-327 2. A114 J1 – Connects via a semi-rigid coaxial cable to the RF Deck Top Side A113 5-20 GHz RF Doubler. 3. A114 J2 – Connects via a semi-rigid coaxial cable to the A112 SDM. 4. A114 J3 – Connects via an 34VV50B adapter to the A108 VITS	5. The replacement part comes with the harness installed. The harness is oriented towards the rear panel and is connected to the A18 PCB at connector J7. 6. The A114 SQM is attached to its bracket with four (4) screws. The bracket is attached to the A18 PCB with four pan head Phillips M3 × 8 mm screws. 7. Four (4) pan head Phillips 2×56 × 0.250” screws hold the A114 SQM to the bracket.

Figure 12-5. A114 Switched Quadrupler Module (A114 SQM) and Bracket Assembly

Procedure

Caution	Do not perform any RF Deck procedures unless the instrument is turned off and disconnected from AC Power. Damage to RF components may occur if certain inputs/outputs are removed with live RF power.

1. It is assumed that the A114 SQM has been removed from the A18 PCB in the RF Deck Bottom Side.
2. Remove the four (4) pan head Phillips 2×56 × 0.250” mounting screws holding the A114 SQM into its bracket.
3. Set the to-be-replaced SQM aside.
4. Install the replacement A114 SQM into its bracket, insert the four (4) 2×56 × 0.250”screws, and then tighten. There is no required orientation between the bracket and the SQM.
5. The assembly is ready to be installed in the A18 PCB.

12-8 Install A114 SQM – ND70099 – 60-327

Use this procedure to install an existing or replacement A114 SQM module into the A18 RF Control PCB Assembly.

Procedure

Caution	Do not perform any RF Deck procedures unless the instrument is turned off and disconnected from AC Power. Damage to RF components may occur if certain inputs/outputs are removed with live RF power.

1. Position the A114 SQM with its attached cable harness facing the Rear Panel.
   - See Figure 12-3, "MS4645A 50 GHz and MS4647A 70 GHz VNAs - RF Deck - A18 PCB Modules" on page 12-5 for location and orientation.
2. Connect the A114 signal/power harness connector to the A18 J3 connector.
3. Carefully align the A114 SQM RF connector with the adapter attached to the A108 VITS.
4. Loosely insert the four (4) pan head Phillips M3 × 8 mm screws. Do not tighten at this point.

Torque RF Connectors

5. Once alignment and correct threading is established between the A108 VITS and A114 SQM, use a plain 5/16" end wrench to hold the A114 SQM connector. Use a 5/16" torque end wrench set to 8 lbf · in to torque the adapter connector.
6. Tighten the screws holding the A114 SQM Bracket to the RF Deck chassis.
7. Connect the semi-rigid coaxial cable coming from the rear panel (and the top side A113 5-20 GHz Doubler Module) to the A114 SQM J3 port and torque to 8 lbf · in.
8. Install and connect the semi-rigid coaxial cable between the A112 SDM and A114 SQM J2 port and torque to 8 lbf · in as above.

Next Steps

9. Next step options for the A114 SQM installation.
   - The next step options for the A114 SQM depend on the installation purpose.
   - To install other A18 PCB components, see:
     - Section 12-8 "Install A114 SQM – ND70099 – 60-327" on page 12-15.
     - Section 12-11 "Install A108 HBTS/VITS – ND70092 or ND70093" on page 12-20.
   - If only replacing the A114 SQM, skip ahead to Step #10 - A114 SQM installation completion.

Completion Procedures

10. A114 SQM installation completion.
11. Check that all connections are made and correctly torqued.
12. Position the instrument so that it is right side up.
13. If removed, install the Front Panel.
    - See Section 10-6 "Install the Phase 1 Front Panel Assembly" on page 10-19.
14. Install the Inner Top Cover.
    - See Section 7-7 "Common - Install Inner Cover" on page 7-15.
15. Install the Outer Cover.
    - See Section 7-8 "Common - Install Outer Cover" on page 7-16.

12-9 Remove A108 HBTS/VITS Module – ND70092 or ND70093

Note	Although the HBTS and the VITS share the same A108 Engineering Reference Number, the two modules are different components. The HBTS (A108 High Band Transfer Switch – ND70092 – 66221) is only used model MS4642A and MS4644A VNAs. The VITS (A108 V Integrated High Band Transfer Switch – ND70093 – 66619) is only used on model MS4645A and MS4647A VNAs. The first procedure describes how to remove either component for replacement or to provide access to another component such as the A18 PCB. The second procedure describes how to prepare a replacement HBTS/VITS. The third procedure describes how to install the HBTS/VITS. In the procedures below: – A108 HBTS refers to the ND70092 – 66221 component. – A108 VITS refers to the ND70093 – 66619 component. – A108 HBTS/VITS refers to either component.

Caution	Do not perform any RF Deck procedures unless the instrument is turned off and disconnected from AC Power. Damage to RF components may occur if certain inputs/outputs are removed with live RF power.

Critical Removal Concepts

Both the A108 HBTS and the A108 VITS have connector pins that mate with sockets on the A18 RF Control PCB Assembly. Removing the A108 module requires that it be lifted straight up from the A18 RF Control PCB as shown in Figure 12-6 below.

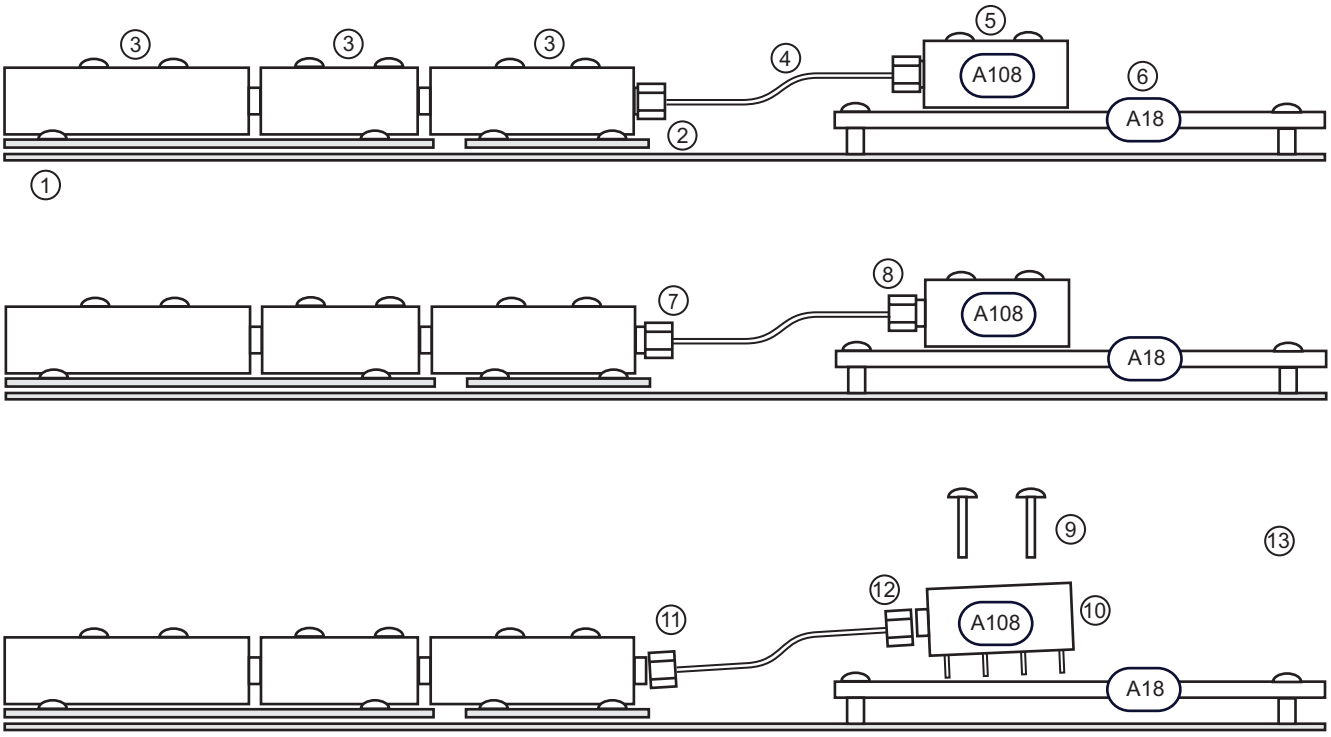

Figure 12-6. A108 HBTS/VITS General Removal Procedure (1 of 2)

Top	Middle
1. RF Deck chassis. 2. Mounting plates, under some port components, fastened to the RF Deck Chassis. 3. Mounting screws holding the port components to the mounting plates. 4. Semi-rigid coaxial cable between the final port module component and the A108 HBTS/VITS. There are two cables between the A108 and the central port groups. 5. A108 – A108 High Band Transfer Switch (HBTS) or A108 V Integrated High Band Transfer Switch (VITS). On the bottom side of the module, pins connect to sockets in the A18 PCB. The module is fastened to the A18 PCB with four (4) mounting screws. 6. A18 – A18 RF Control PCB Assembly with is mounted with screws to the RF Deck chassis.	7. Loosen the two connectors holding the semi-rigid coaxial cables to the port group modules. 8. Loosen the two connectors holding the semi-rigid coaxial cables to the A108 HBTS/VITS. **Bottom** 9. Remove the four (4) screws holding the A108 HBTS/VITS to the A18 PCB. 10. Pull the A108 HBTS/VITS straight up about 10 mm (~3/8") until the pins clear the A18 PCB sockets. 11. Disconnect the two coaxial cables from the port modules. 12. Disconnect the two coaxial cables from the A108 HBTS/VITS and set the cables aside. 13. Remove the A108 HBTS/VITS module and set aside.

Figure 12-6. A108 HBTS/VITS General Removal Procedure (2 of 2)

Procedure

Caution	Do not perform any RF Deck procedures unless the instrument is turned off and disconnected from AC Power. Damage to RF components may occur if certain inputs/outputs are removed with live RF power.

1. If only the A108 HBTS/VITS is to be replaced, continue with the common procedures immediately below. If removing this module for access to other components, skip ahead to Step #7 - Identify the A108 HBTS/VITS location.

Common Procedures

2. Prepare work area, work surface, and observe safety issues.

- See Section 7-4 "Common - Prepare Work Area and Safety" on page 7-9.

3. Remove Outer Cover.

- See Section 7-5 "Common - Remove Outer Cover" on page 7-10.

4. Remove Inner Top Cover.

- See Section 7-6 "Common - Remove Inner Cover" on page 7-13.

5. The Front Panel can stay in place.

6. Position the instrument so that it is upside down, with the RF Deck up.

Remove the A108 HBTS/VITS

7. Identify the A108 HBTS/VITS location.

- Figure 12-1, "MS4642A 20 GHz VNA - RF Deck - A18 Module and PCB" on page 12-3
- Figure 12-2, "MS4644A 40 GHz VNA - RF Deck - A18 Modules and PCB" on page 12-4
- Figure 12-3, "MS4645A 50 GHz and MS4647A 70 GHz VNAs - RF Deck - A18 PCB Modules" on page 12-5

Branch Point

8. Depending on the instrument model number, do one of the following steps:
   - If a MS4642A, skip ahead to Step #9 - Remove the MS4642A A108 HBTS.
   - If a MS4644A, skip ahead to Step #12 - Remove the MS4644A A108 HBTS.
   - If a MS4645A / MS4647A, skip ahead to Step #17 - Remove the MS4645A / MS4647A A108 VITS.

Remove the MS4642A A108 HBTS

9. Remove the MS4642A A108 HBTS.
10. Remove the semi-rigid coaxial cable from the rear of the A108 HBTS and bend it slightly out of the way. The cable connects to the rear panel.
11. Skip ahead to Step #23 - Loosen A108 Connections.

Remove the MS4644A A108 HBTS

12. Remove the MS4644A A108 HBTS.
13. Remove the semi-rigid coaxial cable between the A108 HBTS and the A112 SDM.
14. There is no signal/power cable on the A108 HBTS.
15. Loosen the four connectors holding the two semi-rigid coaxial cables to the A108.
16. Skip ahead to Step #23 - Loosen A108 Connections.

Remove the MS4645A / MS4647A VITS

17. Remove the MS4645A / MS4647A A108 VITS.
18. Remove the A114 Switched Quadrupler Module (A114 SQM) as described above in Section 12-6 “Remove A114 SQM – ND70099 – 60-327” on page 12-11.
19. Remove the semi-rigid coaxial cable between the A112 SDM and the A108 VITS.
20. There is no signal/power cable on the A108 VITS.
21. Loosen the four connectors holding the two semi-rigid coaxial cables to the A108.
22. Continue below with Step #23 - Loosen A108 Connections.

Loosen A108 Test Port Connections

23. Loosen A108 Connections.
24. Loosen (but do not remove) the four (4) semi-rigid coaxial cable connections between the A108 HBTS/VITS and the front panel test ports.
    - The test port name and module connected to varies depending on the instrument model number and installed options.
    - In Chapter 13, “RF Deck Bottom Side Port Modules”, see the following figures for representative port module configurations. Note that not all combinations are shown:
      - Figure 13-1, “MS4642A - Standard No Options - Test Port Group Modules” on page 13-7
      - Figure 13-2, “MS4644A - Standard No Options - Test Port Group Modules” on page 13-9
      - Figure 13-3, “MS4645A / MS4647A - Standard No Options - Test Port Group Modules” on page 13-11
      - Figure 13-4, “MS4645A / MS4647A - Option 051 - Front Panel Loops” on page 13-13
      - Figure 13-5, “MS4645A / MS4647A - Option 061 - Loops and Two Attenuators” on page 13-15
      - Figure 13-6, “MS4645A / MS4647A - Option 062 - Loops and Four Attenuators” on page 13-17
25. Loosen and remove the four (4) pan head Phillips M3 × 8 mm A108 mounting screws.

Pull A108 HBTS/VITS Straight Up

26. Gently lift the A108 straight up about 10 mm (~3/8”) until the A108 pins are free from the A18 sockets.

27. When free, remove the four connectors holding the two semi-rigid coaxial cables in place. Set the two cables aside.

28. Remove and set aside the A108.

12-10 Prepare Replacement A108 HBTS/VITS

There are no preparation requirements for either version of the A108 HBTS/VITS.

12-11 Install A108 HBTS/VITS – ND70092 or ND70093

Use this procedure to install an A108 HBTS/VITS after it has been replaced or removed to provide access for another component.

Parts and Applicability

- MS4642A / MS4644A with any combination of options:
  - A108 High Band Transfer Switch (A108 HBTS), 40 GHz – ND70092 – 66221
- MS4645A / MS4647A with any combination of options:
  - A108 V Integrated High Band Transfer Switch (A108 VITS), 70 GHz – ND70093 – 66619

Procedure

Prerequisites

1. For MS4645A and MS4647A VNA, it is assumed that the A114 SQM has been removed in a prior procedure.
   - See Section 12-6 “Remove A114 SQM – ND70099 – 60-327” on page 12-11 above.
2. For MS4644A, MS4645A, and MS4647A VNAs, it is also assumed that the semi-rigid coaxial cable between the A108 HBTS/VITS and the A112 SDM has been removed. If not, remove it now.
   - See Section 12-3 “Remove A112 SDM – ND70098 – 59772” on page 12-7
3. Position the A108 HBTS/VITS over its mounting position on the A18 PCB.
4. Do not insert the A108 into its mounting sockets on the A18 PCB.

Install Coaxial Cables

5. Install the two semi-rigid coaxial cables between the A108 HBTS/VITS and the port module groups towards the front panel.
   - The A108 J3 connector is oriented towards the left side Test Port 2 modules. The exact module connection depends on the model number and installed options.
   - The A108 J4 connector is oriented towards the right side Test Port 1 modules. The exact module connection depends on the A108 part, the VNA model number, and installed options.
6. Route the two A108 coaxial cables under the crossing coaxial cables so they are closest to the RF Deck chassis.
7. Make sure each coaxial connector is correctly aligned and threaded.

Press the A108 into the A18 PCB

8. Press the A108 into its mounting sockets on the A18 PCB. The distance is about 10 mm (~3/8”).
   - The A108 HBTS has four (4) pins that connect to the A18 PCB sockets located at (from left to right) E6, E4, E3, and E5.
   - The A108 VITS has six (6) pins that connect to the A18 PCB sockets above and to E2 and E1.

Insert Mounting Screws and Torque Connectors

9. Insert the four (4) pan head Phillips M3 × 8 mm A108 mounting screws. When all are correctly threaded, tighten.
10. Torque the four connectors on the two semi-rigid coaxial cables to the port group modules to 8 lbf · in.

Install the A114 SQM

11. If a MS4642A or MS4644A, skip ahead to Step #13 - Next step options for the A108 HBTS/VITS installation.

12. If a MS4645A or MS4647A VNA, install the A114 SQM.

- See Section 12-8 “Install A114 SQM – ND70099 – 60-327” on page 12-15 above.

Next Steps

13. Next step options for the A108 HBTS/VITS installation.

- The next step options for the A108 HBTS/VITS depend on the installation purpose.
- To install other A18 PCB components, see:
  - Section 12-8 “Install A114 SQM – ND70099 – 60-327” on page 12-15.
- If only replacing the A108 HBST/VITS, skip ahead to Step #14 - Complete the A108 HBTS/VITS installation.

Completion Procedures

14. Complete the A108 HBTS/VITS installation.

15. Checking that all connections are made and correctly torqued.

16. Position the instrument so that it is right side up.

17. If removed, install the Front Panel.

- See Section 10-6 “Install the Phase 1 Front Panel Assembly” on page 10-19.

18. Install the Inner Top Cover.

- See Section 7-7 “Common - Install Inner Cover” on page 7-15.

19. Install the Outer Cover.

- See Section 7-8 “Common - Install Outer Cover” on page 7-16.

12-12 Remove A133 RF Coupler Module – No ND – 72237

Parts and Applicability

- A133 20-40 GHz RF Coupler Module – No ND – 72237
  - MS4647A with Option 080/081:

Procedure

Caution	Do not perform any RF Deck procedures unless the instrument is turned off and disconnected from AC Power. Damage to RF components may occur if certain inputs/outputs are removed with live RF power.

1. If only the A133 20-40 GHz Coupler Module is to be replaced, continue with the common procedures immediately below. If removing this module for access to other components, skip ahead to Step #7 - Identify the A108 HBTS/VITS location.

Common Procedures

2. Prepare work area, work surface, and observe safety issues.
   - See Section 7-4 “Common - Prepare Work Area and Safety” on page 7-9.
3. Remove Outer Cover.
   - See Section 7-5 “Common - Remove Outer Cover” on page 7-10.
4. Remove Inner Top Cover.
   - See Section 7-6 “Common - Remove Inner Cover” on page 7-13.
5. The Front Panel can stay in place.
6. Position the instrument so that it is upside down, with the RF Deck up.

Remove the A133 20-40 GHz RF Coupler Module

7. Identify the A133 20-40 GHz RF Coupler location.
   - Figure 12-4, “RF Deck Bottom Side Modules - MS4647A with Option 080/081” on page 12-6.
8. Using two 8 mm wrenches, undo the semi rigid coaxial cable connected to the rear facing A133 J3 connector and bend it slightly out of the way. The cable routes to the RF Deck Front Panel RF connector.
9. Using two 8 mm wrenches, undo the semi rigid coaxial cable connected to the right side A133 J2 connector and bend it slightly out of the way. The cable routes to the A108 VITS mounted on the A18 PCB,
10. Using two 8 mm wrenches, undo the final connection between the A133 Coupler J1 connector and the A112 Switched Doubler Module.
11. Remove the A133 Coupler and either set aside or replace it using the two procedures below.

12-13 Prepare A133 20-40 GHz RF Coupler Module – No ND – 72237

There are no preparation requirements for the A133 Coupler.

12-14 Install A133 RF Coupler Module – No ND – 72237

Use this procedure to install an existing or replacement A113 20-40 GHz module into the A18 RF Control PCB Assembly.

Parts and Applicability

- A133 20-40 GHz RF Coupler Module – No ND – 72237
  - MS4647A with Option 080/081:

Procedure

Caution	Do not perform any RF Deck procedures unless the instrument is turned off and disconnected from AC Power. Damage to RF components may occur if certain inputs/outputs are removed with live RF power.

1. Position the A133 SQM its J1 connector facing the A112 Switched Doubler Module and its center J3 connector facing the Rear Panel.
   - See Figure 12-4, “RF Deck Bottom Side Modules - MS4647A with Option 080/081” on page 12-6 for location and orientation.
2. Align, thread, and then finger tighten the connection between the A112 and the A133. Do not torque.
3. Align, thread, and then finger tighten the semi rigid coaxial cable coming from the A108 VITS. Do not torque.
4. Align, thread, and then finger tighten the semi rigid coaxial cable coming from the RF Deck Front Panel RF connector. Do not torque.

Torque RF Connectors

5. Once alignment and correct threading is established between the A133 and its surrounding modules and cables, use a 5/16” end wrench to hold the fixed portion of each connector. Use a 5/16” torque end wrench set to 8 lbf · in to torque each connection.

Next Steps

6. The next step options for the A133 Coupler depend on the installation purpose:
   - To install other A18 PCB components, see the following:
     - Section 12-5 “Install A112 SDM – ND70098 – 59772” on page 12-9
     - Section 12-8 “Install A114 SQM – ND70099 – 60-327” on page 12-15
     - Section 12-11 “Install A108 HBTS/VITS – ND70092 or ND70093” on page 12-20
   - If only replacing the A133 Coupler, skip ahead to Step #7 - A133 Coupler installation completion.

Completion Procedures

7. A133 Coupler installation completion.
8. Check that all connections are made and correctly torqued.
9. Position the instrument so that it is right side up.
10. If removed, install the Front Panel.
    - See Section 10-6 “Install the Phase 1 Front Panel Assembly” on page 10-19.
11. Install the Inner Top Cover.
    - See Section 7-7 “Common - Install Inner Cover” on page 7-15.
12. Install the Outer Cover.
    - See Section 7-8 “Common - Install Outer Cover” on page 7-16.

12-15 Remove A18 RF Control PCB – ND70068 – 61929-3

Use this procedure to remove the A18 RF Control PCB Assembly (A18 PCB) from the RF Deck Bottom Side. In general, the only reason to remove the A18 PCB is to replace it.

Part and Applicability

- A18 RF Control PCB Assembly (A18 PCB) – ND70068 – 61929-3
- This PCB is used on all model numbers with any combination of options.

Identification - A18 PCB Connector Locations

The figure below (Figure 12-2) shows the A18 PCB connector locations.

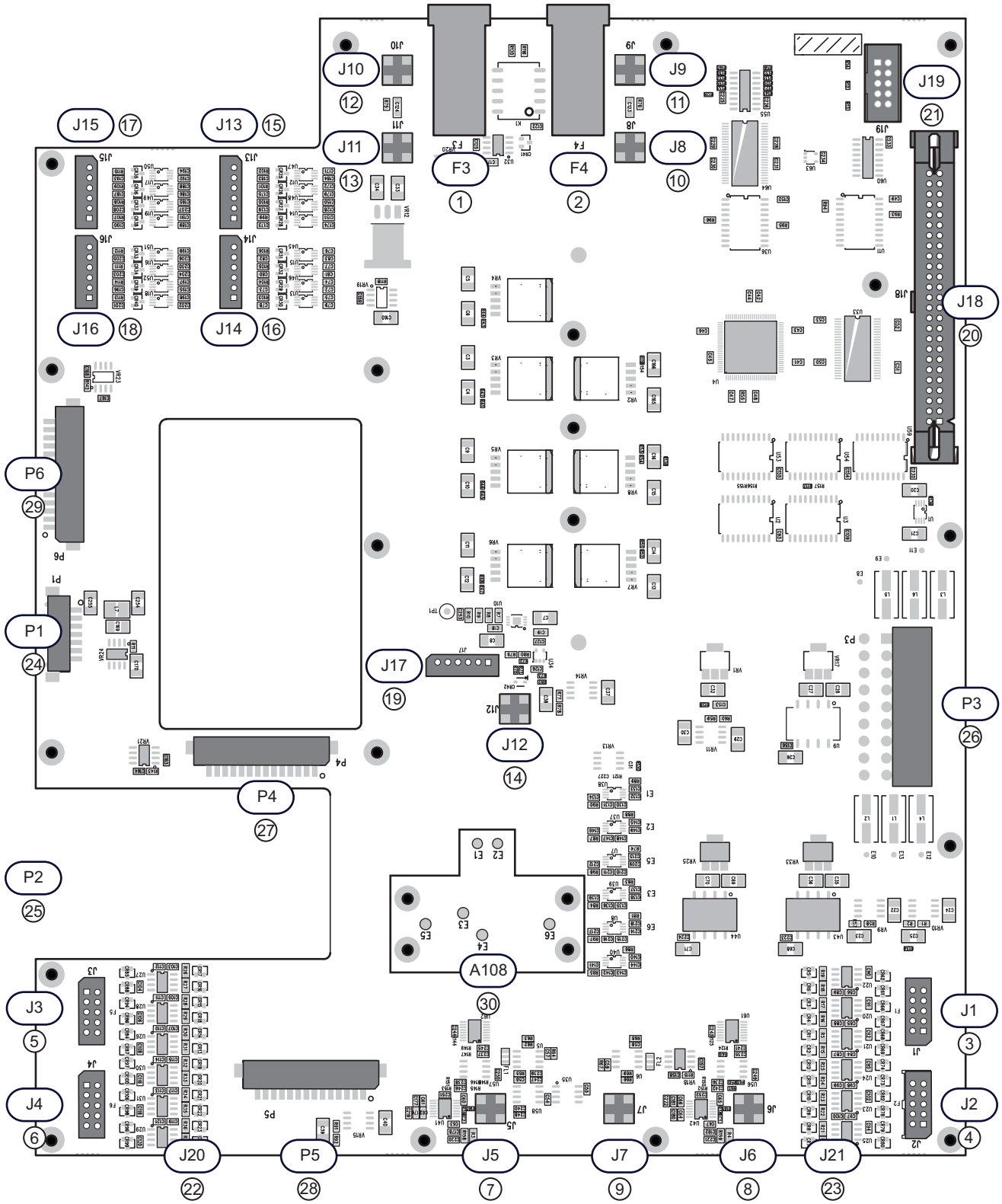

Figure 12-7. A18 RF Control PCB Assembly – ND70068 – 61929-3 (1 of 2)

Orientation

The figure above is inverted to show the orientation when viewed from the front panel, located at the figure bottom. The rear panel is located at the figure top.

Fuses

1. A18 PCB F4 – Bias Fuse Holder. No cable.
2. A18 PCB F5 – Bias Fuse Holder. No cable.

Connectors

3. A18 PCB J1 – Option 061 or 062 only. Ribbon cable to the A121 High Band Step Attenuator Module.
4. A18 PCB J2 – Option 062 only. Ribbon cable to the A120 High Band Step Attenuator Module.
5. A18 PCB J3 – Option 062 only. Ribbon cable to the A122 High Band Step Attenuator Module.
6. A18 PCB J4 – Option 061 or 062 only. Ribbon cable to the A123 High Band Step Attenuator Module.
7. A18 PCB J5 – MCX coaxial cable to pins on the A110 Port 2 Level Detector Module.
8. A18 PCB J6 – MCX coaxial cable to pins on the A109 Port 1 Level Detector.
9. A18 PCB J7 – Coaxial cable to the middle A13 module connector J12
10. A18 PCB J8 – MCX coaxial cable to rear panel BNC P1.
11. A18 PCB J9 – MCX coaxial cable to pins on the A128 Diplexer/Bias Tee Module.
12. A18 PCB J10 – MCX coaxial cable to pins on the A129 Diplexer/Bias Tee Module.
13. A18 PCB J11 – MCX coaxial cable to the rear panel BNC P2.
14. A18 PCB J12 – Coaxial cable to the middle A13 module connector J15.
15. A18 PCB J13 – Option 062 only. Ribbon cable to pins on the A126 Low Band Attenuator Module.
16. A18 PCB J14 – Option 061 or 062 only. Ribbon cable to pins on the A127 Low Band Attenuator Module.
17. A18 PCB J15 – Option 061 or 062 only. Ribbon cable to pins on the A125 Low Band Attenuator Module.
18. A18 PCB J16 – Option 062 only. Ribbon cable to pins on the A124 Low Band Attenuator Module.
19. A18 PCB J17 – SQM Bias and Control Cable.
20. A18 PCB J18 – Cable harness to Motherboard 2 PCB bottom side P42 RF Control connector.
21. A18 PCB J19 – Unused.
22. A18 PCB J20 – 3-pin header connector harness to heater chip for the A110 Port 2 Level Detector Module.
23. A18 PCB J21 – 3-pin header connector harness to heater chip for the A109 Port 1 Level Detector Module.

Plugs

24. A18 PCB P1 – Ribbon cable to the A115 Low Band Switch Module J3 connector.
25. A18 PCB P2 – Removed from PCB.
26. A18 PCB P3 – Multi-pin connector cable to Motherboard 2 PCB bottom side RF Power P41 connector
27. A18 PCB P4 – Ribbon cable to the A112 Switched Doubler Module.
28. A18 PCB P5 – Ribbon cable to the A111 LO Distribution Module
29. A18 PCB P6 – Ribbon cable to the A113 5-20 GHz Doubler Module J3 connector.
30. A108 – Sockets and mounting holes for A108 HBTS/VITS

Figure 12-7. A18 RF Control PCB Assembly – ND70068 – 61929-3 (2 of 2)

Procedure

Common Procedures

1. If replacing just the A18 RF Control PCB Assembly, do the common procedure steps starting with Step #2 - Prepare work area, work surface, and observe safety issues. If the RF Deck Bottom Side is already accessible, skip ahead to Step #8 - Remove the MS4642A A108 HBTS.
2. Prepare work area, work surface, and observe safety issues.
   - See Section 7-4 “Common - Prepare Work Area and Safety” on page 7-9.
3. Remove Outer Cover.
   - See Section 7-5 “Common - Remove Outer Cover” on page 7-10.

4. Remove Inner Top Cover.
   - See Section 7-6 “Common - Remove Inner Cover” on page 7-13.
5. The Front Panel can stay in place.
6. Position the instrument so that it is upside down, with the RF Deck up.
7. Depending on the model number, do one of the procedure steps below.
   - If a MS4642A, skip ahead to Step #8 - Remove the MS4642A A108 HBTS.
   - If a MS4644A, skip ahead to Step #10 - Remove the MS4644A A112 SDM and A108 HBTS.
   - If a MS4645A / MS4647A, skip ahead to Step #12 - Remove the MS4645A / MS4647A A112 SDM, A114 SQM, A108 VITS, and, if equipped, the MS4647A-080/081 A133 Coupler.

Remove MS4642A A18 Modules

8. Remove the MS4642A A108 HBTS.
   - See Section 12-9 “Remove A108 HBTS/VITS Module – ND70092 or ND70093” on page 12-16 above.
9. Skip ahead to Step #14 - Disconnect the A18 PCB cables.

Remove MS4644A A18 Modules

10. Remove the MS4644A A112 SDM and A108 HBTS.
    - See Section 12-3 “Remove A112 SDM – ND70098 – 59772” on page 12-7 above.
    - See Section 12-9 “Remove A108 HBTS/VITS Module – ND70092 or ND70093” on page 12-16 above.
11. Skip ahead to Step #14 - Disconnect the A18 PCB cables.

Remove MS4645A / MS4647A A18 Modules

12. Remove the MS4645A / MS4647A A112 SDM, A114 SQM, A108 VITS, and, if equipped, the MS4647A-080/081 A133 Coupler.
    - See Section 12-3 “Remove A112 SDM – ND70098 – 59772” on page 12-7 above.
    - See Section 12-6 “Remove A114 SQM – ND70099 – 60-327” on page 12-11 above.
    - See Section 12-9 “Remove A108 HBTS/VITS Module – ND70092 or ND70093” on page 12-16 above.
    - See Section 12-12 “Remove A133 RF Coupler Module – No ND – 72237” on page 12-22 above.
13. Skip ahead to Step #14 - Disconnect the A18 PCB cables.

Disconnect A18 Cables

14. Disconnect the A18 PCB cables.
15. Disconnect the remaining power and signal cables from the A18 PCB.
    - See Figure 12-7, “A18 RF Control PCB Assembly – ND70068 – 61929-3” on page 12-25 above for the cable and connector listing.

Remove Hardware

16. Remove the 20 pan head Phillips M3 × 8 mm screws holding the A18 PCB in place.
17. The PCB standoffs are attached to the RF Deck chassis.
18. Taking care to not damage the rear panel semi-rigid coaxial cables, lift the PCB up by the front edge, and then out of the chassis and set aside.

12-16 Prepare Replacement A18 PCB – ND70068 – 61929-3

There are no preparation procedures required for installing a new A18 PCB.

12-17 Install A18 RF Control PCB – ND70068 – 61929-3

This procedure describes how to install the A18 RF Control PCB Assembly (A18 PCB) into RF Deck bottom side. In general, the only reason to install the A18 PCB is after replacing it.

Part and Applicability

- A18 RF Control PCB Assembly (A18 PCB) – ND70068 – 61929-3
- This PCB is used on all model numbers with any combination of options.

Procedure

Assumptions

1. This procedure assumes the A18 PCB has been removed, and the instrument chassis is positioned upside down with the RF Deck Bottom Side accessible.

Place the A18 PCB

2. Place the A18 PCB into the chassis by first inserting the rear side identified by the two black Bias Fuse holders.
3. Taking care to not damage the rear panel loops, move the PCB into position and then lower the front edge onto the chassis-mounted standoffs.
4. Insert and correct thread the 20 pan head Phillips M3 × 8 mm screws holding the A18 PCB in place. Do not tighten.
5. Once all screws are inserted, tighten to specifications. Best practices recommend working from the A18 PCB center out towards the edges, tightening in two passes.
6. Connect the power and signal cables.
   - See Figure 12-7, “A18 RF Control PCB Assembly – ND70068 – 61929-3” on page 12-25 above for connector locations when viewed from the front panel.

Branch Point

7. Do one of the steps below depending on the instrument model:
   - If a MS4642A, skip ahead to Step #8 - Install the MS4642A A108 HBT.
   - If a MS4644A, skip ahead to Step #10 - Install the MS4644A A108 HBTS and A112 SDM.
   - If a MS4645A / MS4647A, skip ahead to Step #14 - Install the MS4644A A108 VITS, A114 SQM, and A112 SDM.

Install MS4642A A108 HBTS

8. Install the MS4642A A108 HBT.
   - See Section 12-11 “Install A108 HBTS/VITS – ND70092 or ND70093” on page 12-20 above.
9. Skip ahead to Step #20 - Next step options for the A18 PCB installation.

Install MS4644A A108 HBTS and A112 SDM

10. Install the MS4644A A108 HBTS and A112 SDM.

11. Install the A108 HBTS.

- See Section 12-11 “Install A108 HBTS/VITS – ND70092 or ND70093” on page 12-20 above.

12. Install the A112 SDM.

- See Section 12-5 “Install A112 SDM – ND70098 – 59772” on page 12-9 above.

13. Skip ahead to Step #20 - Next step options for the A18 PCB installation.

Install MS4645A / MS4647A A108 VITS, A114 SQM, and A112 SDM

14. Install the MS4644A A108 VITS, A114 SQM, and A112 SDM.

15. Install the A108 VITS.

- See Section 12-11 “Install A108 HBTS/VITS – ND70092 or ND70093” on page 12-20 above.

16. Install the A114 SQM.

- See Section 12-11 “Install A108 HBTS/VITS – ND70092 or ND70093” on page 12-20 above.

17. Install the A112 SDM.

- See Section 12-5 “Install A112 SDM – ND70098 – 59772” on page 12-9 above.

18. If the VNA is a MS4647A with Option 080/081 Broadband equipped, install the A133 20-40 GHz Coupler Module.

- See Section 12-14 “Install A133 RF Coupler Module – No ND – 72237” on page 12-23 above.

19. Skip ahead to Step #20 - Next step options for the A18 PCB installation.

Next Steps

20. Next step options for the A18 PCB installation.

- The next step options for the A18 PCB depend on the installation purpose.
- To install other A18 PCB components, see:
  - Section 12-8 “Install A114 SQM – ND70099 – 60-327” on page 12-15.
- If only replacing the A18 PCB, skip ahead to Step #21 - A18 PCB installation completion.

Completion Procedures

21. A18 PCB installation completion.

22. Check that all connections are made and correctly torqued.

23. Position the instrument so that it is right side up.

24. If removed, install the Front Panel.

- See Section 10-6 “Install the Phase 1 Front Panel Assembly” on page 10-19.

25. Install the Inner Top Cover.

- See Section 7-7 “Common - Install Inner Cover” on page 7-15.

26. Install the Outer Cover.

- See Section 7-8 “Common - Install Outer Cover” on page 7-16.

Chapter 13 — RF Deck Bottom Side Port Modules

13-1 Introduction

This chapter describes how to remove, prepare, and replace the port group modules on the RF Deck Bottom Side. Port groups modules are those between the A18 RF Control PCB Assembly located towards the rear of the RF Deck Bottom Side and the front panel.

Port Group Definition

As summarized in Chapter 11 in Section 11-13, “RF Deck Bottom Side Port Group Modules” on page 11-16 above, the port group modules comprise the RF Deck Bottom Side modules located between the A18 RF Control PCB Assembly and the RF Deck Front Panel.

Number of Modules in a Port Group

The number of modules in a port group varies depending on the model number, the installed option, and the port number. A port group can have from one (1) to seven (7) modules and components.

A108 Module

For purposes of this chapter, the A108 High Band Transfer Switch (A108 HBTS for MS4642A / MS4644A) and the A108 V Integrated High Band Transfer Switch (A108 VITS for MS4645A / MS4647A) are considered to be a port group module and component of the indicated port group. Where the procedure can refer to either component, the module is referenced as the A108 HBTS/VITS. The module part numbers are:

- MS4642A / MS4644A: A108 High Band Transfer Switch, 40 GHz – ND70092 – 66221
- MS4645A / MS4647A: A108 V Integrated High Band Transfer Switch, 70 GHz – ND70093 – 66619

Although the A108 HBTS/VITS is considered a port group module, its removal and installation is covered in detail in Chapter 12 — RF Deck Bottom Side A18 Modules and PCB. The following sections cover the A108 procedures:

- Section 12-9, “Remove A108 HBTS/VITS Module – ND70092 or ND70093” on page 12-16
- Section 12-10, “Prepare Replacement A108 HBTS/VITS” on page 12-20
- Section 12-11, “Install A108 HBTS/VITS – ND70092 or ND70093” on page 12-20

Test Port Adapter

Also for purposes of this chapter, the Test Port Adapter is also considered a member of the Test Port 2 and the Test Port 1 port groups.

- MS4642A / MS4644A: Test Port Adapter K Connector – No ND – 34YK50C
- MS4645A / MS4647A: Test Port Adapter V Connector – No ND – 34YV50C

In all cases, the adapters must be removed to service the underlying Test Port Couplers:

- MS4642A / MS4644A: A104 Test Coupler, 40 GHz – No ND – 66480
- MS4645A / MS4647A: A104 Test Coupler, 70 GHz – No ND – 66245
- MS4642A / MS4644A: A106 Test Coupler, 40 GHz – No ND – 66480
- MS4645A / MS4647A: A106 Test Coupler, 70 GHz – No ND – 66245

Single Module Port Groups

These are port module groups that contain a single high band step attenuator. It can be removed without disassembling other port groups or any components on the A18 RF Control PCB Assembly.

Side Attached Port Group Modules

These are modules attached to a multi-module port group but can be removed without disassembling the other group modules.

RF Deck In

The port group modules can be serviced while the instrument Front Panel and the RF Deck remain in the instrument chassis. The port groups vary mechanically and electrically depending on the instrument model and equipped option.

Procedure Overview

Removal, preparation, and installation procedures vary depending on the number of modules in the group, the location of the module within the group, and whether the group is ultimately attached to the A108 High Band Transfer Switch/A108 V Integrated High Band Transfer Switch located on the A18 RF Control PCB Assembly.

Port Module Groups Mirrored

In general, when viewing the RF Deck upside down from the front panel, the left side Port 2 module groups are mirror opposites of the right side Port 1 module groups. When viewed in this orientation, the port abbreviations (from left to right) are:

- Left side ports:
    - Port 2 Test Receiver b2, Port 2 Reference Receiver a2, Test Port 2, Port 2 Source
- Right side ports:
    - Port 1 Source, Test Port 1, Port 1 Reference Receiver a1, Port 1 Test Receiver b1

Part Numbers Related to Model Numbers

Some of the modules in the port module groups also change depending on whether the instrument is a MS4642A / MS4644A or a MS4645A / MS4647A.

Note	The identification, removal, preparation, and installation procedures to use for the RF Deck Port Group Modules depend on three factors of: • The VNA Model Number: MS4642A, MS4644A, MS4645A, and MS4647A. • The installed option: Standard No Option, Option 051 Front Panel Loops, Option 061 Loops and Two Attenuators, and Option 062 Loops and Four Attenuators. • The RF Deck port number as described below. Depending on the installed option, there can be up to eight possible port groups. With the RF Deck upside down and Option 062 installed, viewed from the Front Panel, the port groups from left to right are: • Port 2 Test Receiver b2 – P2 b2 • Port 2 Reference Receiver a2 – P2 a2 • Test Port 2 – TP2 • Port 2 Source – P2 Src • Port 1 Source – P1 Src • Test Port 1 – TP1 • Port 1 Reference Receiver a1 – P1 a1 • Port 1 Test Receiver b1 – P1 b1 Note that the Port 2 a2 and Port 1 a1 ports do not have any directly connected modules. They are connected to other locations within the instrument chassis through the use of semi-rigid coaxial cables.

13-2 Chapter Organization

The following chapter organization is used.

Single Module Port Groups

Single Module Attenuator Port Groups. These are port module groups that contain a single high band step attenuator. It can be removed without disassembling other port groups.

- Section 13-15, “Option 061/062 - Port 2 b2/Port 1 b1 Attenuators - Removing” on page 13-37
- Section 13-16, “Option 061/062 - Attenuators - Preparing” on page 13-47
- Section 13-17, “Option 061/062 - Port 2 b2/Port 1 b1 Attenuators - Installing” on page 13-51

Side Attached Modules

Side-Attached Port Group Modules. These are modules attached to a multi-module port group that can be removed without disassembling the other group modules.

- Section 13-18, “Side-Attached Modules - Standard/All Options - Removing” on page 13-53
- Section 13-19, “Side-Attached Modules - Preparing” on page 13-60
- Section 13-20, “Side-Attached Modules - Installing” on page 13-61

Standard No Options - Test Port 2 Modules

- Section 13-21, “Standard No Options - Test Port 2 Modules - Removing” on page 13-62
- Section 13-22, “Standard No Options - Test Port 2 Modules - Installing” on page 13-68

Standard No Options - Test Port 1 Modules

- Section 13-23, “Standard No Options - Test Port 1 Modules - Removing” on page 13-71
- Section 13-24, “Standard No Options - Test Port 1 Modules - Installing” on page 13-76

Option 051/061/062 - Test Port 2 Modules

- Section 13-25, “Option 051/061/062 - Test Port 2 Modules - Removing” on page 13-79
- Section 13-26, “Option 051/061/062 - Test Port 2 Modules - Installing” on page 13-83

Option 051 - Port 1 Source Modules

- Section 13-27, “Option 051 - Port 1 Source Modules - Removing” on page 13-85
- Section 13-28, “Option 051 - Port 1 Source Modules - Installing” on page 13-89

Option 051/061/062 - Test Port 1 Modules

- Section 13-29, “Option 051/061/062 - Test Port 1 Modules - Removing” on page 13-91
- Section 13-30, “Option 051/061/062 - Test Port 1 Modules - Installing” on page 13-95

Option 051/061 - Test Port 2 Modules

- Section 13-31, “Option 051/061 - Port 2 Source Modules - Removing” on page 13-97
- Section 13-33, “Option 051/061 - Port 2 Source Modules - Installing” on page 13-101

Option 061 - Port 1 Source Modules

- Section 13-34, “Option 061/062 - Port 1 Source Modules - Removing” on page 13-103
- Section 13-35, “Option 061/062 - Port 1 Source Modules - Preparing” on page 13-106
- Section 13-36, “Option 061/062 - Port 1 Source Modules - Installing” on page 13-107

Option 062 - Port 2 Source Modules

- Section 13-37, “Option 062 - Port 2 Source Modules - Removing” on page 13-109
- Section 13-38, “Option 062 - Port 2 Source Modules - Preparing” on page 13-113
- Section 13-39, “Option 062 - Port 2 Source Modules - Installing” on page 13-114

Port Group Modules Completion

- Section 13-40, “RF Deck Bottom Side - Port Group Modules - Completion” on page 13-116

13-3 Modules by Instrument and Option

The four sections following provide figures that show the location of each module. The “skeleton” drawings only show the relevant modules; some assemblies, the chassis, and many cables have been omitted.

Standard No Options

The drawings for Standard No Options are for the MS4642A, MS4644A, and the MS4645A / MS4647A VNAs.

- Figure 13-1, “MS4642A - Standard No Options - Test Port Group Modules” on page 13-7
- Figure 13-2, “MS4644A - Standard No Options - Test Port Group Modules” on page 13-9
- Figure 13-3, “MS4645A / MS4647A - Standard No Options - Test Port Group Modules” on page 13-11

Option 051, 061, and 062

The drawings for Option 051, 061, and 062 are for the MS4645A / MS4647A VNAs.

- Figure 13-4, “MS4645A / MS4647A - Option 051 - Front Panel Loops” on page 13-13
- Figure 13-5, “MS4645A / MS4647A - Option 061 - Loops and Two Attenuators” on page 13-15
- Figure 13-6, “MS4645A / MS4647A - Option 062 - Loops and Four Attenuators” on page 13-17

Note that the engineering reference numbers (“A” numbers) for the modules are the same for all modules on both the MS4642A, MS4644A, and the MS4645A / MS4647A VNAs.

Use these drawings and the cross reference table that follows to locate the to-be-replaced module based on your instrument model and its equipped options.

13-4 MS4642A - Standard No Options - Port Modules

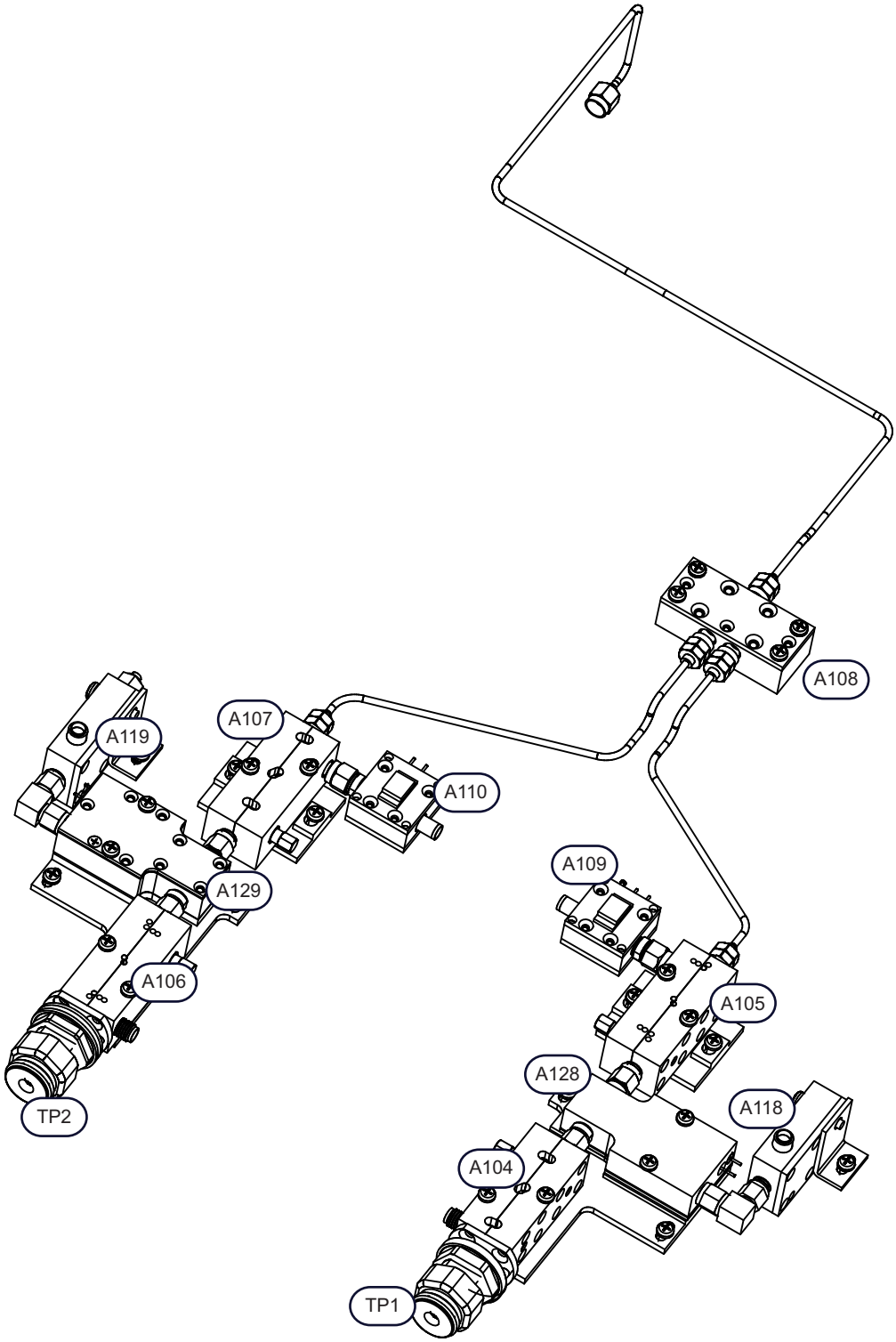

Figure 13-1. MS4642A - Standard No Options - Test Port Group Modules (1 of 2)

Test Ports (from left to right) • TP2 – Test Port 2 • TP1 – Test Port 1 **RF Control Module** Mounted on the A18 RF Control PCB Assembly (not shown): • A108 – High Band Transfer Switch, 40 GHz – ND70092 – 66221 **Test Port 2** • A107 – Reference Coupler, 40 GHz – No ND – 66487 • A110 – Port 2 Level Detector, 40 GHz, K Connector – ND70094 – 67417-1 • A129 – Diplexer/Bias Tee Module, Port 2, 40 GHz – ND70089 – 66465 or ND73941 – 74277 • A119 – Low Band Bridge – ND70078 – 64016 • A106 – Test Coupler, 40 GHz – No ND – 66480 • Test Port Adapter K Connector – No ND – 34YK50C	**Test Port 1** • A105 – Reference Coupler, 40 GHz – No ND – 66487 • A109 Port 1 Level Detector, 40 GHz, K Connector – ND70095 – 67417-2 • A128 – Diplexer/Bias Tee Module, Port 1, 40 GHz – ND70088 – 66465 or ND73940 – 74277 • A118 – Low Band Bridge – ND70078 – 64016 • A104 – Test Coupler, 40 GHz – No ND – 66480 • Test Port Adapter K Connector – No ND – 34YK50C

Figure 13-1. MS4642A - Standard No Options - Test Port Group Modules (2 of 2)

13-5 MS4644A - Standard No Options - Port Modules

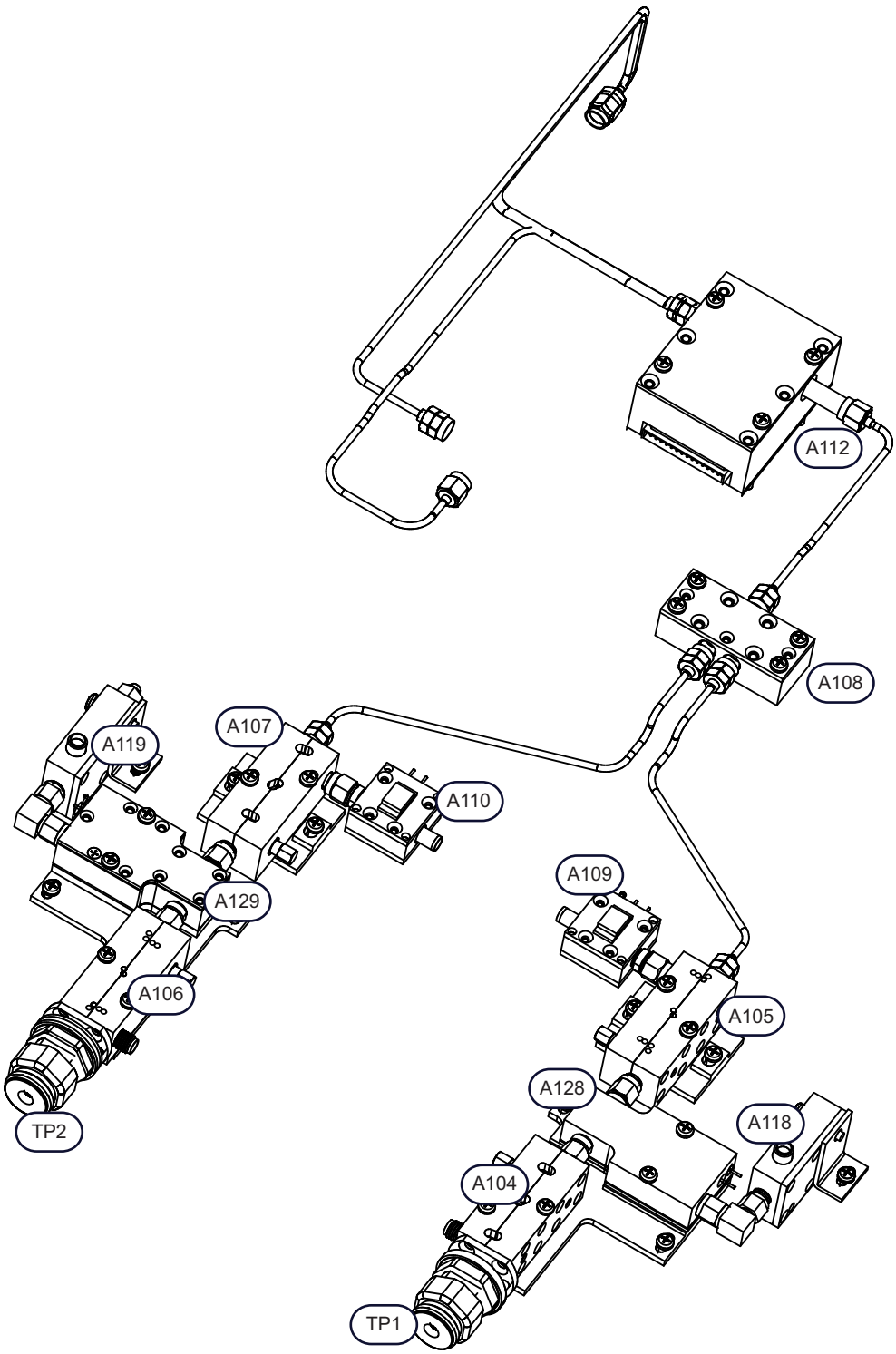

Figure 13-2. MS4644A - Standard No Options - Test Port Group Modules (1 of 2)

Test Ports (from left to right) • TP2 – Test Port 2 • TP1 – Test Port 1 **RF Control Modules** All are mounted on the A18 RF Control PCB Assembly (not shown): • A112 – Switched Doubler Module – ND70098 – 59775 • A108 – High Band Transfer Switch, 40 GHz – ND70092 – 66221 **Test Port 2** • A107 – Reference Coupler, 40 GHz – No ND – 66487 • A110 – Port 2 Level Detector, 40 GHz, K Connector – ND70094 – 67417-1 • A129 – Diplexer/Bias Tee Module, Port 2, 40 GHz – ND70089 – 66465 or ND73941 – 74277 • A119 – Low Band Bridge – ND70078 – 64016 • A106 – Test Coupler, 40 GHz – No ND – 66480 • Test Port Adapter K Connector – No ND – 34YK50C	**Test Port 1** • A105 – Reference Coupler, 40 GHz – No ND – 66487 • A109 Port 1 Level Detector, 40 GHz, K Connector – ND70095 – 67417-2 • A128 – Diplexer/Bias Tee Module, Port 1, 40 GHz – ND70088 – 66465 or ND73940 – 74277 • A118 – Low Band Bridge – ND70078 – 64016 • A104 – Test Coupler, 40 GHz – No ND – 66480 • Test Port Adapter K Connector – No ND – 34YK50C

Figure 13-2. MS4644A - Standard No Options - Test Port Group Modules (2 of 2)

13-6 MS4645A / MS4647A - Standard No Options - Port Modules

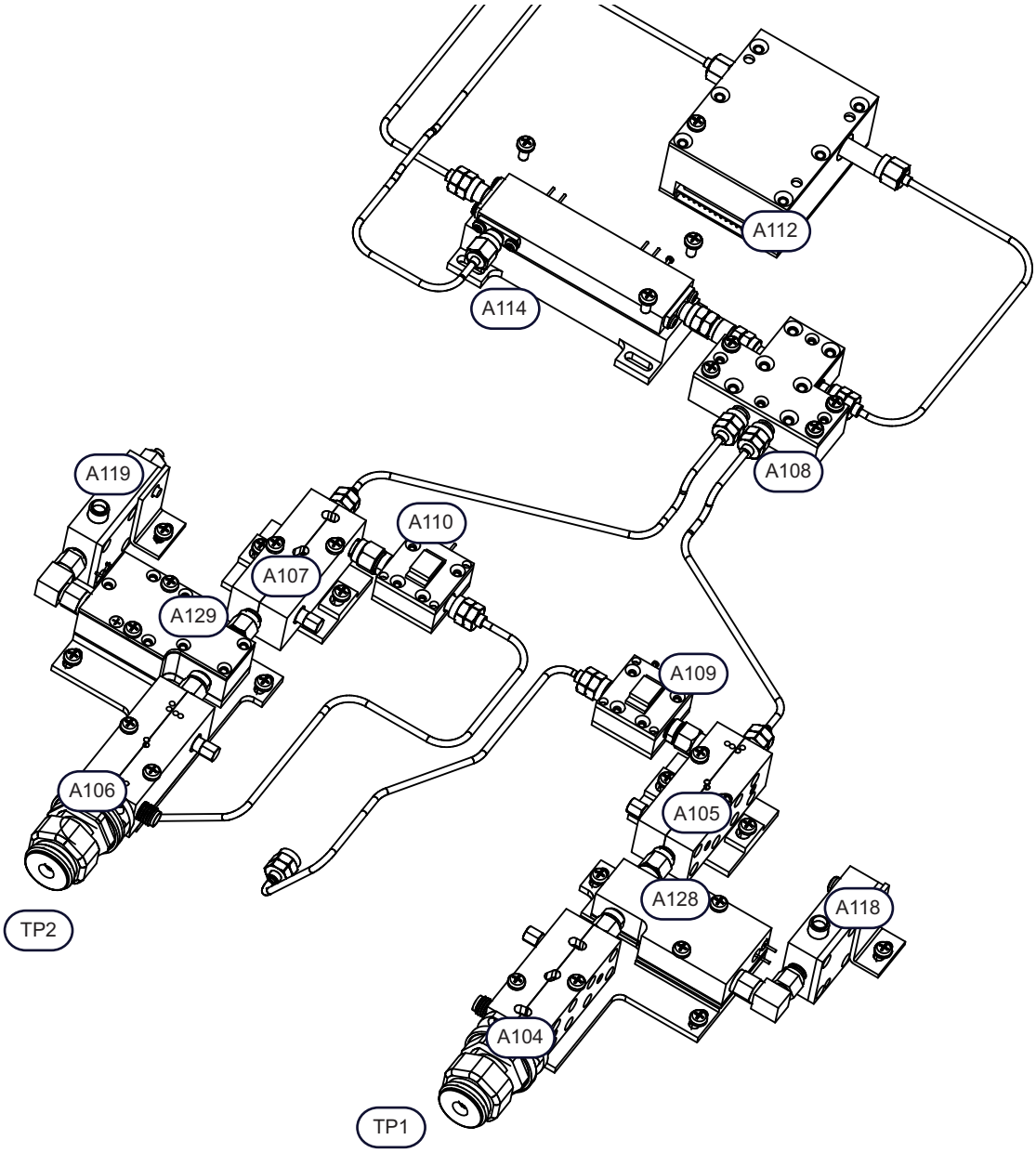

Figure 13-3. MS4645A / MS4647A - Standard No Options - Test Port Group Modules (1 of 2)

Test Ports (from left to right) • TP2 – Test Port 2 • TP1 – Test Port 1 **RF Control Modules** All are mounted on the A18 RF Control PCB Assembly (not shown) • A112 – Switched Doubler Module – ND70098 – 59775 • A108 – V Integrated Switch – ND70093 – 66619 • A114 – Switched Quadrupler Module – ND70099 – 60-327 **Test Port 2** • A107 – Reference Coupler, 70 GHz – No ND – 65270 • A110 – Port 2 Level Detector, V Connector, 70 GHz – ND70096 – 67389-1 • A129 – Diplexer/Bias Tee Module, Port 2, 70 GHz – ND73943 - 74278 • A119 – Low Band Bridge – ND70078 – 64016 • A106 – Test Coupler, V Connector, 70 GHz – No ND – 66245 • Test Port Adapter V Connector – No ND – 34YV50C	**Test Port 1** • A105 – Reference Coupler 70 GHz – No ND – 65270 • A109 – A109 Port 1 Level Detector, V Connector, 70 GHz – ND70097 – 67389-2 • A128 – Diplexer/Bias Tee Module, Port 1, 70 GHz – ND73942 - 74278 • A118 – Low Band Bridge – ND70078 – 64016 • A104 – Test Coupler, V Connector, 70 GHz – No ND – 66245 • Test Port Adapter V Connector – No ND – 34YV50C

Figure 13-3. MS4645A / MS4647A - Standard No Options - Test Port Group Modules (2 of 2)

13-7 MS4645A / MS4647A - Option 051 - Front Panel Loops

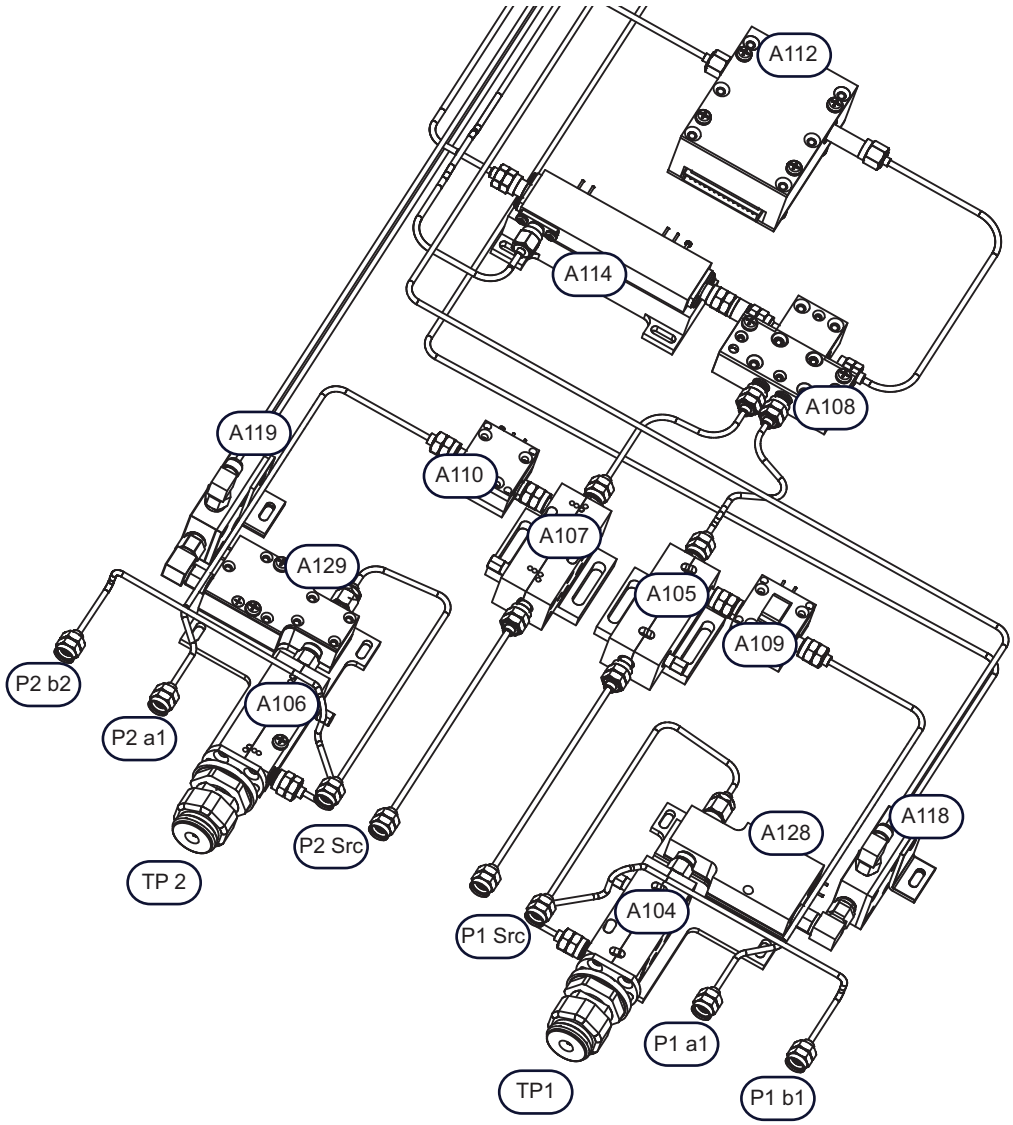

Figure 13-4. MS4645A / MS4647A - Option 051 - Front Panel Loops (1 of 2)

Test Ports (from left to right)

- P2 b2 – Port 2 Test Receiver b2 – There are no modules connected directly to Port 2 b2.
- P2 a2 – Port 2 Reference Receiver a2 – There are no modules connected directly to Port 2 a2.
- TP2 – Test Port 2
- P2 Src – Port 2 Source
- P1 Src – Port 1 Source
- TP1 – Test Port 1
- P1 a1 – Port 1 Reference Receiver a1 – There are no modules connected directly to Port 1 a1.
- P1 b1 – Port 1 Test Receiver b1 – There are no modules connected directly to Port 2 b1.

RF Control Modules

All are mounted on the A18 RF Control PCB Assembly (not shown).

- A112 – Switched Doubler Module – ND70098 – 59775
- A108 – V Integrated Switch – ND70093 – 66619
- A114 – Switched Quadrupler Module – ND70099 – 60-327

Test Port 2

- A119 – Low Band Bridge – ND70078 – 64016
- A129 – Diplexer/Bias Tee Module, Port 2, 70 GHz – ND73943 - 74278
- A106 – Test Coupler, V Connector, 70 GHz – No ND – 66245
- Test Port Adapter V Connector – No ND – 34YV50C

Port 2 Source

- A107 – Reference Coupler, 70 GHz – No ND – 65270
- A110 – Port 2 Level Detector, V Connector, 70 GHz – ND72127 – 67389-2

Port 1 Source

- A105 – Reference Coupler 70 GHz – No ND – 65270
- A109 – A109 Port 1 Level Detector, V Connector, 70 GHz – ND72126 – 67389-1

Test Port 1

- A118 – Low Band Bridge – ND70078 – 64016
- A128 – Diplexer/Bias Tee Module, Port 1, 70 GHz – ND73942 - 74278
- A104 – Test Coupler, V Connector, 70 GHz – No ND – 66245
- Test Port Adapter V Connector – No ND – 34YV50C

Figure 13-4. MS4645A / MS4647A - Option 051 - Front Panel Loops (2 of 2)

13-8 MS4645A / MS4647A - Option 061 - Loops & Two Attenuators

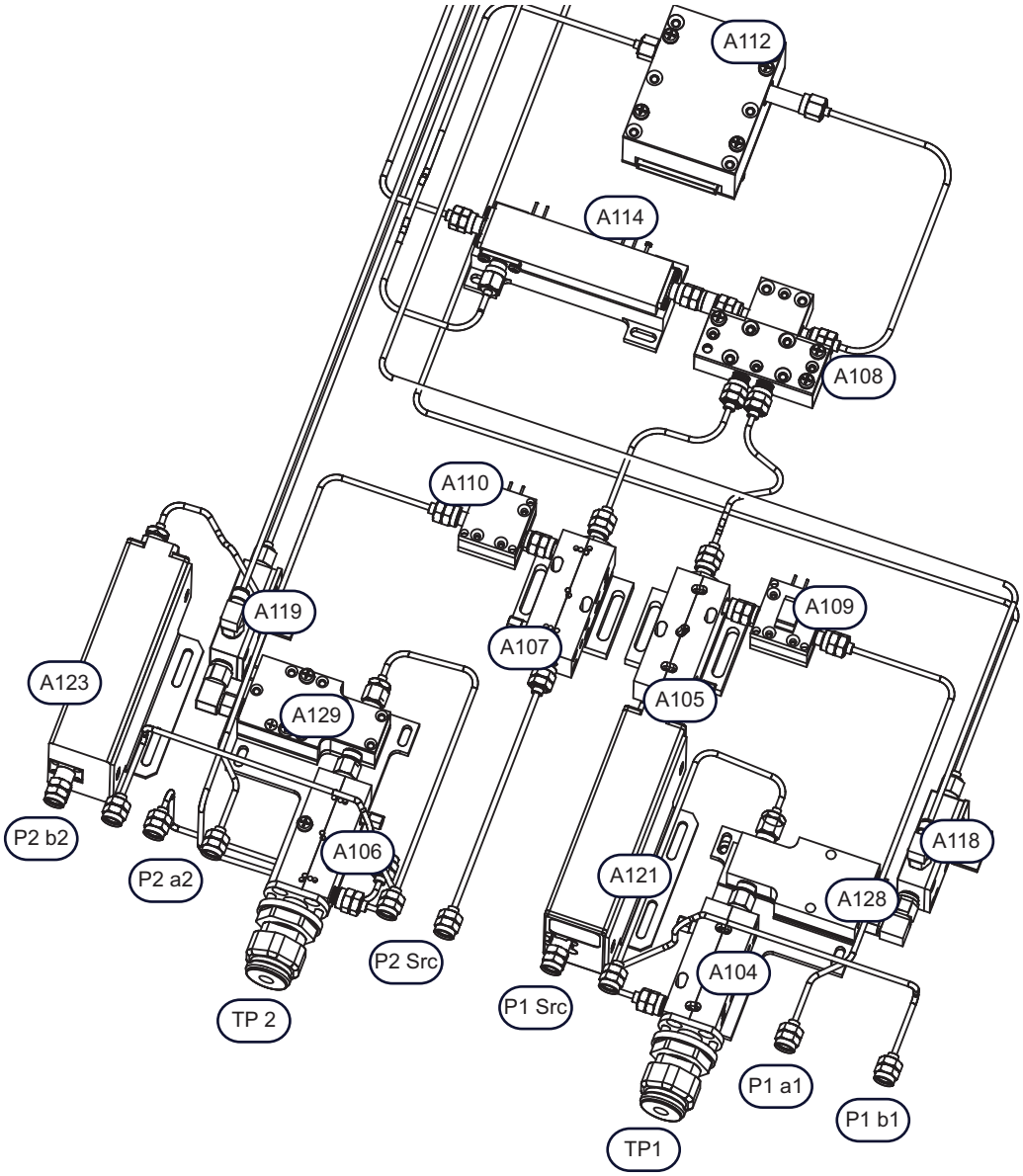

Figure 13-5. MS4645A / MS4647A - Option 061 - Loops and Two Attenuators (1 of 2)

Test Ports (from left to right)
- P2 b2 – Port 2 Test Receiver b2
- P2 a2 – Port 2 Reference Receiver a2 – There are no modules connected directly to Port 2 a2.
- TP2 – Test Port 2
- P2 Src – Port 2 Source
- P1 Src – Port 1 Source
- TP1 – Test Port 1
- P1 a1 – Port 1 Reference Receiver a1 – There are no modules connected directly to Port 1 a1.
- P1 b1 – Port 1 Test Receiver b1

RF Control Modules

All are mounted on the A18 RF Control PCB Assembly (not shown).
- A112 – Switched Doubler Module – ND70098 – 59775
- A108 – V Integrated Switch – ND70093 – 66619
- A114 – Switched Quadrupler Module – ND70099 – 60-327

Port 2 Test Receiver b2
- A123 – High Band Step Attenuator, V Connector – No ND – 66050

Test Port 2
- A119 – Low Band Bridge – ND70078 – 64016
- A129 – Diplexer/Bias Tee Module, Port 2, 70 GHz – ND73943 - 74278
- A106 – Test Coupler, V Connector, 70 GHz – No ND – 66245

Port 2 Source
- A107 – Reference Coupler 70 GHz – No ND – 65270
- A110 – Port 2 Level Detector, V Connector, 70 GHz – ND72127 – 67389-2

Port 1 Source
- A105 – Reference Coupler 70 GHz – No ND – 65270
- A109 – A109 Port 1 Level Detector, V Connector, 70 GHz – ND72126 – 67389-1
- A121 – High Band Step Attenuator, V Connector – No ND – 66050

Test Port 1
- A118 – Low Band Bridge – ND70078 – 64016
- A128 – Diplexer/Bias Tee Module, Port 1, 70 GHz – ND73942 - 74278
- A104 – Test Coupler, V Connector, 70 GHz – No ND – 66245

Figure 13-5. MS4645A / MS4647A - Option 061 - Loops and Two Attenuators (2 of 2)

13-9 MS4645A / MS4647A - Option 062 - Loops & Four Attenuators

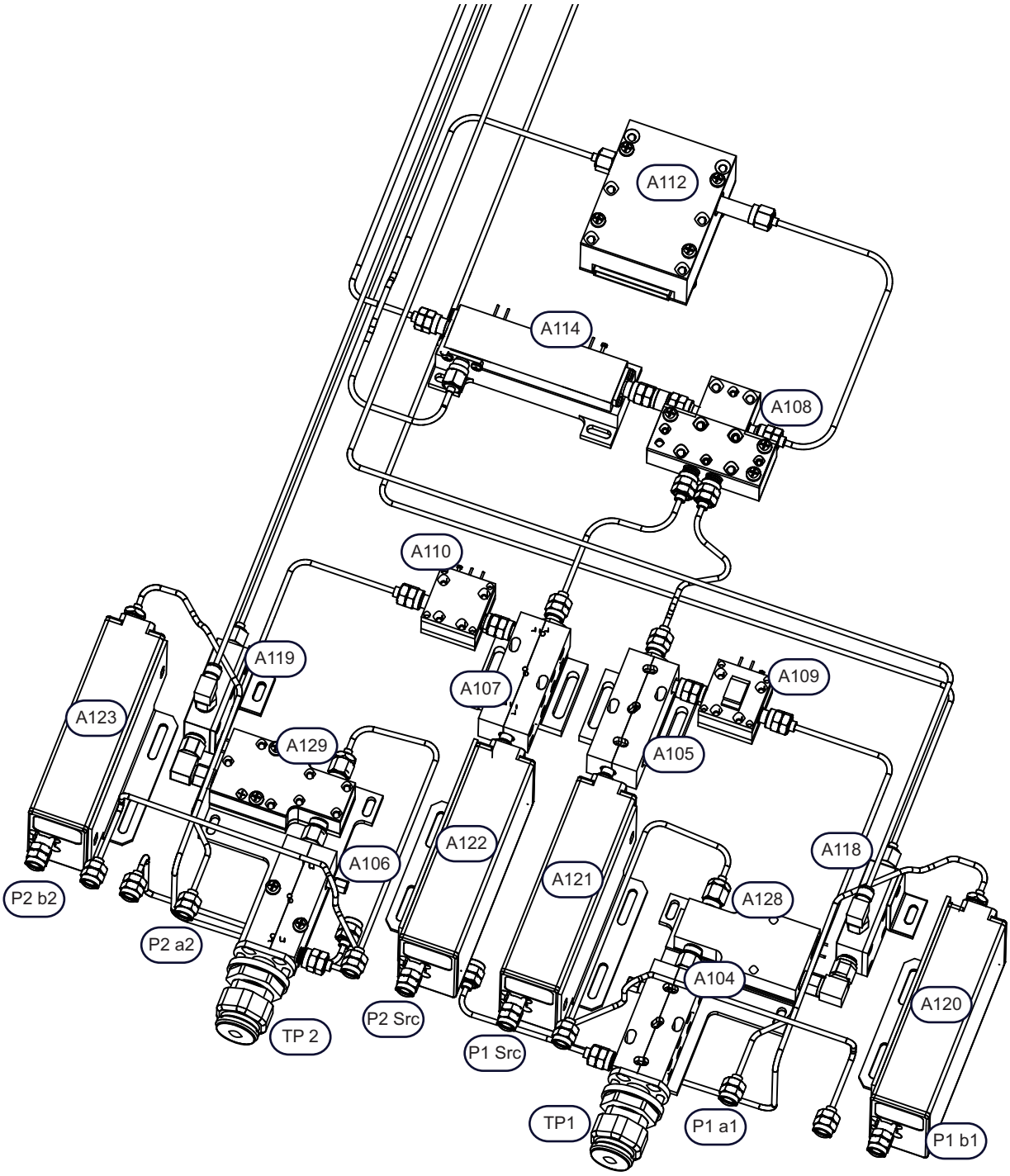

Figure 13-6. MS4645A / MS4647A - Option 062 - Loops and Four Attenuators (1 of 2)

Test Ports (from left to right)
- P2 b2 – Port 2 Test Receiver b2
- P2 a2 – Port 2 Reference Receiver a2 – There are no modules connected directly to Port 2 a2.
- TP2 – Test Port 2
- P2 Src – Port 2 Source
- P1 Src – Port 1 Source
- TP1 – Test Port 1
- P1 a1 – Port 1 Reference Receiver a1 – There are no modules connected directly to Port 1 a1.
- P1 b1 – Port 1 Test Receiver b1

RF Control Modules

All are mounted on the A18 RF Control PCB Assembly (not shown).
- A112 – Switched Doubler Module – ND70098 – 59775
- A108 – V Integrated Switch – ND70093 – 66619
- A114 – Switched Quadrupler Module – ND70099 – 60-327

Port 2 Test Receiver b2
- A123 – High Band Step Attenuator, V Connector – No ND – 66050

Test Port 2
- A119 – Low Band Bridge – ND70078 – 64016
- A129 – Diplexer/Bias Tee Module, Port 2, 70 GHz – ND73943 - 74278
- A106 – Test Coupler, V Connector, 70 GHz – No ND – 66245

Port 2 Source
- A107 – Reference Coupler 70 GHz – No ND – 65270
- A110 – Port 2 Level Detector, V Connector, 70 GHz – ND72127 – 67389-2
- A122 – High Band Step Attenuator, V Connector – No ND – 66050

Port 1 Source
- A105 – Reference Coupler 70 GHz – No ND – 65270
- A109 – A109 Port 1 Level Detector, V Connector, 70 GHz – ND72126 – 67389-1
- A121 – High Band Step Attenuator, V Connector – No ND – 66050

Test Port 1
- A118 – Low Band Bridge – ND70078 – 64016
- A128 – Diplexer/Bias Tee Module, Port 1, 70 GHz – ND73942 - 74278
- A104 – Test Coupler, V Connector, 70 GHz – No ND – 66245

Port 1 Test Receiver b1
- A120 – High Band Step Attenuator, V Connector – No ND – 66050

Figure 13-6. MS4645A / MS4647A - Option 062 - Loops and Four Attenuators (2 of 2)

13-10 Test Port 2 Module Group Assembly

The figure below shows the module and bracket assembly. The modules as shown are common to all instrument models.

VNAs with Standard No Options attach an A107 to the A129, and an A110 to the A107:

- MS4642A / MS4644A: A107 Reference Coupler, 40 GHz – No ND – 66487
- MS4645A / MS4647A: A107 Reference Coupler, 70 GHz – No ND – 65270
- MS4642A / MS4644A: A110 Port 2 Level Detector, K Connector, 40 GHz – ND70094 – 67417-1
- MS4645A / MS4647A: A110 Port 2 Level Detector, V Connector, 70 GHz – ND70096 – 67389-1

VNAs with Option 051, 061, or 062 use just the A119, A129, and A106 modules in the Test Port 2 module group.

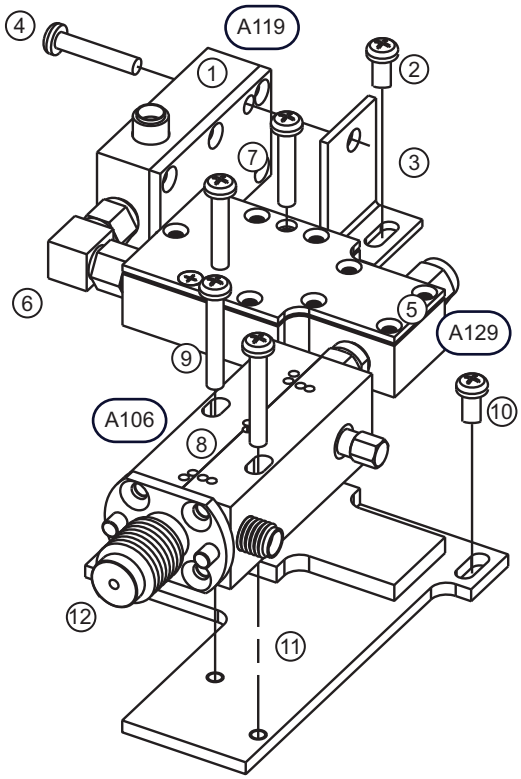

Figure 13-7. Test Port 2 - Module Group Assembly - A119, A129, and A106 (1 of 2)

A119 – Low Band Bridge Module

1. A119 Low Band Bridge
   - MS4642A / MS4644A: A119 Low Band Bridge – ND70078 – 64016
   - MS4645A / MS4647A: A119 Low Band Bridge – ND70078 – 64016
2. Pan head Phillips M3 × 8 mm bracket-to-chassis screws.
3. A119 mounting bracket.
4. Pan head Phillips M3 × 18 mm A118 module-to-bracket screws.

A129 – Diplexer/Bias Tee Module

5. A129 Diplexer/Bias Tee Module
   - MS4642A / MS4644A: A129 Diplexer/Bias Tee Module, Port 2, 40 GHz – ND73941 - 74277
   - MS4645A / MS4647A: A129 Diplexer/Bias Tee Module, Port 2, 70 GHz – ND73943 - 74278
6. RF Elbow Connector (m-m) between A119 and A129.
7. Two (2) pan head Phillips M3 × 18 mm module-to-bracket screws.

A106 – Test Port Coupler

8. A106 Test Port Coupler
   - MS4642A / MS4644A: A106 Test Coupler, 40 GHz – No ND – 66480
   - MS4645A / MS4647A: A106 Test Coupler, 70 GHz – No ND – 66245
9. Two (2) pan head Phillips M3 × 25 mm module-to-bracket screws.
10. Two (2) pan head Phillips M3 × 8 mm bracket-to-chassis screws.
11. A106 / A129 combo mounting bracket.
12. Front panel Thrust Washer, Test Port Nut, and Test Port Adapter removed. Not shown here.
    - See Figure 8-1, “Test Port Connectors and Related Hardware” on page 8-2 in Chapter 8, “External Component Procedures”

Figure 13-7. Test Port 2 - Module Group Assembly - A119, A129, and A106 (2 of 2)

13-11 A107 and A105 Reference Module/Bracket Assembly

The figure below shows the A105/A107 Reference Coupler module and bracket assembly.

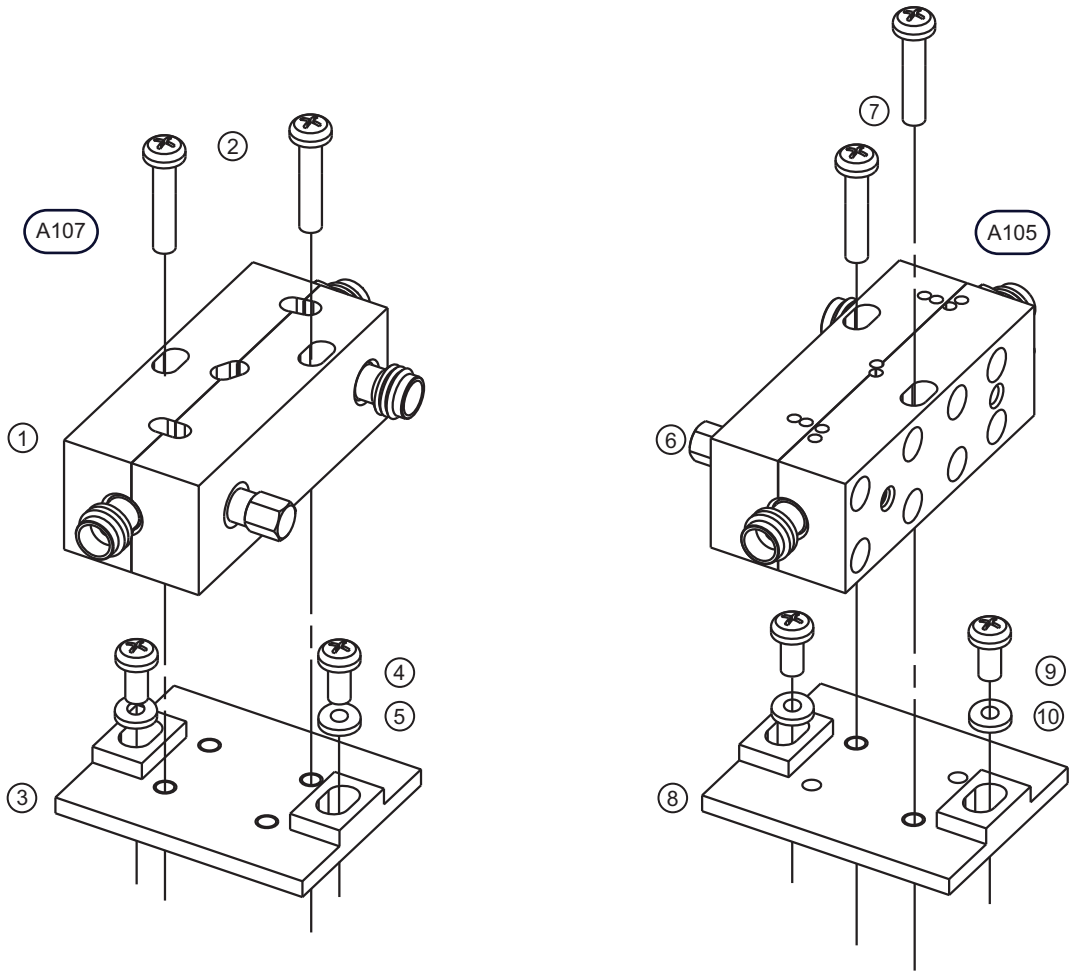

A107 – Reference Coupler	A105 – Reference Coupler
1. A107 Reference Coupler • MS4642A / MS4644A: A107 Reference Coupler, 40 GHz – No ND – 66487 • MS4645A / MS4647A: A107 Reference Coupler, 70 GHz – No ND – 65270	6. A105 Reference Coupler • MS4642A / MS4644A: A105 Reference Coupler, 40 GHz – No ND – 66487 • MS4645A / MS4647A: A105 Reference Coupler, 70 GHz – No ND – 65270
2. Two (2) pan head Phillips M3 × 20 mm module to bracket screws.	7. Two (2) pan head Phillips M3 × 20 mm module to bracket screws.
3. Module mounting bracket	8. Module mounting bracket
4. Two (2) pan head Phillips M3 × 8 mm screws	9. Two (2) pan head Phillips M3 × 8 mm screws
5. Two (2) #6 flat washers	10. Two (2) #6 flat washers

Figure 13-8. A106 and A107 Reference Coupler Modules and Mounting Brackets

On instruments with Standard No Options:

- On Test Port 2, the A107 module is attached to the A129 module and the A110 is attached to the A107. The A107 is then attached to the A108.

- On Test Port 1, the A105 module is attached to the A128 module and the A109 is attached to the A105. The A105 is then attached to the A108.

On instruments with Option 051:

- On Port 2 Source, the A107 is attached to the A108. The A110 is then attached to the A107.
- On Port 1 Source, the A105 is attached to the A108. The A109 is then attached to the A105.

On instruments with Option 061:

- On Port 2 Source, the A107 is attached to the A108. The A110 is then attached to the A107.
- On Port 1 Source, the A105 is attached to the A108. The A109 and A121 are then attached to the A105.

On instruments with Option 062:

- On Port 2 Source, the A107 is attached to the A108. The A110 and A122 are then attached to the A107.
- On Port 1 Source, the A105 is attached to the A108. The A109 and A121 are then attached to the A105.

13-12 A110 Port 2 and A109 Port 1 Level Detector Modules

The figure below shows the A110 Port 1 Level Detector Module (at left) and the A109 Port 1 Level Detector Module (at right). Mechanically, the MS4642A / MS4644A modules are the same as the MS4645A / MS4647A modules.

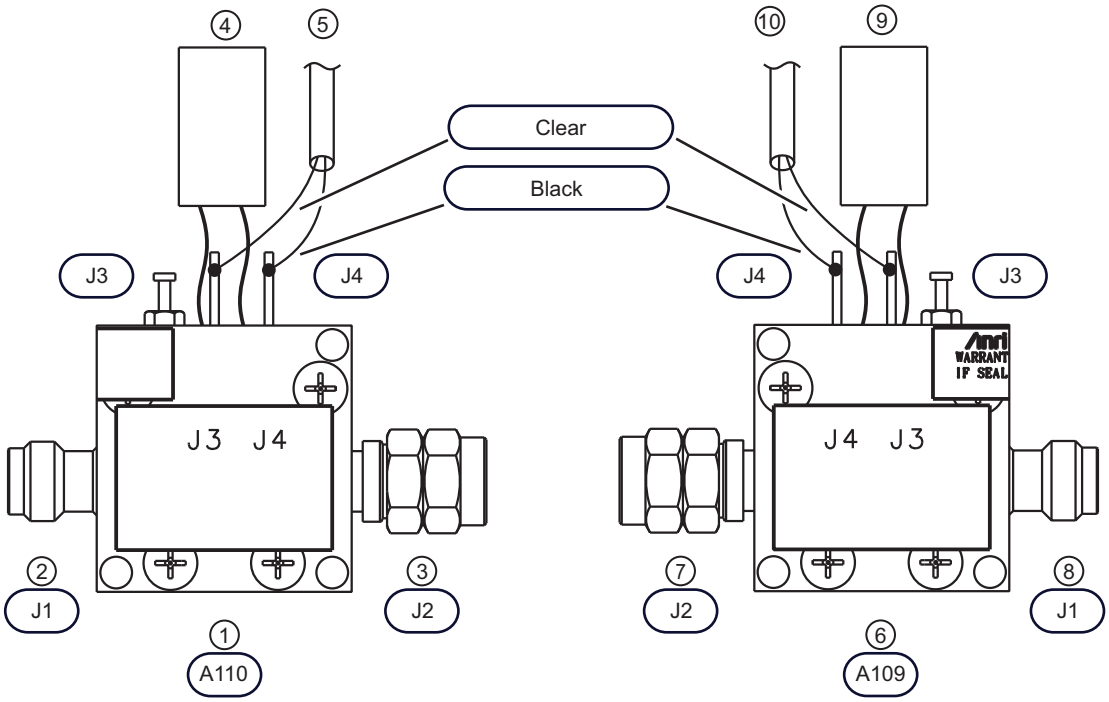

A110 Port 2 Level Detector

1. A110 Port 2 Level Detector
   - MS4642A / MS4644A (with Option 051, 061 and 062)
     – A110 Port 2 Level Detector, K Connector, 40 GHz - ND72125 - 67147-2
   - MS4645A / MS4647A (with Option 051, 061 and 062)
     – A110 Port 2 Level Detector, V Connector, 70 GHz - ND72127 - 67389-2
2. A110 port J1
3. A110 port J2
4. Twisted pair cable from level detector heater to A18 RF Control PCB Assembly connector J20.
5. Coaxial cable to A18 PCB connector J5

A109 Port 1 Level Detector

6 - A109 Port 1 Level Detector
   - MS4642A / MS4644A (with Option 051, 061 and 062)
     – A109 Port 1 Level Detector, K Connector, 40 GHz - ND72124 - 67147-1
   - MS4645A / MS4647A (with Option 051, 061 and 062)
     – A109 Port 1 Level Detector, V Connector, 70 GHz - ND72126 - 67389-1

6. A109 port J2
7. A109 port J1
8. Twisted pair cable from level detector heater to A18 PCB connector J21.
9. Coaxial cable to A18 PCB connector J6.

Figure 13-9. A110 Port 2 Level Detector and A109 Port 1 Level Detector Modules

On instruments with Standard No Options:

- On Test Port 2, the A110 module is attached to the A107 module. The A107 is then attached to the A108.
- On Test Port 1, the A109 module is attached to the A105 module. The A105 is then attached to the A108.

On instruments with Option 051:

- On Port 2 Source, the A110 is attached to the A107 module. The A107 is then attached to the A108.
- On Port 1 Source, the A109 is attached to the A105 module. The A105 is then attached to the A108.

On instruments with Option 061:

- On Port 2 Source, the A110 is attached to the A107 module. The A107 is then attached to the A108.
- On Port 1 Source, the A109 is attached to the A105. One side of the A105 goes to the A108. The other side goes to the A121.

On instruments with Option 062:

- On Port 2 Source, the A110 is attached to the A107. One side of the A107 goes to the A108. The other side goes to the A122.
- On Port 1 Source, the A109 is attached to the A105. One side of the A105 goes to the A108. The other side goes to the A121.

13-13 Test Port 1 Module Group Assembly

The figure below shows the basic port group assembly. The modules shown are common to all instrument models.

For VNAs with Standard No Options, attach an A105 to the A128, and an A109 to the A105.

- MS4642A / MS4644A: A105 Reference Coupler, 40 GHz – No ND – 66487
- MS4645A / MS4647A: A105 Reference Coupler, 70 GHz – No ND – 65270
- MS4642A / MS4644A: A109 Port 1 Level Detector, K Connector, 40 GHz – ND70095 – 67417-2
- MS4645A / MS4647A: A109 Port 1 Level Detector, V Connector, 70 GHz – ND70097 – 67389-2

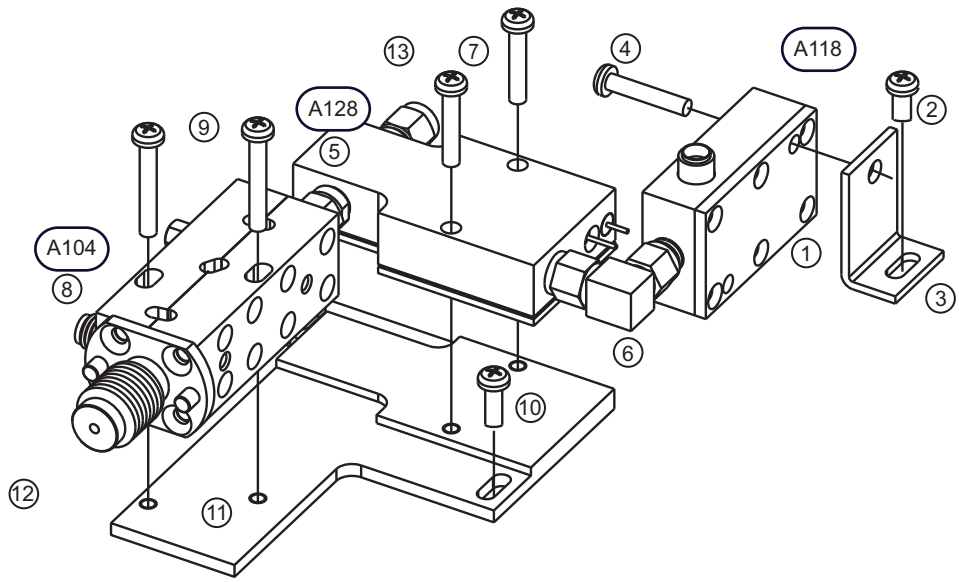

Figure 13-10. Test Port 1 Module Group - A118, A128, and A104 (1 of 2)

A118 – Low Band Bridge Module

1. A118 Low Band Bridge
   - MS4642A / MS4644A: A118 Low Band Bridge – ND70078 – 64016
   - MS4645A / MS4647A: A118 Low Band Bridge – ND70078 – 64016
2. Pan head Phillips M3 × 8 mm bracket-to-chassis screws.
3. A118 mounting bracket.
4. Pan head Phillips M3 × 18 mm A118 module-to-bracket screws.

A128 – Diplexer/Bias Tee Module

5. A128 Diplexer/Bias Tee Module
   - MS4642A / MS4644A: A128 Diplexer/Bias Tee Module, Port 1, 40 GHz – ND70088 – 66465 or ND73940 – 74277
   - MS4645A / MS4647A: A128 Diplexer/Bias Tee Module, Port 1, 70 GHz – ND70090 – 64911 or ND73942 – 74278
6. RF Elbow Connector (m-m) between A118 and A128.
7. Two (2) pan head Phillips M3 × 18 mm module-to-bracket screws.

A104 Test Port Coupler

8. A104 Test Port Coupler
   - MS4642A / MS4644A: A104 Test Coupler, 40 GHz – No ND – 66480
   - MS4645A / MS4647A: A104 Test Coupler, 70 GHz – No ND – 66245
9. Two (2) pan head Phillips M3 × 25 mm module-to-bracket screws.
10. Two (2) pan head Phillips M3 × 8 mm bracket-to-chassis screws.
11. A104 / A128 combo mounting bracket.
12. Front panel Thrust Washer, Test Port Nut, and Test Port Adapter removed. Not shown here.
    - See Figure 8-1, “Test Port Connectors and Related Hardware” on page 8-2 in Chapter 8, “External Component Procedures”.

Figure 13-10. Test Port 1 Module Group - A118, A128, and A104 (2 of 2)

13-14 Identifying Port Module Removal and Installation Procedures

Use the two tables below to identify your instrument model, the installed option, and then the port group and module. Next to each module are cross references to the removal and installation procedures.

MS4642A / MS46544A Port Group Modules and Procedures

For each MS4642A / MS4644A instrument option, the table below (Table 13-1) lists the port group, the modules that comprise it, and then cross references to the removal and installation procedures. In general, the modules are listed in sequence going from the A18 RF Control PCB Assembly towards the RF Deck Front Panel. 4

Table 13-1. MS4642A / MS4644A - Replacement Procedures - By Option, Port, and Module (1 of 5)

Model & Option	Port Group	ERN - Module Name - PN	Procedures
MS4642A **MS4644A**	Test Port 2 (TP2)	A108 High Band Transfer Switch, 40 GHz – ND70092 – 66221	• Section 13-21, “Standard No Options - Test Port 2 Modules - Removing” on page 13-62. • Section 13-22, “Standard No Options - Test Port 2 Modules - Installing” on page 13-68. • Section 8-2, “Replace Front Panel Test Ports” on page 8-2
		A107 Reference Coupler, 40 GHz – No ND – 66487	
		A110 – Port 2 Level Detector, 40 GHz, K Connector – ND70094 – 67417-1	
		A129 Diplexer/Bias Tee Module, Port 2, 40 GHz – ND73941 - 74277	
		A119 Low Band Bridge – ND70078 – 64016	
		A106 Test Coupler, 40 GHz – No ND – 66480	
		Test Port Adapter K Connector – No ND – 34YK50C	
Standard No Options	Test Port 1 (TP1)	A108 High Band Transfer Switch, 40 GHz – ND70092 – 66221	• Section 13-23, “Standard No Options - Test Port 1 Modules - Removing” on page 13-71. • Section 13-24, “Standard No Options - Test Port 1 Modules - Installing” on page 13-76. • Section 8-2, “Replace Front Panel Test Ports” on page 8-2
		A105 Reference Coupler, 40 GHz – No ND – 66487	
		A109 Port 1 Level Detector, 40 GHz, K Connector – ND70095 – 67417-2	
		A128 Diplexer/Bias Tee Module, Port 1, 40 GHz – ND73940 – 74277	
		A118 Low Band Bridge – ND70078 – 64016	
		A104 Test Coupler, 40 GHz – No ND – 66480	
		Test Port Adapter K Connector – No ND – 34YK50C	

Table 13-1. MS4642A / MS4644A - Replacement Procedures - By Option, Port, and Module (2 of 5)

Model & Option	Port Group	ERN - Module Name - PN	Procedures
MS4642A **MS4644A** **Option 051**	Test Port 2 (TP2)	A119 Low Band Bridge – ND70078 – 64016	• Section 13-25, “Option 051/061/062 - Test Port 2 Modules - Removing” on page 13-79. • Section 13-26, “Option 051/061/062 - Test Port 2 Modules - Installing” on page 13-83. • Section 8-2, “Replace Front Panel Test Ports” on page 8-2
		A129 Diplexer/Bias Tee Module, Port 2, 40 GHz – ND73941 - 74277	
		A106 Test Coupler, 40 GHz – No ND – 66480	
		Test Port Adapter K Connector – No ND – 34YK50C	
	Port 2 Source (P2 Src)	A108 High Band Transfer Switch, 40 GHz – ND70092 – 66221	• Section 13-31, “Option 051/061 - Port 2 Source Modules - Removing” on page 13-97. • Section 13-32, “Option 051/061 - Port 2 Source Modules - Preparing” on page 13-100 • Section 13-33, “Option 051/061 - Port 2 Source Modules - Installing” on page 13-101.
		A107 Reference Coupler, 40 GHz – No ND – 66487	
		A110 – Port 2 Level Detector, 40 GHz, K Connector – ND72125 – 67417-2	
	Port 1 Source (P1 Src)	A108 High Band Transfer Switch, 40 GHz – ND70092 – 66221	• Section 13-27, “Option 051 - Port 1 Source Modules - Removing” on page 13-85. • Section 13-28, “Option 051 - Port 1 Source Modules - Installing” on page 13-89.
		A105 Reference Coupler, 40 GHz – No ND – 66487	
		A109 Port 1 Level Detector, 40 GHz, K Connector – ND72124 – 67417-1	
	Test Port 1 (TP1)	A118 Low Band Bridge – ND70078 – 64016	• Section 13-29, “Option 051/061/062 - Test Port 1 Modules - Removing” on page 13-91. • Section 13-30, “Option 051/061/062 - Test Port 1 Modules - Installing” on page 13-95. • Section 8-2, “Replace Front Panel Test Ports” on page 8-2
		A128 Diplexer/Bias Tee Module, Port 1, 40 GHz – ND73940 – 74277	
		A104 Test Coupler, 40 GHz – No ND – 66480	
		Test Port Adapter K Connector – No ND – 34YK50C	

Table 13-1. MS4642A / MS4644A - Replacement Procedures - By Option, Port, and Module (3 of 5)

Model & Option	Port Group	ERN - Module Name - PN	Procedures
MS4642A **MS4644A** **Option 061**	Port 2 b2 (P2 b2)	A123 High Band Step Attenuator, Port 2 b2, 40 GHz – No ND – 68570	• Section 13-15, “Option 061/062 - Port 2 b2/Port 1 b1 Attenuators - Removing” on page 13-37. • Section 13-16, “Option 061/062 - Attenuators - Preparing” on page 13-47. • Section 13-17, “Option 061/062 - Port 2 b2/Port 1 b1 Attenuators - Installing” on page 13-51.
	Test Port 2 (TP2)	A119 Low Band Bridge – ND70078 – 64016	• Section 13-25, “Option 051/061/062 - Test Port 2 Modules - Removing” on page 13-79. • Section 13-26, “Option 051/061/062 - Test Port 2 Modules - Installing” on page 13-83. • Section 8-2, “Replace Front Panel Test Ports” on page 8-2
		A129 Diplexer/Bias Tee Module, Port 2, 40 GHz – ND73941 – 74277	
		A106 Test Coupler, 40 GHz – No ND – 66480	
		Test Port Adapter K Connector – No ND – 34YK50C	
	Port 2 Source (P2 Src)	A108 High Band Transfer Switch, 40 GHz – ND70092 – 66221	• Section 13-31, “Option 051/061 - Port 2 Source Modules - Removing” on page 13-97 • Section 13-32, “Option 051/061 - Port 2 Source Modules - Preparing” on page 13-100 • Section 13-33, “Option 051/061 - Port 2 Source Modules - Installing” on page 13-101.
		A107 Reference Coupler, 40 GHz – No ND – 66487	
		A110 – Port 2 Level Detector, 40 GHz, K Connector – ND72125 – 67417-2	
	Port 1 Source (P1 Src)	A108 High Band Transfer Switch, 40 GHz – ND70092 – 66221	• Section 13-34, “Option 061/062 - Port 1 Source Modules - Removing” on page 13-103. • Section 13-16, “Option 061/062 - Attenuators - Preparing” on page 13-47 • Section 13-35, “Option 061/062 - Port 1 Source Modules - Preparing” on page 13-106. • Section 13-36, “Option 061/062 - Port 1 Source Modules - Installing” on page 13-107.
		A105 Reference Coupler, 40 GHz – No ND – 66487	
		A109 Port 1 Level Detector, 40 GHz, K Connector – ND72124 – 67147-1	
		A121 High Band Step Attenuator, Port 1 Source, 40 GHz – No ND – 66052	
	Test Port 1 (TP1)	A118 Low Band Bridge – ND70078 – 64016	• Section 13-29, “Option 051/061/062 - Test Port 1 Modules - Removing” on page 13-91. • Section 13-30, “Option 051/061/062 - Test Port 1 Modules - Installing” on page 13-95. • Section 8-2, “Replace Front Panel Test Ports” on page 8-2
		A128 Diplexer/Bias Tee Module, Port 1, 40 GHz – ND73940 – 74277	
		A104 Test Coupler, 40 GHz – No ND – 66480	
		Test Port Adapter K Connector – No ND – 34YK50C	

Table 13-1. MS4642A / MS4644A - Replacement Procedures - By Option, Port, and Module (4 of 5)

Model & Option	Port Group	ERN - Module Name - PN	Procedures
MS4642A **MS4644A** **Option 062** *Continued Below*	Port 2 b2 (P2 b2)	A123 High Band Step Attenuator, Port 2 b2, 40 GHz – No ND – 68570	• Section 13-15, “Option 061/062 - Port 2 b2/Port 1 b1 Attenuators - Removing” on page 13-37. • Section 13-16, “Option 061/062 - Attenuators - Preparing” on page 13-47. • Section 13-17, “Option 061/062 - Port 2 b2/Port 1 b1 Attenuators - Installing” on page 13-51.
	Test Port 2 (TP2)	A119 Low Band Bridge – ND70078 – 64016 A129 Diplexer/Bias Tee Module, Port 2, 40 GHz – ND73941 – 74277 A106 Test Coupler, 40 GHz – No ND – 66480 Test Port Adapter K Connector – No ND – 34YK50C	• Section 13-25, “Option 051/061/062 - Test Port 2 Modules - Removing” on page 13-79. • Section 13-26, “Option 051/061/062 - Test Port 2 Modules - Installing” on page 13-83. • Section 8-2, “Replace Front Panel Test Ports” on page 8-2
	Port 2 Source (P2 Src)	A108 High Band Transfer Switch, 40 GHz – ND70092 – 66221 A107 Reference Coupler, 40 GHz – No ND – 66487 A110 – Port 2 Level Detector, 40 GHz, K Connector – ND72125 – 67417-2 A122 High Band Step Attenuator, Port 2 Source, 40 GHz – No ND – 66052	• Section 13-37, “Option 062 - Port 2 Source Modules - Removing” on page 13-109 • Section 13-16, “Option 061/062 - Attenuators - Preparing” on page 13-47 • Section 13-38, “Option 062 - Port 2 Source Modules - Preparing” on page 13-113 • Section 13-39, “Option 062 - Port 2 Source Modules - Installing” on page 13-114
	Port 1 Source (P1 Src)	A108 High Band Transfer Switch, 40 GHz – ND70092 – 66221 A105 Reference Coupler, 40 GHz – No ND – 66487 A109 Port 1 Level Detector, 40 GHz, K Connector – ND72124 – 67417-1 A121 High Band Step Attenuator, Port 1 Source, 40 GHz – No ND – 66052	• Section 13-34, “Option 061/062 - Port 1 Source Modules - Removing” on page 13-103 • Section 13-35, “Option 061/062 - Port 1 Source Modules - Preparing” on page 13-106 • Section 13-16, “Option 061/062 - Attenuators - Preparing” on page 13-47. • Section 13-35, “Option 061/062 - Port 1 Source Modules - Preparing” on page 13-106

Table 13-1. MS4642A / MS4644A - Replacement Procedures - By Option, Port, and Module (5 of 5)

Model & Option	Port Group	ERN - Module Name - PN	Procedures
Continued Above	Test Port 1 (TP1)	A118 Low Band Bridge – ND70078 – 64016	• Section 13-29, “Option 051/061/062 - Test Port 1 Modules - Removing” on page 13-91. • Section 13-30, “Option 051/061/062 - Test Port 1 Modules - Installing” on page 13-95. • Section 8-2, “Replace Front Panel Test Ports” on page 8-2
		A128 Diplexer/Bias Tee Module, Port 1, 40 GHz – ND73940 – 74277	
		A104 Test Coupler, 40 GHz – No ND – 66480	
		Test Port Adapter K Connector – No ND – 34YK50C	
MS4642A **MS4644A** **Option 062**	Port 1 b1 (P1 b1)	A120 High Band Step Attenuator, Test, Port 1 b1, 40 GHz – No ND – 68570	• Section 13-15, “Option 061/062 - Port 2 b2/Port 1 b1 Attenuators - Removing” on page 13-37. • Section 13-16, “Option 061/062 - Attenuators - Preparing” on page 13-47. • Section 13-17, “Option 061/062 - Port 2 b2/Port 1 b1 Attenuators - Installing” on page 13-51.

MS4645A / MS4647A Port Group Modules and Procedures

For each MS4645A / MS4647A instrument option, the table below (Table 13-2) lists the port group, the modules that comprise it, and then cross references to the removal and installation procedures. In general, the modules are listed in sequence going from the A18 RF Control PCB Assembly towards the RF Deck Front Panel.

Table 13-2. MS4645A / MS4647A - Replacement Procedures - By Option, Port, and Module (1 of 5)

Model & Option	Port Group	ERN - Module Name - PN	Procedures
MS4645A MS4647A	Test Port 2 (TP2)	A108 V Integrated High Band Transfer Switch, 70 GHz – ND70093 – 66619	• Section 13-21, “Standard No Options - Test Port 2 Modules - Removing” on page 13-62. • Section 13-22, “Standard No Options - Test Port 2 Modules - Installing” on page 13-68. • Section 8-2, “Replace Front Panel Test Ports” on page 8-2
		A107 Reference Coupler, 70 GHz – No ND – 65270	
		A110 – Port 2 Level Detector, V Connector, 70 GHz – ND70096 – 67389-1	
		A129 Diplexer/Bias Tee Module, Port 2, 70 GHz – ND73943 – 74278	
		A119 Low Band Bridge – ND70078 – 64016	
		A106 Test Coupler, 70 GHz – No ND – 66245	
		Test Port Adapter V Connector – No ND – 34YV50C	
Standard No Options	Test Port 1 (TP1)	A108 V Integrated High Band Transfer Switch, 70 GHz – ND70093 – 66619	• Section 13-23, “Standard No Options - Test Port 1 Modules - Removing” on page 13-71. • Section 13-24, “Standard No Options - Test Port 1 Modules - Installing” on page 13-76. • Section 8-2, “Replace Front Panel Test Ports” on page 8-2
		A105 Reference Coupler, 70 GHz – No ND – 65270	
		A109 Port 1 Level Detector, V Connector, 70 GHz – ND70097 – 67389-2	
		A128 Diplexer/Bias Tee Module, Port 1, 70 GHz – ND73942 - 74278	
		A118 Low Band Bridge – ND70078 – 64016	
		A104 Test Coupler, 70 GHz – No ND – 66245	
		Test Port Adapter V Connector – No ND – 34YV50C	

Table 13-2. MS4645A / MS4647A - Replacement Procedures - By Option, Port, and Module (2 of 5)

Model & Option	Port Group	ERN - Module Name - PN	Procedures
MS4645A **MS4647A** **Option 051**	Test Port 2 (TP2)	A119 Low Band Bridge – ND70078 – 64016	• Section 13-25, “Option 051/061/062 - Test Port 2 Modules - Removing” on page 13-79 • Section 13-26, “Option 051/061/062 - Test Port 2 Modules - Installing” on page 13-83 • Section 8-2, “Replace Front Panel Test Ports” on page 8-2
		A129 Diplexer/Bias Tee Module, Port 2, 70 GHz – ND73943 – 74278	
		A106 Test Coupler, 70 GHz – No ND – 66245	
		Test Port Adapter V Connector – No ND – 34YV50C	
	Port 2 Source (P2 Src)	A108 V Integrated High Band Transfer Switch, 70 GHz – ND70093 – 66619	• Section 13-31, “Option 051/061 - Port 2 Source Modules - Removing” on page 13-97. • Section 13-33, “Option 051/061 - Port 2 Source Modules - Installing” on page 13-101.
		A107 Reference Coupler, 70 GHz – No ND – 65270	
		A110 – Port 2 Level Detector, V Connector, 70 GHz – ND72127 – 67389-2	
	Port 1 Source (P1 Src)	A108 V Integrated High Band Transfer Switch, 70 GHz – ND70093 – 66619	• Section 13-27, “Option 051 - Port 1 Source Modules - Removing” on page 13-85. • Section 13-28, “Option 051 - Port 1 Source Modules - Installing” on page 13-89.
		A105 Reference Coupler, 70 GHz – No ND – 65270	
		A109 – A109 Port 1 Level Detector, V Connector, 70 GHz – ND72126 – 67389-1	
	Test Port 1 (TP1)	A118 Low Band Bridge – ND70078 – 64016	• Section 13-29, “Option 051/061/062 - Test Port 1 Modules - Removing” on page 13-91. • Section 13-30, “Option 051/061/062 - Test Port 1 Modules - Installing” on page 13-95. • Section 8-2, “Replace Front Panel Test Ports” on page 8-2
		A128 Diplexer/Bias Tee Module, Port 1, 70 GHz – ND73942 - 74278	
		A104 Test Coupler, 70 GHz – No ND – 66245	
		Test Port Adapter V Connector – No ND – 34YV50C	

Table 13-2. MS4645A / MS4647A - Replacement Procedures - By Option, Port, and Module (3 of 5)

Model & Option	Port Group	ERN - Module Name - PN	Procedures
MS4645A **MS4647A** **Option 061**	Port 2 b2 (P2 b2)	A123 High Band Step Attenuator, Port 2 b2, 70 GHz – No ND – 68570	• Section 13-15, “Option 061/062 - Port 2 b2/Port 1 b1 Attenuators - Removing” on page 13-37. • Section 13-16, “Option 061/062 - Attenuators - Preparing” on page 13-47. • Section 13-17, “Option 061/062 - Port 2 b2/Port 1 b1 Attenuators - Installing” on page 13-51.
	Test Port 2 (TP2)	A119 Low Band Bridge – ND70078 – 64016	• Section 13-25, “Option 051/061/062 - Test Port 2 Modules - Removing” on page 13-79. • Section 13-26, “Option 051/061/062 - Test Port 2 Modules - Installing” on page 13-83. • Section 8-2, “Replace Front Panel Test Ports” on page 8-2
		A129 Diplexer/Bias Tee Module, Port 2, 70 GHz – ND73943 - 74278	
		A106 Test Coupler, 70 GHz – No ND – 66245	
		Test Port Adapter V Connector – No ND – 34YV50C	
	Port 2 Source (P2 Src)	A108 V Integrated High Band Transfer Switch, 70 GHz – ND70093 – 66619	• Section 13-31, “Option 051/061 - Port 2 Source Modules - Removing” on page 13-97. • Section 13-33, “Option 051/061 - Port 2 Source Modules - Installing” on page 13-101.
		A107 Reference Coupler, 70 GHz – No ND – 65270	
		A110 – Port 2 Level Detector, V Connector, 70 GHz – ND72127 – 67389-2	
	Port 1 Source (P1 Src)	A108 V Integrated High Band Transfer Switch, 70 GHz – ND70093 – 66619	• Section 13-34, “Option 061/062 - Port 1 Source Modules - Removing” on page 13-103. • Section 13-16, “Option 061/062 - Attenuators - Preparing” on page 13-47 • Section 13-35, “Option 061/062 - Port 1 Source Modules - Preparing” on page 13-106. • Section 13-36, “Option 061/062 - Port 1 Source Modules - Installing” on page 13-107.
		A105 Reference Coupler, 70 GHz – No ND – 65270	
		A109 Port 1 Level Detector, V Connector, 70 GHz – ND72126 – 67389-1	
		A121 High Band Step Attenuator, Port 1 Source, 70 GHz – No ND – 66050	
	Test Port 1 (TP1)	A118 Low Band Bridge – ND70078 – 64016	• Section 13-29, “Option 051/061/062 - Test Port 1 Modules - Removing” on page 13-91. • Section 13-30, “Option 051/061/062 - Test Port 1 Modules - Installing” on page 13-95. • Section 8-2, “Replace Front Panel Test Ports” on page 8-2
		A128 Diplexer/Bias Tee Module, Port 1, 70 GHz – ND73942 – 74278	
		A104 Test Coupler, 70 GHz – No ND – 66245	
		Test Port Adapter V Connector – No ND – 34YV50C	

Table 13-2. MS4645A / MS4647A - Replacement Procedures - By Option, Port, and Module (4 of 5)

Model & Option	Port Group	ERN - Module Name - PN	Procedures
MS4645A **MS4647A** **Option 062** *Continued Below*	Port 2 b2 (P2 b2)	A123 High Band Step Attenuator, Port 2 b2, 70 GHz – No ND – 68570	• Section 13-15, “Option 061/062 - Port 2 b2/Port 1 b1 Attenuators - Removing” on page 13-37. • Section 13-16, “Option 061/062 - Attenuators - Preparing” on page 13-47. • Section 13-17, “Option 061/062 - Port 2 b2/Port 1 b1 Attenuators - Installing” on page 13-51.
	Test Port 2 (TP2)	A119 Low Band Bridge – ND70078 – 64016	• Section 13-25, “Option 051/061/062 - Test Port 2 Modules - Removing” on page 13-79 • Section 13-26, “Option 051/061/062 - Test Port 2 Modules - Installing” on page 13-83 • Section 8-2, “Replace Front Panel Test Ports” on page 8-2
		A129 Diplexer/Bias Tee Module, Port 2, 70 GHz – ND73943 - 74278	
		A106 Test Coupler, 70 GHz – No ND – 66245	
		Test Port Adapter V Connector – No ND – 34YV50C	
	Port 2 Source	A108 V Integrated High Band Transfer Switch, 70 GHz – ND70093 – 66619	• Section 13-37, “Option 062 - Port 2 Source Modules - Removing” on page 13-109 • Section 13-16, “Option 061/062 - Attenuators - Preparing” on page 13-47 • Section 13-38, “Option 062 - Port 2 Source Modules - Preparing” on page 13-113 • Section 13-39, “Option 062 - Port 2 Source Modules - Installing” on page 13-114
		A107 Reference Coupler, 70 GHz – No ND – 65270	
		A110 Port 2 Level Detector, V Connector, 70 GHz – ND72127 – 67389-2	
		A122 High Band Step Attenuator, Port 1 Source, 70 GHz – No ND – 66050	
	Port 1 Source	A108 V Integrated High Band Transfer Switch, 70 GHz – ND70093 – 66619	• Section 13-34, “Option 061/062 - Port 1 Source Modules - Removing” on page 13-103 • Section 13-16, “Option 061/062 - Attenuators - Preparing” on page 13-47. • Section 13-35, “Option 061/062 - Port 1 Source Modules - Preparing” on page 13-106 • Section 13-36, “Option 061/062 - Port 1 Source Modules - Installing” on page 13-107
		A105 Reference Coupler, 70 GHz – No ND – 65270	
		A109 Port 1 Level Detector, V Connector, 70 GHz – ND72126 – 67389-1	
		A121 High Band Step Attenuator, Port 1 Source, 70 GHz – No ND – 66050	

Table 13-2. MS4645A / MS4647A - Replacement Procedures - By Option, Port, and Module (5 of 5)

Model & Option	Port Group	ERN - Module Name - PN	Procedures
Continued Above **MS4645A** **MS4647A** **Option 062**	Test Port 1 (TP1)	A118 Low Band Bridge – ND70078 – 64016	• Section 13-29, “Option 051/061/062 - Test Port 1 Modules - Removing” on page 13-91. • Section 13-30, “Option 051/061/062 - Test Port 1 Modules - Installing” on page 13-95. • Section 8-2, “Replace Front Panel Test Ports” on page 8-2
		A128 Diplexer/Bias Tee Module, Port 1, 70 GHz – ND73942 – 74278	
		A104 Test Coupler, 70 GHz – No ND – 66245	
		Test Port Adapter V Connector – No ND – 34YV50C	
	Port 1 b1 (P1 b1)	A120 High Band Step Attenuator, Test, Port 1 b1, 70 GHz – No ND – 66050	• Section 13-15, “Option 061/062 - Port 2 b2/Port 1 b1 Attenuators - Removing” on page 13-37. • Section 13-16, “Option 061/062 - Attenuators - Preparing” on page 13-47. • Section 13-17, “Option 061/062 - Port 2 b2/Port 1 b1 Attenuators - Installing” on page 13-51.

13-15 Option 061/062 - Port 2 b2/Port 1 b1 Attenuators - Removing

Use

Use this procedure to remove and replace an attenuator module from a single component port group.

In all cases, the High Band Step Attenuators are attached to Port 2 b2 (A123) or Port 1 b1 (A121) and are only encountered in instruments equipped with Option 061 or Option 062:

- MS4642A / MS4644A: A123 High Band Step Attenuator, Test, Port 2 b2, 40 GHz – No ND – 68570
- MS4645A / MS4647A: A123 High Band Step Attenuator, Test, Port 2 b2, 70 GHz – No ND – 66050
- MS4642A / MS4644A: A121 High Band Step Attenuator, Source, Port 1 Source, 40 GHz – No ND – 66052
- MS4645A / MS4647A: A121 High Band Step Attenuator, Source, Port 1 Source, 70 GHz – No ND – 66050

In general, the only reason to remove an attenuator module is to replace it.

Identification - Option 061 - Port 2 b2 A123 & Port 1 Source A121 Attenuators

The figure below (Figure 13-11) shows the location of the Port 2 b2 (A123) and Port 1 Source (A121) Attenuators which are equipped on instruments with Option 061. Only the Port 2 b2 (A123) attenuator can be serviced using the procedure below.

To service the Port 1 Source module group, the A108 Highband Transfer Switch/V Integrated High Band Transfer Switch (A108 HBTS/VITS) must be removed, and then the rest of the port module group must be disassembled. See the following port group servicing procedures:

- Section 13-31, “Option 051/061 - Port 2 Source Modules - Removing” on page 13-97
- Section 13-33, “Option 051/061 - Port 2 Source Modules - Installing” on page 13-101

Note the Port 2 b2 (A123) Attenuator is equipped on instruments with Option 061 or 062. The Port 1 b1 (A120) Attenuator is only equipped on instruments with Option 062.

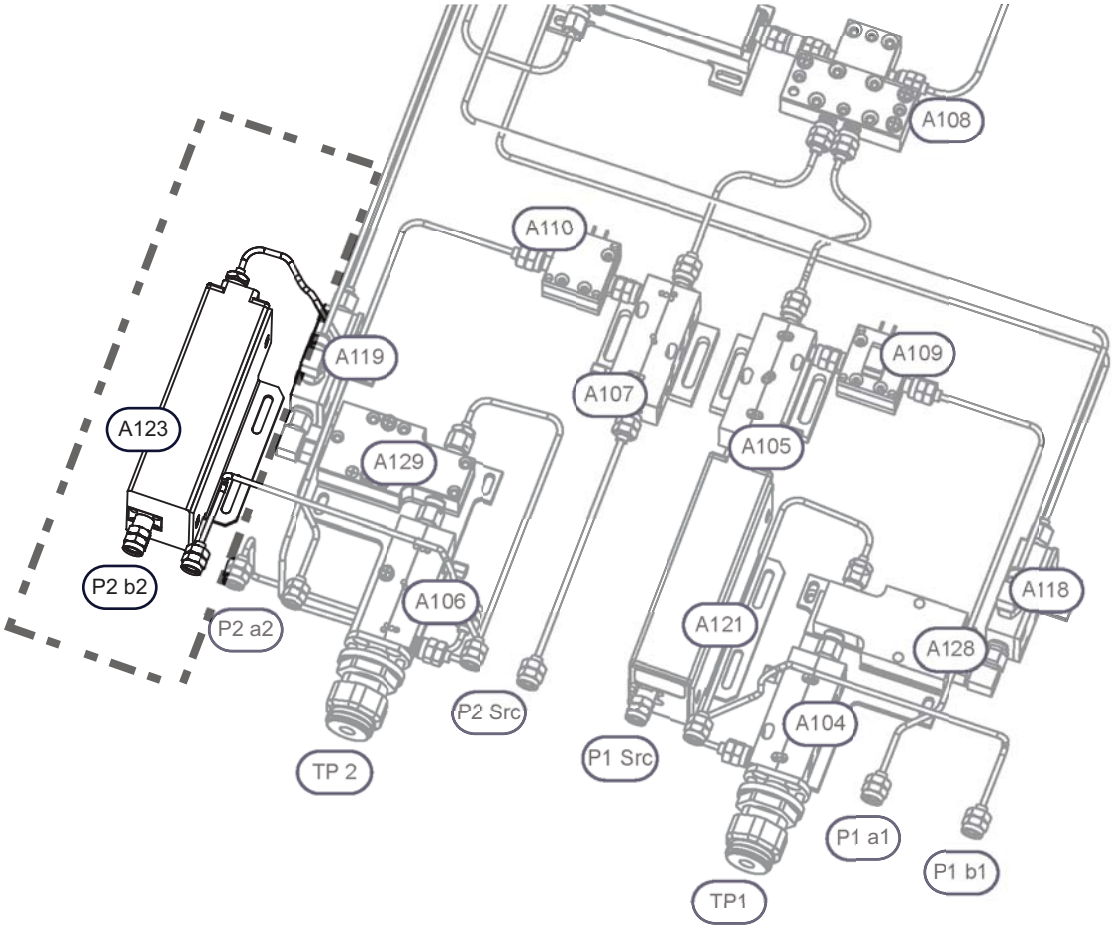

Figure 13-11. Option 061 - A123 Port 2 b2 and A121 Port 1 Source Attenuators (1 of 2)

Option 061 – Front Panel Loops and Two Attenuators

- The module configuration for Option 061.
- The A108, A112, and A114 configuration shown here is for an MS4645A / MS4647A.
- The configuration is different for a MS4642 or a MS4644A.
- In Chapter 12, see Section 12-2, “A18 Module Location and Configuration” on page 12-2 above.

A123 Port 2 Test Receiver b2 Attenuator

The left side A123 Port 2 b2 Attenuator is removable as a single module.

- MS4642A / MS4644A: A123 High Band Step Attenuator, Port 2 b2, 40 GHz – No ND – 68570
- MS4645A / MS4647A: A123 High Band Step Attenuator, Port 2 b2, 70 GHz – No ND – 66050

Removing the A123 Port 2 Test Receiver b2 Attenuator

The basic removal procedure is to disconnect the semi-rigid and other coaxial cables, remove the attenuator RF connection to the front panel, remove the bracket-to-chassis hardware, and remove the attenuator/bracket assembly and related hardware. Once removed, the brackets must be installed on the replacement attenuator.

A121 Port 1 Source Attenuator

The right center A121 Port 1 Source Attenuator is part of the Port 1 Source module group.

- MS4642A / MS4644A: A121 High Band Step Attenuator, Port 1 Source, 40 GHz – No ND – 66052
- MS4645A / MS4647A: A121 High Band Step Attenuator, Port 1 Source, 70 GHz – No ND – 66050

Removing the A121 Port 1 Source Attenuator

To access this attenuator, the port module group must be disassembled. The basic removal procedure is to remove the A108 HBTS/VITS, disconnect the A109, remove the A105, and remove the A121 as described above.

Figure 13-11. Option 061 - A123 Port 2 b2 and A121 Port 1 Source Attenuators (2 of 2)

Identification - Option 062 A123, A122, A121, and A120 Attenuators

The figure below (Figure 13-12) shows the location of the Port 2 b2 (A123), Port 2 Source (A122), Port 1 Source (A121), and Port 1 b1 (A120) Attenuators that are equipped on instruments with Option 062.

Only the Port 2 b2 (A123) and Port 1 b1 (A120) Attenuators can be serviced using the procedure below.

To service the Port 2 Source or Port 1 Source module group, the A108 HBTS/VITS must be removed, and then the rest of the port module group must be disassembled. See the following port group servicing procedures:

- Section 13-37, “Option 062 - Port 2 Source Modules - Removing” on page 13-109
- Section 13-38, “Option 062 - Port 2 Source Modules - Preparing” on page 13-113
- Section 13-39, “Option 062 - Port 2 Source Modules - Installing” on page 13-114

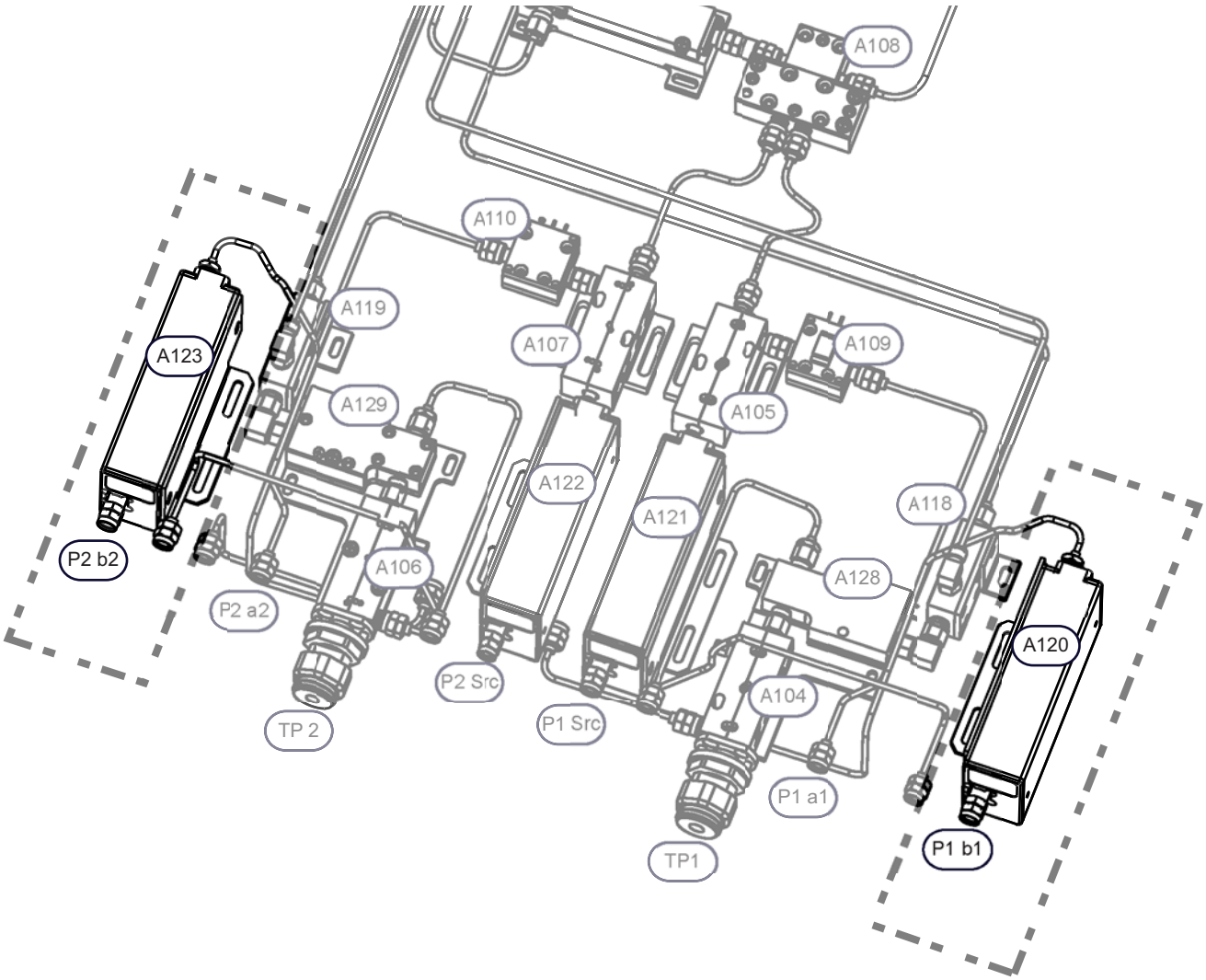

Figure 13-12. Option 062 - A123, A122, A121, and A120 Attenuators (1 of 2)

Option 062 – Front Panel Loops and Four Attenuators

- – The module configuration for Option 062.
- The A108, A112, and A114 configuration shown here is for an MS4645A / MS4647A.
- The configuration is different for a MS4642A or a MS4644A.
- In Chapter 12, see Section 12-2, “A18 Module Location and Configuration” on page 12-2 above.

A123 Port 2 Test Receiver b2 Attenuator

The left side A123 Port 2 b2 Attenuator is removable as a single module.

- MS4642A / MS4644A: A123 High Band Step Attenuator, Test, Port 2 b2, 40 GHz – No ND – 68570
- MS4645A / MS4647A: A123 High Band Step Attenuator, Test, Port 2 b2, 70 GHz – No ND – 66050

A120 Port 1 Test Receiver b1 Attenuator

The right side A120 Port 2 b2 Attenuator is removable as a single module.

- MS4642A / MS4644A: A120 High Band Step Attenuator, Test, Port 1 b1, 40 GHz – No ND – 68570
- MS4645A / MS4647A: A120 High Band Step Attenuator, Test, Port 1 b1, 70 GHz – No ND – 66050

Removing the A123 Port 2 b2 or A120 Port 1 b1 Test Receiver Attenuators

The basic removal procedure is to disconnect the semi-rigid and other coaxial cables, remove the attenuator RF connection to the front panel, remove the bracket-to-chassis hardware, and remove the attenuator/bracket assembly and related hardware. Once removed, the brackets must be installed on the replacement attenuator.

- See Section 13-15, “Option 061/062 - Port 2 b2/Port 1 b1 Attenuators - Removing” on page 13-37 above.
- See Section 13-16, “Option 061/062 - Attenuators - Preparing” on page 13-47 above.
- See Section 13-17, “Option 061/062 - Port 2 b2/Port 1 b1 Attenuators - Installing” on page 13-51 above.

A122 Port 2 Source Attenuator

The left center A122 Port 2 Source Attenuator is part of the Port 2 Source module group.

- MS4642A / MS4644A: A122 High Band Step Attenuator, Port 2 Source, 40 GHz – No ND – 66052
- MS4645A / MS4647A: A122 High Band Step Attenuator, Port 2 Source, 70 GHz – No ND – 66050

A121 Port 1 Source Attenuator

The right center A121 Port 1 Source Attenuator is part of the Port 1 Source module group.

- MS4642A / MS4644A: A121 High Band Step Attenuator, Port 1 Source, 40 GHz – No ND – 66052
- MS4645A / MS4647A: A121 High Band Step Attenuator, Port 1 Source, 70 GHz – No ND – 66050

Removing the A122 Port 2 Source or A121 Port 1 Source Attenuator

To access this attenuator, the port module group must be disassembled. The basic removal procedure is to remove the A108 HBTS/VITS, disconnect the A109, remove the A105, and remove the A121 as described above. In Chapter 12:

- See Section 12-9, “Remove A108 HBTS/VITS Module – ND70092 or ND70093” on page 12-16 above.
- See Section 12-11, “Install A108 HBTS/VITS – ND70092 or ND70093” on page 12-20 above.

Figure 13-12. Option 062 - A123, A122, A121, and A120 Attenuators (2 of 2)

Parts and Applicability

The attenuators are only equipped in instruments equipped with Option 061 or Option 062. The port they are installed on depends on the instrument option. The attenuator mounting brackets are installed either on the left side or the right side of the attenuator as shown Figure 13-13, "High Band Step Attenuator - Bracket Orientation and Assembly" on page 13-48 below. The attenuator signal/power cables connect to different connectors on the A18 RF Control PCB Assembly.

Table 13-3. High Band Attenuator Reference and Procedure Cross References (1 of 4)

Model Option	Port	ERN - Name - PN	Bracket Side	A18 PCB Connector	Procedures
MS4642A **MS4644A** **Option 061**	Port 2 b2	A123 High Band Step Attenuator, Test, Port 2 b2, 40 GHz – No ND – 68570	Right Side	A18 J4	To service, use procedures in this chapter: • Section 13-15, "Option 061/062 - Port 2 b2/Port 1 b1 Attenuators - Removing" on page 13-37. • Section 13-16, "Option 061/062 - Attenuators - Preparing" on page 13-47. • Section 13-17, "Option 061/062 - Port 2 b2/Port 1 b1 Attenuators - Installing" on page 13-51.
	Port 1 Source	A121 High Band Step Attenuator, Source, Port 1 Source, 40 GHz – No ND – 66052	Right Side	A18 J1	This attenuator is part of a multi-module port group and cannot use the removal/installation procedures in this chapter. To service, use these procedures: • Section 13-34, "Option 061/062 - Port 1 Source Modules - Removing" on page 13-103. • Section 13-16, "Option 061/062 - Attenuators - Preparing" on page 13-47. • Section 13-35, "Option 061/062 - Port 1 Source Modules - Preparing" on page 13-106. • Section 13-36, "Option 061/062 - Port 1 Source Modules - Installing" on page 13-107

Table 13-3. High Band Attenuator Reference and Procedure Cross References (2 of 4)

Model Option	Port	ERN - Name - PN	Bracket Side	A18 PCB Connector	Procedures
MS4642A **MS4644A** **Option 062**	Port 2 b2	A123 High Band Step Attenuator, Test, Port 2 b2, 40 GHz – No ND – 68570	Right Side	J18 J4	To service, use procedures in this chapter: • Section 13-15, “Option 061/062 - Port 2 b2/Port 1 b1 Attenuators - Removing” on page 13-37. • Section 13-16, “Option 061/062 - Attenuators - Preparing” on page 13-47. • Section 13-17, “Option 061/062 - Port 2 b2/Port 1 b1 Attenuators - Installing” on page 13-51.
	Port 2 Source	A122 High Band Step Attenuator, Source, Port 2 Source, 40 GHz – No ND – 66052	Left Side	A18 J3	These attenuators are each part of a multi-module port group and cannot use the removal/installation procedures in this chapter. To service, use these procedures: • Section 13-34, “Option 061/062 - Port 1 Source Modules - Removing” on page 13-103. • Section 13-16, “Option 061/062 - Attenuators - Preparing” on page 13-47. • Section 13-35, “Option 061/062 - Port 1 Source Modules - Preparing” on page 13-106. • Section 13-36, “Option 061/062 - Port 1 Source Modules - Installing” on page 13-107.
	Port 1 Source	A121 High Band Step Attenuator, Source, Port 1 Source, 40 GHz – No ND – 66050	Right Side	A18 J1	
	Port 1 b1	A120 High Band Step Attenuator, Test, Port 1 b1, 40 GHz – No ND – 68570	Left Side	A18 J2	To service, use procedures in this chapter: • Section 13-15, “Option 061/062 - Port 2 b2/Port 1 b1 Attenuators - Removing” on page 13-37. • Section 13-16, “Option 061/062 - Attenuators - Preparing” on page 13-47. • Section 13-17, “Option 061/062 - Port 2 b2/Port 1 b1 Attenuators - Installing” on page 13-51.

Table 13-3. High Band Attenuator Reference and Procedure Cross References (3 of 4)

Model Option	Port	ERN - Name - PN	Bracket Side	A18 PCB Connector	Procedures
MS4645A **MS4647A** **Option 061**	Port 2 b2	A123 High Band Step Attenuator, 70 GHz – No ND – 66050	Right Side	A18 J4	To service, use procedures in this chapter: • Section 13-15, “Option 061/062 - Port 2 b2/Port 1 b1 Attenuators - Removing” on page 13-37. • Section 13-16, “Option 061/062 - Attenuators - Preparing” on page 13-47. • Section 13-17, “Option 061/062 - Port 2 b2/Port 1 b1 Attenuators - Installing” on page 13-51.
	Port 1 Source	A122 High Band Step Attenuator, 70 GHz – No ND – 66050	Right Side	A18 J3	This attenuator is part of a multi-module port group and cannot use the removal/installation procedures in this chapter. To service, use these procedures: • Section 13-34, “Option 061/062 - Port 1 Source Modules - Removing” on page 13-103. • Section 13-16, “Option 061/062 - Attenuators - Preparing” on page 13-47. • Section 13-35, “Option 061/062 - Port 1 Source Modules - Preparing” on page 13-106. • Section 13-36, “Option 061/062 - Port 1 Source Modules - Installing” on page 13-107.

Table 13-3. High Band Attenuator Reference and Procedure Cross References (4 of 4)

Model Option	Port	ERN - Name - PN	Bracket Side	A18 PCB Connector	Procedures
MS4645A **MS4647A** **Option 062**	Port 2 b2	A123 High Band Step Attenuator, Test, 70 GHz – No ND – 66050	Right Side	A18 J4	To service, use procedures in this chapter: • Section 13-15, “Option 061/062 - Port 2 b2/Port 1 b1 Attenuators - Removing” on page 13-37. • Section 13-16, “Option 061/062 - Attenuators - Preparing” on page 13-47. • Section 13-17, “Option 061/062 - Port 2 b2/Port 1 b1 Attenuators - Installing” on page 13-51.
	Port 2 Source	A122 High Band Step Attenuator, Source, 70 GHz – No ND – 66050	Left Side	A18 J3	These attenuators are each part of a multi-module port group and cannot use the removal/installation procedures in this chapter. To service, use these procedures: • Section 13-34, “Option 061/062 - Port 1 Source Modules - Removing” on page 13-103. • Section 13-16, “Option 061/062 - Attenuators - Preparing” on page 13-47. • Section 13-35, “Option 061/062 - Port 1 Source Modules - Preparing” on page 13-106. • Section 13-36, “Option 061/062 - Port 1 Source Modules - Installing” on page 13-107.
	Port 1 Source	A121 High Band Step Attenuator, Source, 70 GHz – No ND – 66050	Right Side	A18 J1	
	Port 1 b1	A120 High Band Step Attenuator, Test, 70 GHz – No ND – 66050	Left Side	A18 J2	To service, use procedures in this chapter: • Section 13-15, “Option 061/062 - Port 2 b2/Port 1 b1 Attenuators - Removing” on page 13-37. • Section 13-16, “Option 061/062 - Attenuators - Preparing” on page 13-47. • Section 13-17, “Option 061/062 - Port 2 b2/Port 1 b1 Attenuators - Installing” on page 13-51.

The removal, preparation, and installation procedures are the same for both the 40 GHz and 70 GHz instruments.

Procedure

Common Procedures

1. Prepare work area, work surface, and observe safety issues.
   - See Section 7-4 “Common - Prepare Work Area and Safety” on page 7-9.

2. Remove Outer Cover.
   - See Section 7-5 “Common - Remove Outer Cover” on page 7-10.
3. Remove Inner Top Cover.
   - See Section 7-6 “Common - Remove Inner Cover” on page 7-13.
4. The Front Panel can stay in place.
   - To remove it, see:
     - Section 10-3 “Remove the Phase 1 Front Panel Assembly” on page 10-3
     - Section 10-4 “Remove the Phase 2 Front Panel Assembly” on page 10-11
5. Position the instrument so that it is upside down, with the RF Deck up.

Locate the Port Group

6. Locate the Port 2 b2 (A123) or Port 1 b1 (A120) Attenuator in either Figure 13-11 or Figure 13-12 below.
   - Use Figure 13-11, “Option 061 - A123 Port 2 b2 and A121 Port 1 Source Attenuators” on page 13-38 if your instrument is equipped with Option 061 Front Panel Loops and Two Attenuators.
   - Use Figure 13-12, “Option 062 - A123, A122, A121, and A120 Attenuators” on page 13-40 if your instrument is equipped with Option 062 Front Panel Loops and Four Attenuators.

Remove Cables

7. Disconnect the semi-rigid coaxial cables from the attenuator module and bend them slightly out of the way.
8. Remove the attached signal/power ribbon cable from the attenuator connector. Leave the cable attached to the A18 RF Control PCB Assembly.
9. Remove the two M3 × 0.5 mm kep nuts holding the attenuator bracket to the RF Deck chassis.
10. Using an 8 lbf · in torque end wrench, loosen the RF connection between the attenuator and the front panel connector.

Remove the Attenuator and Bracket

11. Remove the RF connector between the RF Deck Front Panel and the Attenuator.
12. Lift the attenuator/bracket assembly out of the chassis.
13. Note the orientation of the bracket to the Attenuator J1 and J2 ports.

13-16 Option 061/062 - Attenuators - Preparing

Use this procedure to prepare any RF Deck Bottom Side attenuator for installation. The attenuators are equipped on the following ports with the following options:

- Instruments equipped with Option 061:
  - MS4642A / MS4644A: A123 High Band Step Attenuator, Test, Port 2 b2, 40 GHz – No ND – 68570
  - MS4645A / MS4647A: A123 High Band Step Attenuator, Test, Port 2 b2, 70 GHz – No ND – 66050
  - MS4642A / MS4644A: A121 High Band Step Attenuator, Port 1 Source, 40 GHz – No ND – 66052
  - MS4645A / MS4647A: A121 High Band Step Attenuator, Port 1 Source, 70 GHz – No ND – 66050
- Instruments equipped with Option 062:
  - MS4642A / MS4644A: A123 High Band Step Attenuator, Test, Port 2 b2, 40 GHz – No ND – 68570
  - MS4645A / MS4647A: A123 High Band Step Attenuator, Test, Port 2 b2, 70 GHz – No ND – 66050
  - MS4642A / MS4644A: A122 High Band Step Attenuator, Port 2 Source, 40 GHz – No ND – 66052
  - MS4645A / MS4647A: A122 High Band Step Attenuator, Port 2 Source, 70 GHz – No ND – 66050
  - MS4642A / MS4644A: A121 High Band Step Attenuator, Port 1 Source, 40 GHz – No ND – 66052
  - MS4645A / MS4647A: A121 High Band Step Attenuator, Port 1 Source, 70 GHz – No ND – 66050
  - MS4642A / MS4644A: A120 High Band Step Attenuator, Test, Port 1 b1, 40 GHz – No ND – 68570
  - MS4645A / MS4647A: A120 High Band Step Attenuator, Test, Port 1 b1, 70 GHz – No ND – 66050

This procedure should be used after the to-be-replaced attenuator, bracket assembly, and related hardware has been removed using one of the following procedures:

- Section 13-15, “Option 061/062 - Port 2 b2/Port 1 b1 Attenuators - Removing” on page 13-37
- Section 13-34, “Option 061/062 - Port 1 Source Modules - Removing” on page 13-103
- Section 13-38, “Option 062 - Port 2 Source Modules - Preparing” on page 13-113

The preparation procedure consists of removing the attenuator mounting bracket and related hardware from the to-be-replaced attenuator and installing them on the new attenuator.

Note that the left or right bracket orientation depends on the installed port. The orientation of the bracket and the related hardware is shown in Figure 13-13 below and is summarized in Table 13-3, “High Band Attenuator Reference and Procedure Cross References” on page 13-42 above.

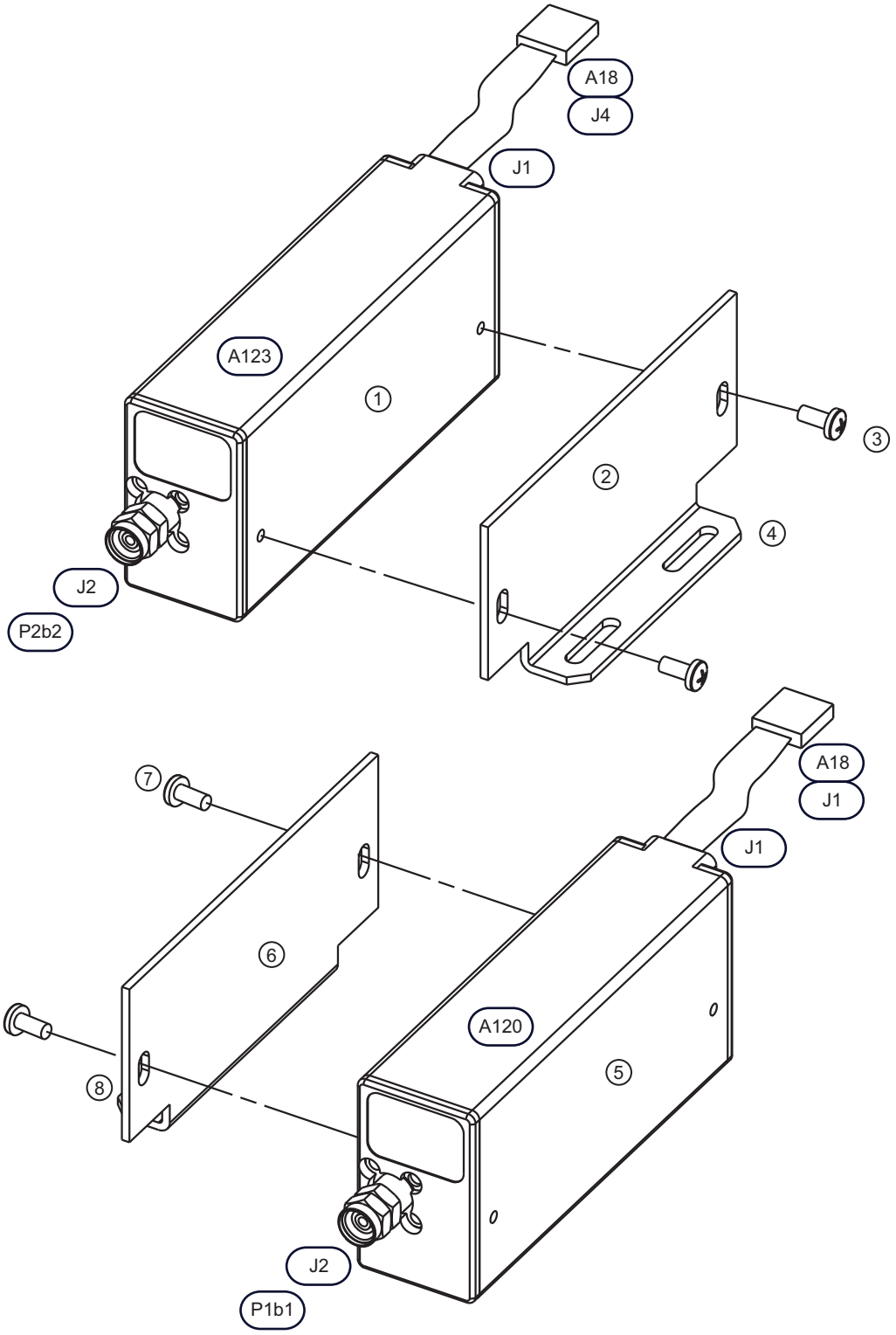

Figure 13-13. High Band Step Attenuator - Bracket Orientation and Assembly (1 of 2)

Top

1. A123 – High Band Step Attenuator:
   - The Attenuator connector J2 connects to the front panel left side Port 2 b2.
   - The Attenuator ribbon cable connects to the A18 PCB J4.
   - The Attenuator part number varies with the VNA model.
2. Mounting Bracket on RIGHT side of Attenuator.
3. Two (2) pan head Phillips 4×40 × 0.187” mounting screws.
4. Two M3 × 0.5 mm kep nuts (not shown) holding the bracket to threaded studs on the RF Deck chassis.

Bottom

5. 5 – A120 – High Band Step Attenuator:
   - The Attenuator connector J2 connects to the front panel right side Port 1 b2.
   - The Attenuator ribbon cable connects to the A18 PCB J1.
   - The Attenuator part number varies with the VNA model.
6. Mounting Bracket on LEFT side of Attenuator.
7. Two (2) pan head Phillips 4×40 × 0.187” mounting screws.
8. Two M3 × 0.5 mm kep nuts (not shown) holding the bracket to threaded studs on the RF Deck chassis.

Figure 13-13. High Band Step Attenuator - Bracket Orientation and Assembly (2 of 2)

Procedure

1. It is assumed that the A120, A121, A122, or A123 High Band Step Attenuator and Bracket Assembly has been removed from the RF Deck Bottom Side chassis.

- MS4642A / MS4644A:
  - A120 High Band Step Attenuator, Test, Port 1 b1, 40 GHz – No ND – 68570
  - A121 High Band Step Attenuator, Port 1 Source, 40 GHz – No ND – 66052
  - A122 High Band Step Attenuator, Port 2 Source, 40 GHz – No ND – 66052
  - A123 High Band Step Attenuator, Test, Port 2 b2, 40 GHz – No ND – 68570
- MS4645A / MS4647A:
  - A120 High Band Step Attenuator, Test, Port 1 b1, 70 GHz – No ND – 66050
  - A121 High Band Step Attenuator, Port 1 Source, 70 GHz – No ND – 66050
  - A122 High Band Step Attenuator, Port 2 Source, 70 GHz – No ND – 66050
  - A123 High Band Step Attenuator, Test, Port 2 b2, 70 GHz – No ND – 66050

2. If the ribbon cable is still attached on the to-be-replaced attenuator, transfer the cable to the new replacement attenuator.

Bracket Orientation

3. Observe the bracket-to-attenuator orientation on the to-be-replaced attenuator when viewed from the front attenuator J2 connector:

- For the A123 Port 2 b2 attenuator, the bracket is on the right.
- For the A122 Port 2 Source attenuator, the bracket is on the left
- For the A121 Port 1 Source attenuator, the bracket is on the right.
- For the A120 Port 1 b1 attenuator, the bracket is on the left.

4. Note the position of the attenuator-to-bracket mounting screws in the bracket slots. They are typically centered in the slot.

Separate Attenuator and Bracket

5. Remove the two (2) pan head Phillips 4×40 × 0.187” attenuator-to-bracket screws.
6. Set the to-be-replaced attenuator aside.

Install Bracket

7. Install the replacement attenuator module into its bracket, again observing the orientation listed in Step #3 above.
8. Insert two (2) pan head Phillips 4×40 × 0.187” mounting screws, finger tighten, and position each screw in the center of the bracket slot. When correctly positioned, aligned, and threaded, tighten the two screws.
9. The attenuator/bracket assembly is ready to be installed into the RF Deck chassis.

Next Steps

10. The next step depends on which attenuator is being replaced. Identify the replacement attenuator port location and skip ahead to that procedure.
    - Port 2 b2 Attenuator:
      - MS4642A / MS4644A: A123 High Band Step Attenuator, Port 2 b2, 40 GHz – No ND – 68570
      - MS4645A / MS4647A: A123 High Band Step Attenuator, Port 2 b2, 70 GHz – No ND – 66050
      - Section 13-17, “Option 061/062 - Port 2 b2/Port 1 b1 Attenuators - Installing” on page 13-51
    - Port 1 Source Attenuator:
      - MS4642A / MS4644A: A121 High Band Step Attenuator, Port 1 Source, 40 GHz – No ND – 66052
      - MS4645A / MS4647A: A121 High Band Step Attenuator, Port 1 Source, 70 GHz – No ND – 66050
      - Section 13-36, “Option 061/062 - Port 1 Source Modules - Installing” on page 13-107
    - Port 2 Source Attenuator:
      - MS4642A / MS4644A: A122 High Band Step Attenuator, Port 2 Source, 40 GHz – No ND – 66052
      - MS4645A / MS4647A: A122 High Band Step Attenuator, Port 2 Source, 70 GHz – No ND – 66050
      - Section 13-37, “Option 062 - Port 2 Source Modules - Removing” on page 13-109
    - Port 1 b1 Attenuator:
      - MS4642A / MS4644A: A120 High Band Step Attenuator, Test, Port 1 b1, 40 GHz – No ND – 68570
      - MS4645A / MS4647A: A120 High Band Step Attenuator, Port 1 b1, 70 GHz – No ND – 66050
      - Section 13-17, “Option 061/062 - Port 2 b2/Port 1 b1 Attenuators - Installing” on page 13-51

13-17 Option 061/062 - Port 2 b2/Port 1 b1 Attenuators - Installing

Use

Use this procedure to install the Option 061/062 High Band Step Attenuators into Port 2 b2 or Port 1 b1. This procedure is only for instruments equipped with Option 061 or Option 062 and only for Port 2 b2 and Port 1 b1. These port module groups are consist of only one module and can be easily removed without disassembling other components.

To replace the Port 2 Source Attenuator on instrument equipped with Option 061, use the following procedures:

- Section 13-31, “Option 051/061 - Port 2 Source Modules - Removing” on page 13-97
- Section 13-32, “Option 051/061 - Port 2 Source Modules - Preparing” on page 13-100
- Section 13-33, “Option 051/061 - Port 2 Source Modules - Installing” on page 13-101

To replace the Port 2 Source Attenuator on instrument equipped with Option 062, use the following procedures:

- Section 13-37, “Option 062 - Port 2 Source Modules - Removing” on page 13-109
- Section 13-38, “Option 062 - Port 2 Source Modules - Preparing” on page 13-113
- Section 13-39, “Option 062 - Port 2 Source Modules - Installing” on page 13-114

Parts and Applicability

See “Parts and Applicability” on page 13-42 above for part numbers and instrument applicability.

Procedure

Position Module

1. Position the Attenuator Module Bracket Assembly in the RF Deck with its ribbon cable connector facing the rear panel.
   - See Figure 13-11, “Option 061 - A123 Port 2 b2 and A121 Port 1 Source Attenuators” on page 13-38 above for location in instruments equipped with Option 061.
   - See Figure 13-12, “Option 062 - A123, A122, A121, and A120 Attenuators” on page 13-40 above for installation location in instruments equipped with Option 062.
   - See Figure 13-13, “High Band Step Attenuator - Bracket Orientation and Assembly” on page 13-48 above for bracket installation and general orientation.
2. If the ribbon cable was disconnected at the A18 PCB, connect the replacement attenuator ribbon cable to the appropriate connector on the A18.
   - The left side Port 2 b2 attenuator ribbon cable connects to the A18 RF Control PCB Assembly connector J4.
   - The right side Port 1 b2 attenuator ribbon cable connects to the A18 PCB connector J2.
3. Place the attenuator/bracket assembly over the threaded chassis studs and loosely thread on the two (2) M3 × 0.5 mm kep nuts.
4. Carefully align the Attenuator Module J2 RF connector with the matching front panel connector. Tighten finger tight and the reverse for one-half turn.

Torque RF Connectors

5. Torque the attenuatorJ2 RF connector to 8 lbf · in.
6. Attach the semi-rigid coaxial cable to the attenuator J1 RF connector. Make sure it is correctly aligned and threaded. Tighten finger tight and then torque to 8 lbf · in.
7. Tighten the two kep nuts.

Check Connections

8. Check that all cable connections are correctly made and fully seated in their connectors.
9. Check that all RF connections are correctly aligned, threaded, and torqued.

Next Steps

10. If no other replacement modules are required, skip ahead to Section 13-40, “RF Deck Bottom Side - Port Group Modules - Completion” on page 13-116 below to complete the replacement.

13-18 Side-Attached Modules - Standard/All Options - Removing

Use

Use this procedure to remove “side-attached” modules from multi-module port groups regardless of location and regardless if the port group is connected to the A108 HBTS/VITS.

The general procedure is to remove any attached semi-rigid coaxial cables, disconnect any signal/power cables (if present) from the A18 RF Control PCB Assembly, loosen any bracket-to-chassis hardware (if present), and finally loosen and then remove RF connections between the to-be-replaced module and the rest of port group components. Note that the side-attached modules vary depending on the instrument model and their location in the port groups.

Identification

Side-attached modules are present in all instrument models with any option combination although the module interconnections vary with the equipped option. The side-attached modules can be removed and replaced without disassembling the rest of the port module group to which they belong.

- MS4642A / MS4644A:
  - A118 Low Band Bridge – ND70078 – 64016
  - A119 Low Band Bridge – ND70078 – 64016
- MS4645A / MS4647A:
  - A118 Low Band Bridge – ND70078 – 64016
  - A119 Low Band Bridge – ND70078 – 64016
  - Add the following to the list
- MS4642A / MS4644A (with Option 051, 061 and 062):
  - A109 Port 1 Level Detector, K Connector, 40 GHz - ND72124 - 67147-1
  - A110 Port 2 Level Detector, K Connector, 40 GHz - ND72125 - 67147-2
- MS4645A / MS4647A (with Option 051, 061 and 062):
  - A109 Port 1 Level Detector, V Connector, 70 GHz - ND72126 - 67389-1
  - A110 Port 2 Level Detector, V Connector, 70 GHz - ND72127 - 67389-2
- These modules are used on the indicated instrument models with the indicated combination of options.

There are two basic configurations for side-attached modules:

- Instruments with Standard No Options
- Instruments with Option 051/061/062

The three figures below shown the side-attached modules for each major instrument model equipped with Standard No Options:

- Figure 13-14, “Side-Attached Modules - MS4642A - Standard No Options” on page 13-54
- Figure 13-15, “Side-Attached Modules - MS4644A - Standard No Options” on page 13-55
- Figure 13-16, “Side-Attached Modules - MS4645A / MS4647A - Standard No Options” on page 13-56
- Figure 13-16, “Side-Attached Modules - MS4645A / MS4647A - Standard No Options” on page 13-56

The figure below shows the module configuration for all instrument models equipped with Option 051/061/062:

- Figure 13-17, “Side-Attached Modules - MS4640A - Option 051/061/062 - MS4647A Shown” on page 13-57

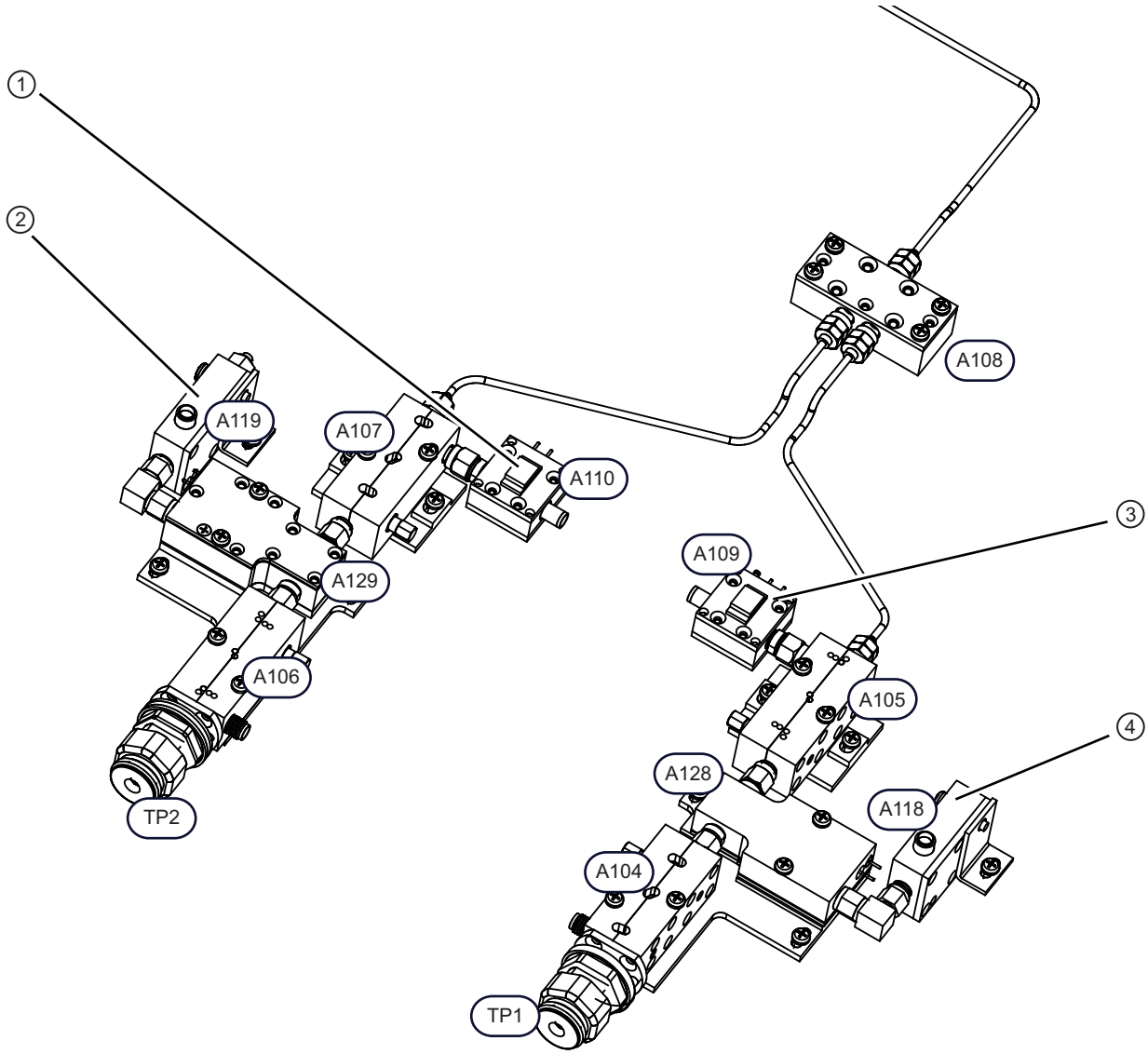

MS4642A VNA with Standard No Options	
1. A110 – Port 2 Level Detector, 40 GHz, K Connector – ND70094 – 67417-1 2. A119 – Low Band Bridge – ND70078 – 64016	3. A109 Port 1 Level Detector, 40 GHz, K Connector – ND70095 – 67417-2 4. A118 – Low Band Bridge – ND70078 – 64016

Figure 13-14. Side-Attached Modules - MS4642A - Standard No Options

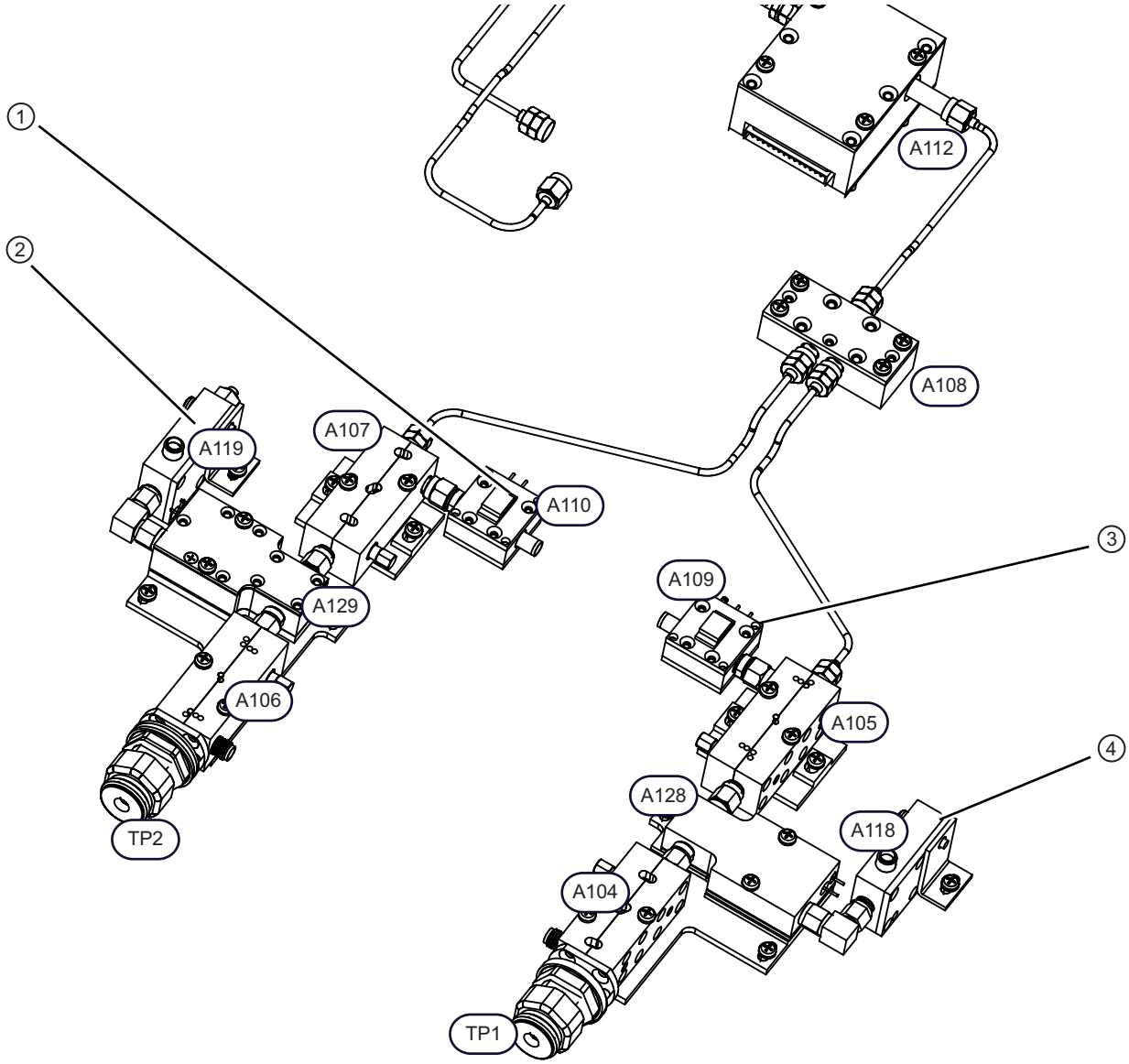

MS4644A VNA with Standard No Options	
1. A110 – Port 2 Level Detector, K Connector, 40 GHz – ND70094 – 67417-1	3. A109 Port 1 Level Detector, K Connector, 40 GHz – ND70095 – 67417-1
2. A119 – Low Band Bridge – ND70078 – 64016	4. A118 – Low Band Bridge – ND70078 – 64016

Figure 13-15. Side-Attached Modules - MS4644A - Standard No Options

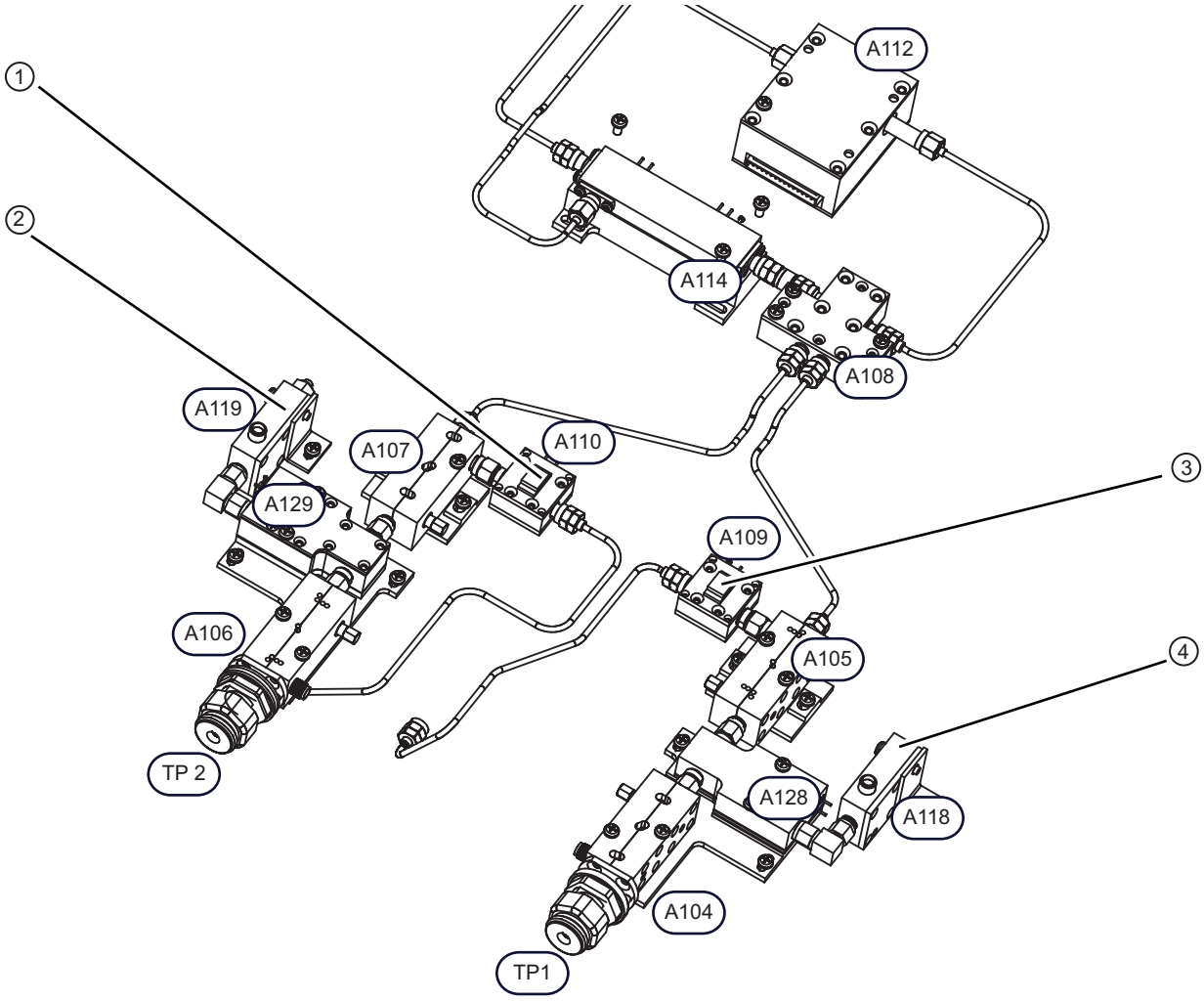

MS4645A / MS4647A VNA with Standard No Options shown. Between the Front Panel and A108 VITS, the module identification and mechanical configuration is the same for all instrument models equipped with Standard No Options.	1. A110 – Port 2 Level Detector, V Connector, 70 GHz – ND70096 – 67389-1 2. A119 – Low Band Bridge – ND70078 – 64016 3. A109 – Port 1 Level Detector, V Connector, 70 GHz – ND70097 – 67389-2 4. A118 – Low Band Bridge – ND70078 – 64016A119 – Low Band Bridge – ND70078 – 64016

Figure 13-16. Side-Attached Modules - MS4645A / MS4647A - Standard No Options

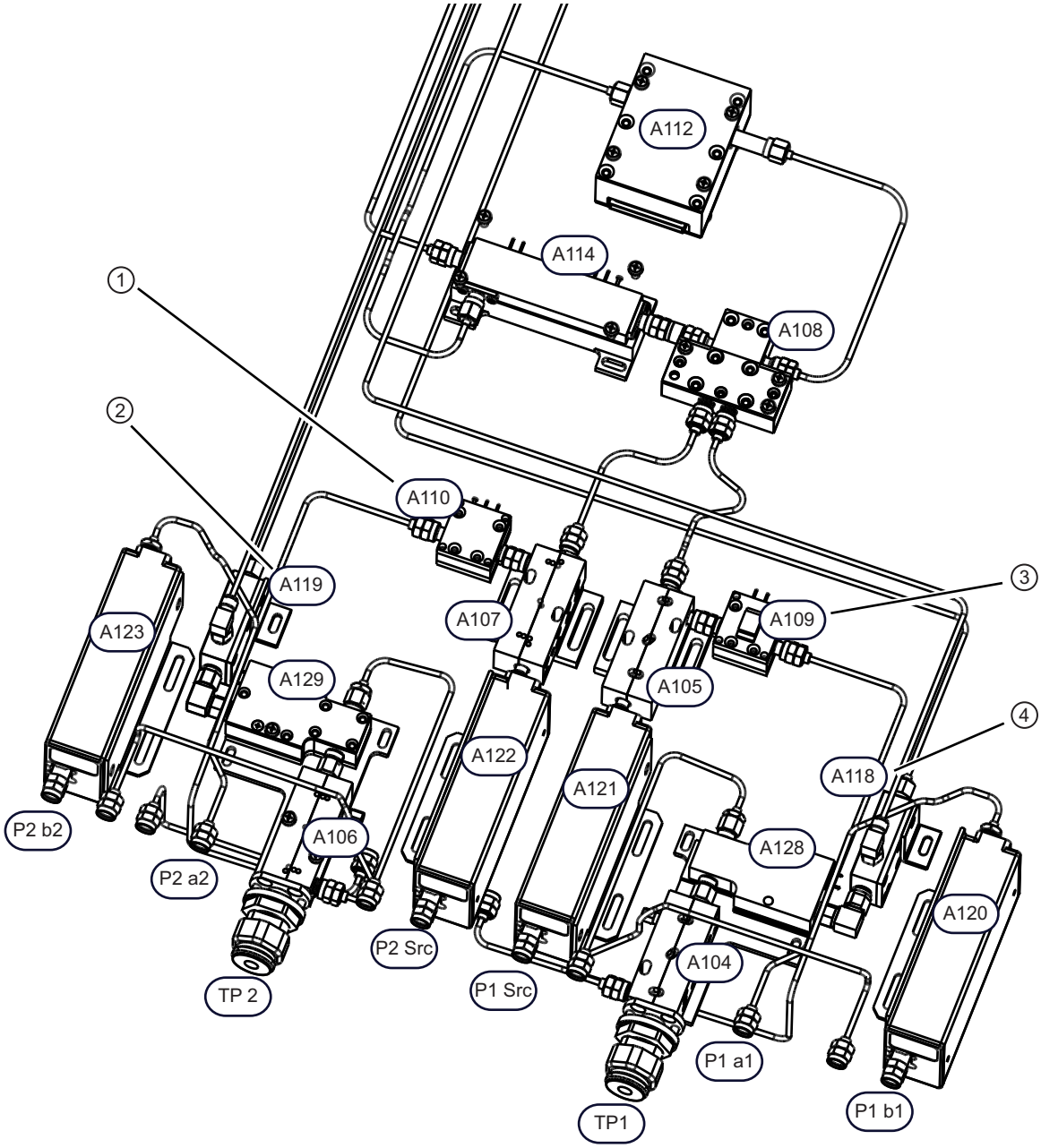

Figure 13-17. Side-Attached Modules - MS4640A - Option 051/061/062 - MS4647A Shown (1 of 2)

Common Side Attached Module Configuration for All Models

MS4645A / MS4647A VNA with Option 062 shown.

Use this figure to identify side-attached modules for all instrument models equipped with Option 051, 061, or 062. Between the Front Panel and A108 HBTS/VITS, the module Engineering Reference Number identification and mechanical configuration is the same for all instrument models. As noted below, the part name and part numbers change depending on if the module is for an MS4642A / MS4644A or a MS4645A / MS4647A instrument.

1. A110 Port 2 Level Detector
   - MS4642A / MS4644A: A110 – Port 2 Level Detector, 40 GHz, K Connector – ND72125 – 67417-2
   - MS4645A / MS4647A: A110 – Port 2 Level Detector, V Connector, 70 GHz – ND72127 – 67389-2
2. A119 Low Band Bridge
   - MS4642A / MS4644A: A119 Low Band Bridge – ND70078 – 64016
   - MS4645A / MS4647A: A119 Low Band Bridge – ND70078 – 64016
3. A109 Port 1 Level Detector
   - MS4642A / MS4644A: A109 Port 1 Level Detector, 40 GHz, K Connector – ND72124 – 67417-1
   - MS4645A / MS4647A: A109 – A109 Port 1 Level Detector, V Connector, 70 GHz – ND72126 – 67389-1
4. A118 Low Band Bridge
   - MS4642A / MS4644A: A118 Low Band Bridge – ND70078 – 64016
   - MS4645A / MS4647A: A118 Low Band Bridge – ND70078 – 64016

Figure 13-17. Side-Attached Modules - MS4640A - Option 051/061/062 - MS4647A Shown (2 of 2)

Parts and Applicability

The side-attached modules are listed below. They are present in every instrument model with any combination of options.

- MS4642A / MS4644A with Standard No Options:
  - A109 Port 1 Level Detector, K Connector, 40 GHz – ND70095 – 67417-2
  - A110 Port 2 Level Detector, K Connector, 40 GHz – ND70094 – 67417-1
- MS4645A / MS4647A with Standard No Options:
  - A109 Port 1 Level Detector, V Connector, 70 GHz – ND70097 – 67389-2
  - A110 Port 2 Level Detector, V Connector, 70 GHz – ND70096 – 67389-1
- MS4645A / MS4647A with Option. 051, 061 and 062:
  - A109 Port 1 Level Detector, V Connector, 70 GHz - ND72126 - 67389-1
  - A110 Port 2 Level Detector, V Connector, 70 GHz - ND72127 - 67389-2
- MS4642A / MS4644A: A118 Low Band Bridge – ND70078 – 64016
- MS4645A / MS4647A: A118 Low Band Bridge – ND70078 – 64016
- MS4642A / MS4644A: A119 Low Band Bridge – ND70078 – 64016
- MS4645A / MS4647A: A119 Low Band Bridge – ND70078 – 64016

Procedure

Common Procedures

1. Prepare work area, work surface, and observe safety issues.

- See Section 7-4 “Common - Prepare Work Area and Safety” on page 7-9.

2. Remove Outer Cover.

- See Section 7-5 “Common - Remove Outer Cover” on page 7-10.

3. Remove Inner Top Cover.
   - See Section 7-6 “Common - Remove Inner Cover” on page 7-13.
4. The Front Panel can stay in place.
   - To remove it, see:
     - Section 10-3 “Remove the Phase 1 Front Panel Assembly” on page 10-3
     - Section 10-4 “Remove the Phase 2 Front Panel Assembly” on page 10-11
5. Position the instrument so that it is upside down, with the RF Deck up.

Locate the Installed Option and Port Group

6. Using one of the figures below or the table cross reference to locate your instrument model and equipped option and then find the side-attached module to be replaced.
   - Figure 13-14, “Side-Attached Modules - MS4642A - Standard No Options” on page 13-54
   - Figure 13-15, “Side-Attached Modules - MS4644A - Standard No Options” on page 13-55
   - Figure 13-16, “Side-Attached Modules - MS4645A / MS4647A - Standard No Options” on page 13-56
   - Figure 13-17, “Side-Attached Modules - MS4640A - Option 051/061/062 - MS4647A Shown” on page 13-57

Disconnect Signal/Power Harness

7. If the module is equipped with a one or more signal/power cable harnesses, disconnect them from their destination connectors, usually on the A18 RF Control PCB Assembly.

Disconnect Semi-Rigid Coaxial Cables

8. By definition, side-attached modules have one or more attached semi-rigid coaxial cables. Use a 5/16” torque end wrench set to 8 lbf · in to loosen the coaxial cable connector.
9. Using finger pressure, remove the coaxial cables from their module connectors and then bend the coaxial cable slightly away from the module.

Loosen RF Connections

10. Using a two end wrenches (a plain end wrench and a torque wrench set to 8 lbf · in), loosen the RF connection to the next module in the port module group. Do not fully remove.
11. If the module is mounted on a bracket, remove the bracket-to-chassis hardware, and then, if accessible, remove the bracket-to-module hardware. If the bracket-to-module hardware is not accessible, remove the bracket later during preparation procedure below.
12. Disconnect the RF connection to the next module and remove the to-be-replaced module.

13-19 Side-Attached Modules - Preparing

Use this procedure to prepare a replacement side-attached module.

Parts and Applicability

See Section 13-18, “Side-Attached Modules - Standard/All Options - Removing” on page 13-53 above for a listing of the modules that use this procedure.

Procedure

1. If the module does not have a bracket, skip ahead to Step #3 below.
2. If the module has an attached bracket, do the sub-steps below:
   - **a.** Note the module and bracket orientation.
   - **b.** Note the hardware orientation in the bracket mounting slot.
   - **c.** Loosen the fastening hardware (typically a pan head Phillips screws) and then set aside the to-be-replaced module.
   - **d.** Observing the orientation above, install the bracket on the module and then thread and tighten the module-to-bracket mounding hardware.
3. Remove any protective covers from the replacement module ports.
4. The replacement module is ready to install.

13-20 Side-Attached Modules - Installing

Use this procedure to install a side-attached module to an RF Deck Bottom Side port module group.

Parts and Applicability

See Section 13-18, “Side-Attached Modules - Standard/All Options - Removing” on page 13-53 above for a listing of the modules that use this procedure.

Procedure

1. Place the module loosely in position in the RF Deck Bottom Side.
2. If the module has an attached bracket, loosely attach the bracket-to-chassis mounting hardware. Do not tighten.
3. Correctly align and thread the RF connection between the replacement module and the adjacent component.
4. Tighten the RF connection finger tight.
5. Tighten the bracket-to-chassis hardware.
6. Using two end wrenches (a plain end wrench and a torque end wrench set to 8 lbf · in), torque the RF connection.
7. Bend the semi-rigid coaxial connector into place.
8. When correctly aligned and threaded, tighten finger tight.
9. Torque the RF connection to 8 lbf · in.

Next Steps

10. If no other replacement modules are required, skip ahead to Section 13-40, “RF Deck Bottom Side - Port Group Modules - Completion” on page 13-116 below to complete the replacement.

13-21 Standard No Options - Test Port 2 Modules - Removing

Use

Use this procedure to access one or more modules within the Test Port 2 port module group for VNAs equipped with Standard No Options. Note that the Test Port 2 port module group is attached to the A108 HBTS/VITS and the A108 switch must be carefully removed before the port group can be disassembled. The basic procedure is to remove the A108 switch and then disassemble the port group module-by-module until the to-be-replaced module is removed.

Identification

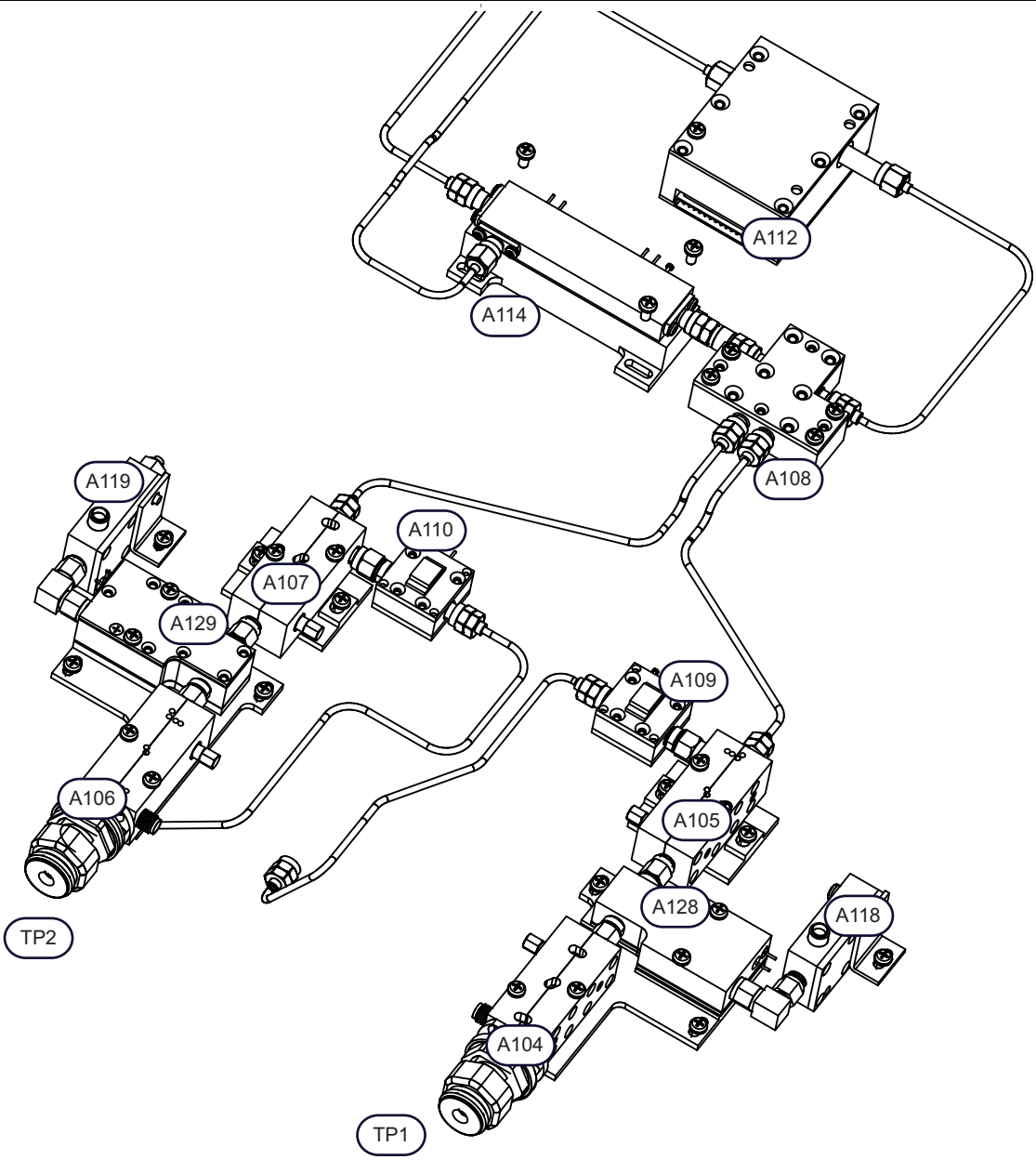

Figure 13-18. Identification - Standard No Options - Test Port 2 Modules (1 of 2)

Test Port 2 Port Modules - Standard No Options
- Shown for MS4645A / MS4647A with Standard No Options.
- Mechanical configuration is the same for MS4642A / MS4644A.

RF Control Modules
- MS4642A / MS4644A: A108 High Band Transfer Switch, 40 GHz – ND70092 – 66221
- MS4645A / MS4647A: A108 V Integrated High Band Transfer Switch, 70 GHz – ND70093 – 66619

Test Port 2 Modules
- A107 Referenced Coupler
  - MS4642A / MS4644A: A107 Reference Coupler, 40 GHz – No ND – 66487
  - MS4645A / MS4647A: A107 Reference Coupler, 70 GHz – No ND – 65270
- A110 Port 2 Level Detector
  - MS4642A / MS4644A: A110 – Port 2 Level Detector, 40 GHz, K Connector – ND70094 – 67417-1
  - MS4645A / MS4647A: A110 – Port 2 Level Detector, V Connector, 70 GHz – ND70096 – 67389-1
- A129 Diplexer/Bias Tee
  - MS4642A / MS4644A: A129 Diplexer/Bias Tee Module, Port 2, 40 GHz – ND73941 – 74277
  - MS4645A / MS4647A: A129 Diplexer/Bias Tee Module, Port 2, 70 GHz – ND73943 – 74278
- A119 Low Band Bridge
  - MS4642A / MS4644A: A119 Low Band Bridge – ND70078 – 64016
  - MS4645A / MS4647A: A119 Low Band Bridge – ND70078 – 64016
- A106 Test Coupler
  - MS4642A / MS4644A: A106 Test Coupler, 40 GHz – No ND – 66480
  - MS4645A / MS4647A: A106 Test Coupler, 70 GHz – No ND – 66245
- Test Port Adapter
  - MS4642A / MS4644A: Test Port Adapter K Connector – No ND – 34YK50C
  - MS4645A / MS4647A: Test Port Adapter V Connector – No ND – 34YV50C

Figure 13-18. Identification - Standard No Options - Test Port 2 Modules (2 of 2)

Parts and Applicability

Use this procedure to remove and replace the following modules:

- MS4642A / MS4644A:
  - A106 Test Coupler, 40 GHz – No ND – 66480
  - A107 Reference Coupler, 40 GHz – No ND – 66487
  - A110 Port 2 Level Detector, 40 GHz, K Connector – ND70094 – 67417-1
  - A119 Low Band Bridge – ND70078 – 64016
  - A129 Diplexer/Bias Tee Module, Port 2, 40 GHz – ND73941 – 74277
  - Test Port Adapter K Connector – No ND – 34YK50C
- MS4645A / MS4647A:
  - A106 Test Coupler, 70 GHz – No ND – 66245
  - A107 Reference Coupler, 70 GHz – No ND – 65270
  - A110 Port 2 Level Detector, V Connector, 70 GHz – ND70096 – 67389-1
  - A119 Low Band Bridge – ND70078 – 64016
  - A129 Diplexer/Bias Tee Module, Port 2, 70 GHz – ND73943 – 74278
  - Test Port Adapter V Connector – No ND – 34YV50C

Procedure

Use this procedure to disassemble and remove a module from the Test Port 2 module group for both MS4642A / MS4644A and MS4645A / MS4647A VNAs equipped with Standard No Options. Disassemble the port group until the to-be-replaced module is available and then exit the procedure and start the preparation procedure in the second section following.

Common Procedures

1. Prepare work area, work surface, and observe safety issues.
   - See Section 7-4 “Common - Prepare Work Area and Safety” on page 7-9.
2. Remove the Outer Cover.
   - See Section 7-5 “Common - Remove Outer Cover” on page 7-10.
3. Remove the Inner Top Cover.
   - See Section 7-6 “Common - Remove Inner Cover” on page 7-13.
4. The Front Panel can stay in place.
   - To remove it, see:
     - Section 10-3 “Remove the Phase 1 Front Panel Assembly” on page 10-3
     - Section 10-4 “Remove the Phase 2 Front Panel Assembly” on page 10-11
5. Position the instrument so that it is upside down, with the RF Deck up.

Locate the Installed Option and Port Group

6. Use Figure 13-21, “Identification - Option 051 - Port 1 Source Modules” on page 13-86 above to locate the required port group module.

Note	This and the following procedures use engineering “A” reference numbers or ERNs (e.g. A108) for module identification and to keep the procedure as short as possible. The figure preceding each procedure lists the names and part numbers of each module. Note that each figure lists the modules for both MS4642A / MS4644A VNAs and modules for MS4645A / MS4647A VNAs for the same equipped option.

Remove the A108 HBTS/VITS

7. Remove the A108 HBTS/VITS, following the procedure steps in Section 12-9 “Remove A108 HBTS/VITS Module – ND70092 or ND70093” on page 12-16 above in Chapter 12.
   - MS4642A / MS4644A: A108 High Band Transfer Switch, 40 GHz – ND70092 – 66221
   - MS4645A / MS4647A: A108 V Integrated High Band Transfer Switch, 70 GHz – ND70093 – 66619

Disconnect the A110

8. Use a 5/16” 8 lbf · in torque end wrench to loosen and then remove the RF connection between the A107 and the A110.
   - MS4642A / MS4644A: A107 Reference Coupler, 40 GHz – No ND – 66487
   - MS4645A / MS4647A: A107 Reference Coupler, 70 GHz – No ND – 65270
   - MS4642A / MS4644A: A110 Port 2 Level Detector, 40 GHz, K Connector – ND70094 – 67417-1
   - MS4645A / MS4647A: A110 Port 2 Level Detector, V Connector, 70 GHz – ND70096 – 67389-1
9. Bend the A110 slightly out of the way.

Remove the A107

10. Remove any semi-rigid coaxial cables connected to the A107.
    - MS4642A / MS4644A: A107 Reference Coupler, 40 GHz – No ND – 66487

- MS4645A / MS4647A: A107 Reference Coupler, 70 GHz – No ND – 65270

11. Use a 5/16" torque end wrench set to 8 lbf · in to loosen the RF connection between the A107 and the A129. Do not remove the RF connection.

12. Remove the bracket-to-chassis hardware. Remove the module-to-bracket hardware.

13. Remove the RF connection between the A107 and the A129.

- MS4642A / MS4644A: A129 Diplexer/Bias Tee Module, Port 2, 40 GHz – ND73941 – 74377
- MS4645A / MS4647A: A129 Diplexer/Bias Tee Module, Port 2, 70 GHz – ND73943 – 74278

14. Remove the A107 from the chassis.

- If the A107 is to be replaced, skip ahead to Section 13-22, "Standard No Options - Test Port 2 Modules - Installing" on page 13-68.
- If the A129 or A106 module is to be replaced, remove the A107 bracket and continue below.

Disconnect the A119

15. Remove the A119 bracket-to-chassis hardware. The bracket stays attached to the A119.

- MS4642A / MS4644A: A119 Low Band Bridge – ND70078 – 64016
- MS4645A / MS4647A: A119 Low Band Bridge – ND70078 – 64016

16. Use a 8 lbf · in torque end wrench and a plain end wrench to loosen the elbow RF connection between the A119 and the A129. Remove the elbow RF connector from the A129 and leave it on the A119.

17. Bend the A119 slightly out of the way.

- The removal procedure for the A119 is covered above in Section 13-18, "Side-Attached Modules - Standard/All Options - Removing" on page 13-53.

Remove the A129

18. Remove the bracket-to-chassis hardware holding the A129 and the A106 to their shared bracket.

- MS4642A / MS4644A: A106 Test Coupler, 40 GHz – No ND – 66480
- MS4645A / MS4647A: A106 Test Coupler, 70 GHz – No ND – 66245
- MS4642A / MS4644A: A129 Diplexer/Bias Tee Module, Port 2, 40 GHz – ND73941 – 74377
- MS4645A / MS4647A: A129 Diplexer/Bias Tee Module, Port 2, 70 GHz – ND73943 – 74278

19. Remove the module-to-bracket hardware holding the A129 to the bracket.

20. Remove the module-to-bracket hardware holding the A106 to the bracket.

21. Use a 5/16" torque end wrench set to 8 lbf · in to loosen the RF Connection between the A129 and the A106 and then remove the connection.

22. Remove the A129 from the chassis.

- If the A129 is to be replaced, skip ahead to Section 13-22, "Standard No Options - Test Port 2 Modules - Installing" on page 13-68.
- If the A106 module is to be replaced, continue below.

Remove the Test Port 2

23. Use a 1/2" torque end wrench set to 50 lbf · in to loosen the Test Port Adapter on Test Port 2.

- MS4642A / MS4644A: Test Port Adapter K Connector – No ND – 34YK50C
- MS4645A / MS4647A: Test Port Adapter V Connector – No ND – 34YV50C
- The detailed removal/installation procedure is in Section 8-2, "Replace Front Panel Test Ports" on page 8-2 in Chapter 8.
- See Figure 8-1, "Test Port Connectors and Related Hardware" on page 8-2.

24. Use a 13/16" socket on a torque wrench set to 15 lbf · ft to loosen the Test Port nut.

- Recommended is a Craftsman 009-44594 or equivalent torque wrench set to 15 lbf · ft with a 13/16” deep socket on a 3/8” drive.

25. When loose, hand remove the Test Port Nut and then remove the Test Port Thrust washer.

Remove the A106

26. If not already done so, remove the module-to-bracket hardware holding the A106 to the bracket.

- MS4642A / MS4644A: A106 Test Coupler, 40 GHz – No ND – 66480
- MS4645A / MS4647A: A106 Test Coupler, 70 GHz – No ND – 66245

27. Remove the A106 from the chassis. Remove the mounting bracket from the chassis.

- If the A106 is to be replaced, skip ahead to Section 13-22, “Standard No Options - Test Port 2 Modules - Installing” on page 13-68.

13-22 Standard No Options - Test Port 2 Modules - Installing

Use these procedures to install one or more components of the Test Port 2 port module group and instrument equipped with Standard No Options.

Identification

See Figure 13-18, “Identification - Standard No Options - Test Port 2 Modules” on page 13-63 above.

Procedure

Starting Point

1. The starting point in this procedure depends on how many modules were removed above in Section 13-21, “Standard No Options - Test Port 2 Modules - Removing” on page 13-62.
2. Skip ahead to the indicated step depending on which module is to be replaced. It is assumed that the to-be-replaced module and its companion modules between it and the A108 have already been removed.
3. Identify the module to be replaced and skip ahead to that procedure step:
   - A106 – Skip ahead to Step #4 - Install the A106.
     - MS4642A / MS4644A: A106 Test Coupler, 40 GHz – No ND – 66480
     - MS4645A / MS4647A: A106 Test Coupler, 70 GHz – No ND – 66245
   - A129 – Skip ahead to Step #12 - Install the A129.
     - MS4642A / MS4644A: A129 Diplexer/Bias Tee Module, Port 2, 40 GHz – ND73941 – 74377
     - MS4645A / MS4647A: A129 Diplexer/Bias Tee Module, Port 2, 70 GHz – ND73943 – 74278
   - A107 – Skip ahead to Step #16 - Install the A107.
     - MS4642A / MS4644A: A107 Reference Coupler, 40 GHz – No ND – 66487
     - MS4645A / MS4647A: A107 Reference Coupler, 70 GHz – No ND – 65270

Install the A106

4. Install the A106.
   - MS4642A / MS4644A: A106 Test Coupler, 40 GHz – No ND – 66480
   - MS4645A / MS4647A: A106 Test Coupler, 70 GHz – No ND – 66245
5. Place the A106/A129 shared bracket into the chassis. Loosely insert the two bracket-to-chassis screws that hold it in place.
6. Place the A106 into position with its threaded end through the front panel. Loosely insert the two module-to-bracket screws.
7. Tighten the bracket-to-chassis screws.
8. Tighten the module-to-bracket screws.

Install the Test Port 2 Test Port Adapter

9. Install the Test Port Adapter on Test Port 2.
   - MS4642A / MS4644A: Test Port Adapter K Connector – No ND – 34YK50C
   - MS4645A / MS4647A: Test Port Adapter V Connector – No ND – 34YV50C
10. From the front panel, add the test port thrust washer and then the test port nut. Finger tighten. Then use a 13/16” deep socket and a torque socket wrench to torque to 15 lbf · ft.
11. Carefully align the center pin of the test port connector, and make sure it is correctly threaded. Tighten finger tight and then use a 1/2” torque end wrench to torque to 60 lbf · in.

Install the A129

12. Install the A129.

- MS4642A / MS4644A: A129 Diplexer/Bias Tee Module, Port 2, 40 GHz – ND73941 – 74377
- MS4645A / MS4647A: A129 Diplexer/Bias Tee Module, Port 2, 70 GHz – ND73943 – 74278

13. Place the A129 into position next to the A106. Carefully align their RF connectors and make sure they are correctly threaded. Tighten the connection finger tight.

14. Insert the two module-to-bracket screws and then tighten.

15. Torque the RF connection between the A106 and the A129 to 8 lbf · in.

Install the A107

16. Install the A107.

- MS4642A / MS4644A: A107 Reference Coupler, 40 GHz – No ND – 66487
- MS4645A / MS4647A: A107 Reference Coupler, 70 GHz – No ND – 65270

17. Place the A107 bracket into the chassis. Loosely insert two bracket-to-chassis screws.

18. Make sure the A107 RF connector is correctly aligned and threaded with the A129 RF connector. Tighten the connection finger tight.

Install the A108

19. Install the A108 HBTS/VITS back into its socket on the A18 PCB by carefully following the procedure in Section 12-11, “Install A108 HBTS/VITS – ND70092 or ND70093” on page 12-20 above.

- MS4642A / MS4644A: A108 High Band Transfer Switch, 40 GHz – ND70092 – 66221
- MS4645A / MS4647A: A108 V Integrated High Band Transfer Switch, 70 GHz – ND70093 – 66619
- All Instruments: A18 RF Control PCB Assembly – ND70068 – 61929-3

Connect the A119

20. Connect the side-attached A119.

- MS4642A / MS4644A: A119 Low Band Bridge – ND70078 – 64016
- MS4645A / MS4647A: A119 Low Band Bridge – ND70078 – 64016

21. Bend the semi-rigid coaxial cables attached to the A119 so that the elbow RF connector between the A119 and the A129 is correctly aligned and the A119 bracket is aligned with its chassis mounting hole.

22. Loosely insert the bracket-to-chassis screws.

23. Make sure both of the RF elbow connectors are correctly aligned, threaded and then tighten finger tight.

Tighten and Torque A119 and A129

24. Tighten the A119 bracket-to-chassis screws.

- MS4642A / MS4644A: A119 Low Band Bridge – ND70078 – 64016
- MS4645A / MS4647A: A119 Low Band Bridge – ND70078 – 64016

25. Tighten the A129 module-to-chassis screws.

- MS4642A / MS4644A: A129 Diplexer/Bias Tee Module, Port 2, 40 GHz – ND73941 – 74377
- MS4645A / MS4647A: A129 Diplexer/Bias Tee Module, Port 2, 70 GHz – ND73943 – 74278

26. Using two end wrenches (a 5/16” plain end wrench and a 5/16” torque end wrench set to 8 lbf · in), torque the two elbow RF connections.

Connect the A110

27. Connect the side-attached A110.

- MS4642A / MS4644A: 110 Port 2 Level Detector, 40 GHz, K Connector – ND70094 – 67417-1
- MS4645A / MS4647A: A110 Port 2 Level Detector, V Connector, 70 GHz – ND70096 – 67389-1

28. Bend the semi-rigid coaxial cables attached to the A110 so that the RF connectors between the A110 and the A107 are correctly aligned and threaded. Tighten the RF connection finger tight.

29. Make sure the A110 harnesses are correctly and fully inserted into their sockets on the A18 RF Control PCB Assembly.

30. Torque the RF connection between the A110 and the A107 to 8 lbf · in.

- MS4642A / MS4644A: A107 Reference Coupler, 40 GHz – No ND – 66487
- MS4645A / MS4647A: A107 Reference Coupler, 70 GHz – No ND – 65270

Final Checks

31. Check that all cables are correctly routed and firmly seated in their connectors.

32. Check that all semi-rigid coaxial cables are correctly aligned, threaded, and torqued.

Next Steps

33. If no other replacement modules are required, skip ahead to Section 13-40, “RF Deck Bottom Side - Port Group Modules - Completion” on page 13-116 below to complete the replacement.

13-23 Standard No Options - Test Port 1 Modules - Removing

Use

Use this procedure to access one or more modules within the Test Port 1 port module group for VNAs equipped with Standard No Options.

Note that the Test Port 1 port module group is attached to the A108 HBTS/VITS and the A108 switch must be carefully removed before the port group can be disassembled. The basic procedure is to remove the A108 switch and then disassemble the port group module-by-module until the to-be-replaced module is removed.

The procedure can be used to disassemble and remove a module from the Test Port 1 module group for both MS4642A / MS4644A and MS4645A / MS4647A VNAs equipped with Standard No Options. Disassemble the port group until the to-be-replaced module is available and then exit the procedure and start the preparation procedure in the second section following.

Identification

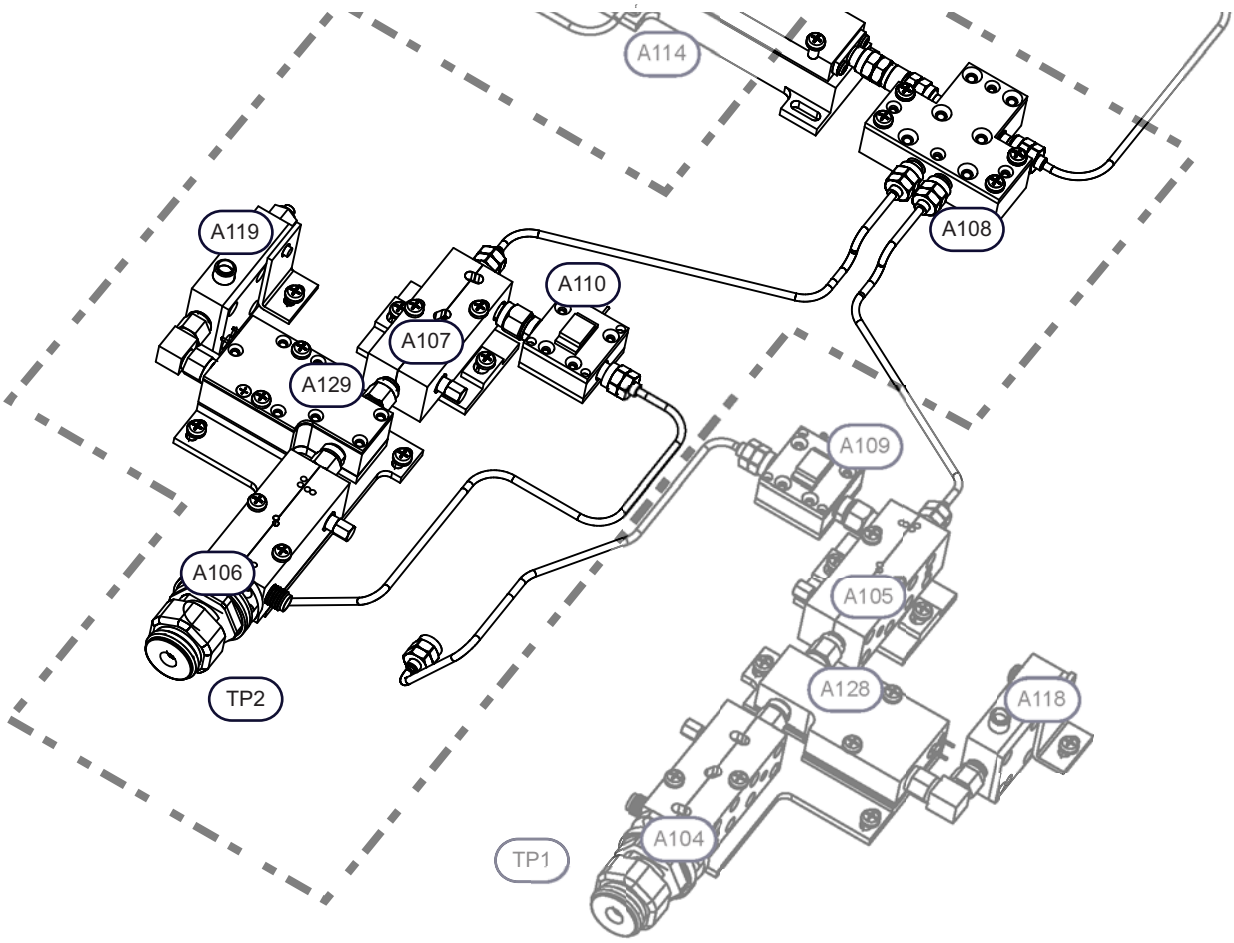

Test Port 1 Port Modules - Standard No Options
- Shown for MS4645A / MS4647A with Standard No Options.
- Mechanical configuration is the same for MS4642A / MS4644A.

RF Control Modules
- MS4642A / MS4644A: A108 High Band Transfer Switch, 40 GHz – ND70092 – 66221
- MS4645A / MS4647A: A108 V Integrated High Band Transfer Switch, 70 GHz – ND70093 – 66619

Test Port 1 Modules
- MS4642A / MS4644A: A105 Reference Coupler, 40 GHz – No ND – 66487
- MS4645A / MS4647A: A105 Reference Coupler, 70 GHz – No ND – 65270
- MS4642A / MS4644A: 110 Port 2 Level Detector, 40 GHz, K Connector – ND70094 – 67417-1
- MS4645A / MS4647A: A110 Port 2 Level Detector, V Connector, 70 GHz – ND70096 – 67389-1
- MS4642A / MS4644A: A128 Diplexer/Bias Tee Module, Port 1, 40 GHz – ND70088 – 66465 or ND73940 – 74277
- MS4645A / MS4647A: A128 Diplexer/Bias Tee Module, Port 1, 70 GHz – ND70090 – 64911 or ND73942 – 74278
- MS4642A / MS4644A: A118 Low Band Bridge – ND70078 – 64016
- MS4645A / MS4647A: A118 Low Band Bridge – ND70078 – 64016
- MS4642A / MS4644A: A104 Test Coupler, 40 GHz – No ND – 66480
- MS4645A / MS4647A: A104 Test Coupler, 70 GHz – No ND – 66245
- MS4642A / MS4644A: Test Port Adapter K Connector – No ND – 34YK50C
- MS4645A / MS4647A: Test Port Adapter V Connector – No ND – 34YV50C

Figure 13-19. Identification - Standard No Options - Test Port 1 Modules

Parts and Applicability

Use this procedure to remove and replace the following modules:

- MS4642A / MS4644A: A105 Reference Coupler, 40 GHz – No ND – 66487
- MS4645A / MS4647A: A105 Reference Coupler, 70 GHz – No ND – 65270
- MS4642A / MS4644A: A110 Port 2 Level Detector, 40 GHz, K Connector – ND70094 – 67417-1
- MS4645A / MS4647A: A110 Port 2 Level Detector, V Connector, 70 GHz – ND70096 – 67389-1
- MS4642A / MS4644A: A128 Diplexer/Bias Tee Module, Port 1, 40 GHz – ND73940 – 74277
- MS4645A / MS4647A: A128 Diplexer/Bias Tee Module, Port 1, 70 GHz – ND73942 – 74278
- MS4642A / MS4644A: A118 Low Band Bridge – ND70078 – 64016
- MS4645A / MS4647A: A118 Low Band Bridge – ND70078 – 64016
- MS4642A / MS4644A: A104 Test Coupler, 40 GHz – No ND – 66480
- MS4645A / MS4647A: A104 Test Coupler, 70 GHz – No ND – 66245

Procedure

Common Procedures

1. Prepare work area, work surface, and observe safety issues.
   - See Section 7-4 “Common - Prepare Work Area and Safety” on page 7-9.
2. Remove the Outer Cover.
   - See Section 7-5 “Common - Remove Outer Cover” on page 7-10.
3. Remove the Inner Top Cover.
   - See Section 7-6 “Common - Remove Inner Cover” on page 7-13.
4. The Front Panel can stay in place.
   - To remove it, see:
     - Section 10-3 “Remove the Phase 1 Front Panel Assembly” on page 10-3
     - Section 10-4 “Remove the Phase 2 Front Panel Assembly” on page 10-11
5. Position the instrument so that it is upside down, with the RF Deck up.

Locate the Installed Option and Port Group

6. Use above to locate the required port group module.

Note	This and the following procedures use engineering “A” reference numbers or ERNs (e.g. A108) for module identification and to keep the procedure as short as possible. The figure preceding each procedure lists the names and part numbers of each module. Note that each figure lists the modules for both MS4642A / MS4644A VNAs and modules for MS4645A / MS4647A VNAs for the same equipped option.

Remove the A108 HBTS/VITS

7. Remove the A108 HBTS/VITS, following the procedure steps in Section 12-9 “Remove A108 HBTS/VITS Module – ND70092 or ND70093” on page 12-16 above in Chapter 12.
   - MS4642A / MS4644A: A108 High Band Transfer Switch, 40 GHz – ND70092 – 66221
   - MS4645A / MS4647A: A108 V Integrated High Band Transfer Switch, 70 GHz – ND70093 – 66619

Disconnect the A109

8. Use a 8 lbf · in torque end wrench to loosen and then remove the RF connection between the A109 and the A105.

- MS4642A / MS4644A: A110 Port 2 Level Detector, 40 GHz, K Connector – ND70094 – 67417-1
- MS4645A / MS4647A: A110 Port 2 Level Detector, V Connector, 70 GHz – ND70096 – 67389-1
- MS4642A / MS4644A: A105 Reference Coupler, 40 GHz – No ND – 66487
- MS4645A / MS4647A: A105 Reference Coupler, 70 GHz – No ND – 65270

9. Bend the A109 slightly out of the way.

- Do not use this procedure to replace the A109. Instead, see the following procedures:
- Section 13-19, “Side-Attached Modules - Preparing” on page 13-60.
- Section 13-20, “Side-Attached Modules - Installing” on page 13-61.

Remove the A105

10. Remove any semi-rigid coaxial cables connected to the A105.

- MS4642A / MS4644A: A105 Reference Coupler, 40 GHz – No ND – 66487
- MS4645A / MS4647A: A105 Reference Coupler, 70 GHz – No ND – 65270

11. Use a 5/16” torque end wrench set to 8 lbf · in to loosen the RF connection between the A105 and the A128. Do not remove the RF connection.

12. Remove the bracket-to-chassis hardware. Remove the module-to-bracket hardware.

13. Remove the RF connection between the A105 and the A128.

14. Remove the A105 from the chassis.

- If the A105 is to be replaced, skip ahead to Section 13-24, “Standard No Options - Test Port 1 Modules - Installing” on page 13-76.
- If either the A128 or A104 module is to be replaced, remove the A105 bracket and continue below.
  - MS4642A / MS4644A: A104 Test Coupler, 40 GHz – No ND – 66480
  - MS4645A / MS4647A: A104 Test Coupler, 70 GHz – No ND – 66245
  - MS4642A / MS4644A: A128 Diplexer/Bias Tee Module, Port 1, 40 GHz – ND73940 – 74277
  - MS4645A / MS4647A: A128 Diplexer/Bias Tee Module, Port 1, 70 GHz – ND73942 – 74278

Disconnect the A118

15. Remove the A118 bracket-to-chassis hardware. The bracket stays attached to the A118.

- MS4642A / MS4644A: A118 Low Band Bridge – ND70078 – 64016
- MS4645A / MS4647A: A118 Low Band Bridge – ND70078 – 64016

16. Use a 5/16” torque end wrench set to 8 lbf · in and a plain end wrench to loosen the elbow RF connection between the A118 and the A128. Remove the elbow RF connector from the A128 and leave it on the A118.

17. Bend the A119 slightly out of the way.

- Do not use this procedure to replace the A118. The removal procedure for the A119 is covered in the following procedures:
- Section 13-18, “Side-Attached Modules - Standard/All Options - Removing” on page 13-53.
- Section 13-19, “Side-Attached Modules - Preparing” on page 13-60.
- Section 13-20, “Side-Attached Modules - Installing” on page 13-61.

Remove the A128

18. Remove the bracket-to-chassis hardware holding the A128 and the A104 to their shared bracket.

- MS4642A / MS4644A: A104 Test Coupler, 40 GHz – No ND – 66480
- MS4645A / MS4647A: A104 Test Coupler, 70 GHz – No ND – 66245
- MS4642A / MS4644A: A128 Diplexer/Bias Tee Module, Port 1, 40 GHz – ND73940 – 74277
- MS4645A / MS4647A: A128 Diplexer/Bias Tee Module, Port 1, 70 GHz – ND73942 – 74278

19. Remove the module-to-bracket hardware holding the A128 to the bracket.

20. Remove the module-to-bracket hardware holding the A104 to the bracket.

21. Use a 5/16" torque end wrench set to 8 lbf · in to loosen the RF connection between the A128 and the A104 and then remove the connection.

22. Remove the A128 from the chassis.

- If the A128 is to be replaced, skip ahead to Section 13-24, "Standard No Options - Test Port 1 Modules - Installing" on page 13-76.
- If the A104 module is to be replaced, continue below.

Remove the Test Port 2

23. Use a 1/2" torque end wrench set to 50 lbf · in to loosen the Test Port Adapter on Test Port 1.

- MS4642A / MS4644A: Test Port Adapter K Connector – No ND – 34YK50C
- MS4645A / MS4647A: Test Port Adapter V Connector – No ND – 34YV50C
- The detailed removal/installation procedure is in Section 8-2, "Replace Front Panel Test Ports" on page 8-2 in Chapter 8.
- See Figure 8-1, "Test Port Connectors and Related Hardware" on page 8-2.

24. Use a 13/16" torque socket wrench set to 15 lbf · ft to loosen the Test Port nut.

- Recommended is a Craftsman 009-44594 or equivalent torque wrench set to 15 lbf · ft with a 13/16" deep socket on a 3/8" drive.

25. When loose, hand remove the Test Port Nut and then remove the Test Port Thrust washer.

Remove the A104

26. If not already done so, remove the module-to-bracket hardware holding the A104 to the bracket.

- MS4642A / MS4644A: A104 Test Coupler, 40 GHz – No ND – 66480
- MS4645A / MS4647A: A104 Test Coupler, 70 GHz – No ND – 66245

27. Remove the A104 from the chassis. Remove the mounting bracket from the chassis.

- If the A104 is to be replaced, skip ahead to Section 13-24, "Standard No Options - Test Port 1 Modules - Installing" on page 13-76.

13-24 Standard No Options - Test Port 1 Modules - Installing

Use these procedures to install one or more components of the Test Port 1 port module group in an instrument equipped with Standard No Options.

Identification

See Figure 13-19, “Identification - Standard No Options - Test Port 1 Modules” on page 13-72 above.

Procedure

Starting Point

1. The starting point in this procedure depends on how many modules were removed above in Section 13-23, “Standard No Options - Test Port 1 Modules - Removing” on page 13-71.
2. Skip ahead to the indicated step depending on which module is to be replaced. It is assumed that the to-be-replaced module and its companion modules between it and the A108 have already been removed.
3. Identify the module to be replaced and skip ahead to that procedure step:
   - A104 – Skip ahead to Step #4 - Install the A104.
     - MS4642A / MS4644A: A104 Test Coupler, 40 GHz – No ND – 66480
     - MS4645A / MS4647A: A104 Test Coupler, 70 GHz – No ND – 66245
   - A128 – Skip ahead to Step #12 - Install the A128.
     - MS4642A / MS4644A: A128 Diplexer/Bias Tee Module, Port 1, 40 GHz – ND73940 – 74277
     - MS4645A / MS4647A: A128 Diplexer/Bias Tee Module, Port 1, 70 GHz – ND73942 – 74278
   - A105 – Skip ahead to Step #16 - Install the A105.
     - MS4642A / MS4644A: A105 Reference Coupler, 40 GHz – No ND – 66487
     - MS4645A / MS4647A: A105 Reference Coupler, 70 GHz – No ND – 65270

Install the A104

4. Install the A104.
   - MS4642A / MS4644A: A104 Test Coupler, 40 GHz – No ND – 66480
   - MS4645A / MS4647A: A104 Test Coupler, 70 GHz – No ND – 66245
5. Place the A104/A128 shared bracket into the chassis. Loosely insert the two bracket-to-chassis screws that hold it in place.
6. Place the A104 into position with its threaded end through the front panel. Loosely insert the two module-to-bracket screws.
7. Tighten the bracket-to-chassis screws.
8. Tighten the module-to-bracket screws.

Install the Test Port 1 Test Port Adapter

9. Install the Test Port Adapter on Test Port 1.
   - MS4642A / MS4644A: Test Port Adapter K Connector – No ND – 34YK50C
   - MS4645A / MS4647A: Test Port Adapter V Connector – No ND – 34YV50C
10. From the front panel, add the test port thrust washer and then the test port nut. Tighten finger tight. Torque the test port nut using a 13/16” deep socket and a torque socket wrench set to 15 lbf · ft.
11. Carefully align the center pin of the test port connector, and make sure it is correctly threaded. Tighten finger tight and then torque the connection using a 1/2” torque end wrench set to 60 lbf · in.

Install the A128

12. Install the A128.

- MS4642A / MS4644A: A128 Diplexer/Bias Tee Module, Port 1, 40 GHz – ND73940 – 74277
- MS4645A / MS4647A: A128 Diplexer/Bias Tee Module, Port 1, 70 GHz – ND73942 – 74278

13. Place the A128 into position next to the A104. Carefully align their RF connectors and make sure they are correctly threaded. Tighten the connection finger tight.

14. Insert the two module-to-bracket screws and then tighten.

15. Torque the RF connection between the A104 and the A128 to 8 lbf · in.

Install the A105

16. Install the A105.

- MS4642A / MS4644A: A105 Reference Coupler, 40 GHz – No ND – 66487
- MS4645A / MS4647A: A105 Reference Coupler, 70 GHz – No ND – 65270

17. Place the A105 bracket into the chassis. Loosely insert two bracket-to-chassis screws.

18. Make sure the A105 RF connector is correctly aligned and threaded with the A128 RF connector. Tighten the connection finger tight.

Install the A108

19. Install the A108 HBTS/VITS back into its socket on the A18 PCB by carefully following the procedure in Section 12-11, “Install A108 HBTS/VITS – ND70092 or ND70093” on page 12-20 above.

- MS4642A / MS4644A: A108 High Band Transfer Switch, 40 GHz – ND70092 – 66221
- MS4645A / MS4647A: A108 V Integrated High Band Transfer Switch, 70 GHz – ND70093 – 66619
- All Instruments: A18 RF Control PCB Assembly – ND70068 – 61929-3

Connect the A118

20. Connect the side-attached A118.

- MS4642A / MS4644A: A118 Low Band Bridge – ND70078 – 64016
- MS4645A / MS4647A: A118 Low Band Bridge – ND70078 – 64016

21. Bend the semi-rigid coaxial cables attached to the A118 so that the elbow RF connector between the A118 and the A128 is correctly aligned and the A118 bracket is aligned with its chassis mounting hole.

22. Loosely insert the bracket-to-chassis screws.

23. Make sure both of the RF elbow connectors are correctly aligned, threaded and then tighten finger tight.

Tighten and Torque A118 and A128

24. Tighten the A118 bracket-to-chassis screws.

25. Tighten the A128 module-to-chassis screws.

26. Using two end wrenches (a 5/16” plain end wrench and a 5/16” torque end wrench set to 8 lbf · in), torque the two elbow RF connections.

Connect the A109

27. Connect the side-attached A109.

- MS4642A / MS4644A: A109 Port 1 Level Detector, 40 GHz, K Connector – ND70095 – 67417-2
- MS4645A / MS4647A: A109 Port 1 Level Detector, 70 GHz, V Connector – ND70097 – 67389-2

28. Bend the semi-rigid coaxial cables attached to the A109 so that the RF connectors between the A109 and the A105 are correctly aligned and threaded. Tighten the RF connection finger tight.

29. Make sure the A109 harnesses are correctly and fully inserted into their sockets on the A18 RF Control PCB Assembly.

30. Torque the RF connection between the A109 and the A105 to 8 lbf · in.

Final Checks

31. Check that all cables are correctly routed and firmly seated in their connectors.

32. Check that all semi-rigid coaxial cables are correctly aligned, threaded, and torqued.

Next Steps

33. If no other replacement modules are required, skip ahead to Section 13-40, “RF Deck Bottom Side - Port Group Modules - Completion” on page 13-116 below to complete the replacement.

13-25 Option 051/061/062 - Test Port 2 Modules - Removing

Use

Use this procedure to access one or more modules within the Test Port 2 port module group on instruments equipped with Option 051, 061, or 062.

Note that for the 051/061/062 options, the Test Port 2 port module group is not attached to the A108 HBTS/VITS and it does not need to be removed before servicing this port module group.

The basic procedure is to remove the port group components until the to-be-replaced module is accessed and removed from the instrument. Once removed, exit the procedure, and start the preparation procedure in the section following.

This procedure is for servicing the modules in the Test Port 2 port group on instruments equipped with:

- Option 051 Front Panel Loops
- Option 061 Front Panel Loops and Two Attenuators
- Option 062 Front Panel Loops and Four Attenuators

Identification

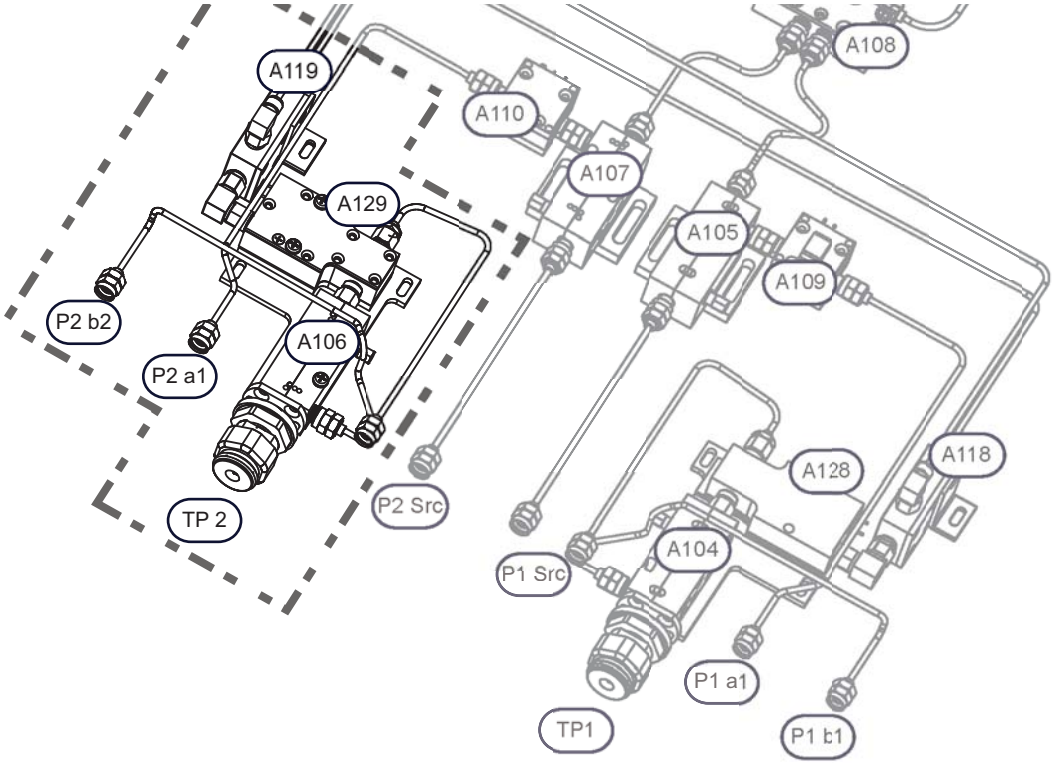

Test Port 2 Port Modules - Option 051, Option 061, and Option 062
- Shown for MS4645A / MS4647A with Option 051, 061, or 062.
- Mechanical configuration is the same for MS4642A / MS4644A.

Test Port 2 Modules
- MS4642A / MS4644A: A119 Low Band Bridge – ND70078 – 64016
- MS4645A / MS4647A: A119 Low Band Bridge – ND70078 – 64016
- MS4642A / MS4644A: A129 Diplexer/Bias Tee Module, Port 2, 40 GHz – ND73941 – 74277
- MS4645A / MS4647A: A129 Diplexer/Bias Tee Module, Port 2, 70 GHz – ND73943 – 74278
- MS4642A / MS4644A: A106 Test Coupler, 40 GHz – No ND – 66480
- MS4645A / MS4647A: A106 Test Coupler, 70 GHz – No ND – 66245
- MS4642A / MS4644A: Test Port Adapter K Connector – No ND – 34YK50C
- MS4645A / MS4647A: Test Port Adapter V Connector – No ND – 34YV50C

Figure 13-20. Identification - Option 051/061/062 - Test Port 2 Modules

Parts and Applicability

Use the procedure to remove and replace the following modules:

- MS4642A / MS4644A: A129 Diplexer/Bias Tee Module, Port 2, 40 GHz – ND73941 – 74277
- MS4645A / MS4647A: A129 Diplexer/Bias Tee Module, Port 2, 70 GHz – ND73943 – 74278
- MS4642A / MS4644A: A106 Test Coupler, 40 GHz – No ND – 66480
- MS4645A / MS4647A: A106 Test Coupler, 70 GHz – No ND – 66245

Procedure

Common Procedures

1. Prepare work area, work surface, and observe safety issues.
   - See Section 7-4 “Common - Prepare Work Area and Safety” on page 7-9.
2. Remove the Outer Cover.
   - See Section 7-5 “Common - Remove Outer Cover” on page 7-10.
3. Remove the Inner Top Cover.
   - See Section 7-6 “Common - Remove Inner Cover” on page 7-13.
4. The Front Panel can stay in place.
   - To remove it, see:
     - Section 10-3 “Remove the Phase 1 Front Panel Assembly” on page 10-3
     - Section 10-4 “Remove the Phase 2 Front Panel Assembly” on page 10-11
5. Position the instrument so that it is upside down, with the RF Deck up.

Locate the Installed Option and Port Group

6. Use above to locate the required port group module.

Note	This and the following procedures use engineering “A” reference numbers or ERNs (e.g. A108) for module identification and to keep the procedure as short as possible. The figure preceding each procedure lists the names and part numbers of each module. Note that each figure lists the modules for both MS4642A / MS4644A VNAs and modules for MS4645A / MS4647A VNAs for the same equipped option.

7. Note that this port module group is not attached to the A108 HBTS/VITS and the A108 does not need to be removed to service the modules in this port group.
   - MS4642A / MS4644A: A108 High Band Transfer Switch, 40 GHz – ND70092 – 66221
   - MS4645A / MS4647A: A108 V Integrated High Band Transfer Switch, 70 GHz – ND70093 – 66619

Disconnect the A119

8. Do not use this procedure to remove the A119. Instead, for removal, preparation, and replacement procedures, see:
   - Section 13-18, “Side-Attached Modules - Standard/All Options - Removing” on page 13-53.
   - Section 13-19, “Side-Attached Modules - Preparing” on page 13-60.
   - Section 13-20, “Side-Attached Modules - Installing” on page 13-61
9. Remove the A119 bracket-to-chassis hardware. The bracket stays attached to the A119.
   - MS4642A / MS4644A: A119 Low Band Bridge – ND70078 – 64016
   - MS4645A / MS4647A: A119 Low Band Bridge – ND70078 – 64016
10. Use a 5/16” torque end wrench set to 8 lbf · in and a plain end wrench to loosen the elbow RF connection between the A119 and the A129. Remove the elbow RF connector from the A129 and leave it on the A119.
    - MS4642A / MS4644A: A129 Diplexer/Bias Tee Module, Port 2, 40 GHz – ND70089 – 66465
    - MS4645A / MS4647A: A129 Diplexer/Bias Tee Module, Port 2, 70 GHz – ND70091 – 64911
11. Gently bend the semi-rigid coaxial cables connected to the A119 so that it is out of the way.

Remove the A129

12. Remove the bracket-to-chassis hardware holding the A129 and the A106 to their shared bracket.
    - MS4642A / MS4644A: A106 Test Coupler, 40 GHz – No ND – 66480

- MS4645A / MS4647A: A106 Test Coupler, 70 GHz – No ND – 66245
- MS4642A / MS4644A: A129 Diplexer/Bias Tee Module, Port 2, 40 GHz – ND73941 – 74277
- MS4645A / MS4647A: A129 Diplexer/Bias Tee Module, Port 2, 70 GHz – ND73943 – 74278

13. Remove the module-to-bracket hardware holding the A129 to the bracket.

14. Remove the module-to-bracket hardware holding the A106 to the bracket.

15. Use a 5/16” torque end wrench set to 8 lbf · in to loosen the RF Connection between the A129 and the A106 and then remove the connection.

16. Remove the A129 from the chassis.

- If the A129 is to be replaced, skip ahead to Section 13-26, “Option 051/061/062 - Test Port 2 Modules - Installing” on page 13-83.
- If the A106 module is to be replaced, continue below.

Remove the Test Port 2

17. Use a 1/2” torque end wrench set to 60 lbf · in to loosen the Test Port Adapter on Test Port 2. Once loose, use finger pressure to carefully remove the Test Port Adapter, taking care not to damage the center pin.

- MS4642A / MS4644A: Test Port Adapter K Connector – No ND – 34YK50C
- MS4645A / MS4647A: Test Port Adapter V Connector – No ND – 34YV50C
- The detailed removal/installation procedure is in Section 8-2, “Replace Front Panel Test Ports” on page 8-2 in Chapter 8.
- See Figure 8-1, “Test Port Connectors and Related Hardware” on page 8-2.

18. Use a 13/16” torque socket wrench set to 15 lbf · ft to loosen the Test Port nut.

- Recommended is a Craftsman 009-44594 or equivalent torque wrench set to 15 lbf · ft with a 13/16” deep socket on a 3/8” drive.

19. When loose, use finder pressure to remove the Test Port Nut and then remove the Test Port Thrust washer.

Remove the A106

20. If not already done so, remove the module-to-bracket hardware holding the A106 to the bracket.

- MS4642A / MS4644A: A106 Test Coupler, 40 GHz – No ND – 66480
- MS4645A / MS4647A: A106 Test Coupler, 70 GHz – No ND – 66245

21. Remove the A106 from the chassis. Remove the mounting bracket from the chassis.

- If the A106 is to be replaced, skip ahead to Section 13-26, “Option 051/061/062 - Test Port 2 Modules - Installing” on page 13-83.

13-26 Option 051/061/062 - Test Port 2 Modules - Installing

Use

Use this procedure to install one or more components of the Test Port 2 port module group in instruments equipped with Option 051, 061, or 062.

Parts and Applicability

- MS4642A / MS4644A: A129 Diplexer/Bias Tee Module, Port 2, 40 GHz – ND73941 – 74277
- MS4645A / MS4647A: A129 Diplexer/Bias Tee Module, Port 2, 70 GHz – ND73943 – 74278
- MS4642A / MS4644A: A106 Test Coupler, 40 GHz – No ND – 66480
- MS4645A / MS4647A: A106 Test Coupler, 70 GHz – No ND – 66245

Identification

See Figure 13-20, “Identification - Option 051/061/062 - Test Port 2 Modules” on page 13-80 above.

Procedure

Starting Point

1. The starting point in this procedure depends on how many modules were removed above in Section 13-21, “Standard No Options - Test Port 2 Modules - Removing” on page 13-62.
2. Skip ahead to the indicated step depending on which module is to be replaced. It is assumed that the to-be-replaced module and its companion modules have already been removed.
3. Identify the module to be replaced and skip ahead to that procedure step:
   - A106 – Skip ahead to Step #4 - Install the A106.
     - MS4642A / MS4644A: A106 Test Coupler, 40 GHz – No ND – 66480
     - MS4645A / MS4647A: A106 Test Coupler, 70 GHz – No ND – 66245
   - A129 – Skip ahead to Step #13 - Install the A129.
     - MS4642A / MS4644A: A129 Diplexer/Bias Tee Module, Port 2, 40 GHz – ND73941 – 74277
     - MS4645A / MS4647A: A129 Diplexer/Bias Tee Module, Port 2, 70 GHz – ND73943 – 74278

Install the A106

4. Install the A106.
   - MS4642A / MS4644A: A106 Test Coupler, 40 GHz – No ND – 66480
   - MS4645A / MS4647A: A106 Test Coupler, 70 GHz – No ND – 66245
5. Place the A106/A129 shared bracket into the chassis. Loosely insert the two bracket-to-chassis screws that hold it in place.
6. Place the A106 into position with its threaded end through the front panel. Loosely insert the two module-to-bracket screws.
7. Tighten the bracket-to-chassis screws.
8. Tighten the module-to-bracket screws.
9. From the front panel, add the test port thrust washer and then the test port nut.
10. Use a 13/16” torque socket wrench set to 15 lbf · ft to tighten the Test Port nut.
    - Recommended is a Craftsman 009-44594 or equivalent torque wrench set to 15 lbf · ft with a 13/16” deep socket on a 3/8” drive.

Install the Test Port 2 Test Port Adapter

11. Install the Test Port Adapter on Test Port 2.

- MS4642A / MS4644A: Test Port Adapter K Connector – No ND – 34YK50C
- MS4645A / MS4647A: Test Port Adapter V Connector – No ND – 34YV50C

12. Carefully align the center pin of the test port connector, and make sure it is correctly threaded. Tighten finger tight and then use a 1/2” torque end wrench to torque to 60 lbf · in.

Install the A129

13. Install the A129.

- MS4642A / MS4644A: A129 Diplexer/Bias Tee Module, Port 2, 40 GHz – ND73941 – 74277
- MS4645A / MS4647A: A129 Diplexer/Bias Tee Module, Port 2, 70 GHz – ND73943 – 74278

14. Place the A129 into position next to the A106. Carefully align their RF connectors and make sure they are correctly threaded. Tighten the connection finger tight.

- MS4642A / MS4644A: A106 Test Coupler, 40 GHz – No ND – 66480
- MS4645A / MS4647A: A106 Test Coupler, 70 GHz – No ND – 66245

15. Insert the two module-to-bracket screws and then tighten.

16. Torque the RF connection between the A106 and the A129 to 8 lbf · in.

Connect the A119

17. Connect the side-attached A119.

- MS4642A / MS4644A: A119 Low Band Bridge – ND70078 – 64016
- MS4645A / MS4647A: A119 Low Band Bridge – ND70078 – 64016

18. Bend the semi-rigid coaxial cables attached to the A119 so that the elbow RF connector between the A119 and the A129 is correctly aligned and the A119 bracket is aligned with its chassis mounting hole.

19. Loosely insert the bracket-to-chassis screws.

20. Make sure both of the RF elbow connectors are correctly aligned, threaded and then tighten finger tight.

Tighten and Torque A119 and A129

21. Tighten the A119 bracket-to-chassis screws.

- MS4642A / MS4644A: A119 Low Band Bridge – ND70078 – 64016
- MS4645A / MS4647A: A119 Low Band Bridge – ND70078 – 64016

22. Tighten the A129 module-to-chassis screws.

- MS4642A / MS4644A: A129 Diplexer/Bias Tee Module, Port 2, 40 GHz – ND73941 – 74277
- MS4645A / MS4647A: A129 Diplexer/Bias Tee Module, Port 2, 70 GHz – ND73943 – 74278

23. Using two end wrenches (a 5/16” plain end wrench and a 5/16” torque end wrench set to 8 lbf · in), torque the two elbow RF connections.

Final Checks

24. Check that all cables are correctly routed and firmly seated in their connectors.

25. Check that all semi-rigid coaxial cables are correctly aligned, threaded, and torqued.

Next Steps

26. If no other replacement modules are required, skip ahead to Section 13-40, “RF Deck Bottom Side - Port Group Modules - Completion” on page 13-116 below to complete the replacement.

13-27 Option 051 - Port 1 Source Modules - Removing

Use

Use this procedure to remove and replace the A105 module in the Port 1 Source (P1 Src) port module group for instruments equipped with Option 051.

Identification

Port 1 Source Modules - Option 051	Port 1 Source Modules
• Shown for MS4645A / MS4647A with Option 051. • Mechanical configuration is the same for MS4642A / MS4644A.	• MS4642A / MS4644A: A108 High Band Transfer Switch, 40 GHz – ND70092 – 66221 • MS4645A / MS4647A: A108 V Integrated High Band Transfer Switch, 70 GHz – ND70093 – 66619 • MS4642A / MS4644A: A105 Reference Coupler, 40 GHz – No ND – 66487 • MS4645A / MS4647A: A105 Reference Coupler, 70 GHz – No ND – 65270 • MS4642A / MS4644A: A109 Port 1 Level Detector, K Connector, 40 GHz – ND72124 – 67417-1 • MS4645A / MS4647A: A109 Port 1 Level Detector, V Connector, 70 GHz – ND72126 – 67389-1

Figure 13-21. Identification - Option 051 - Port 1 Source Modules

Parts and Applicability

Use this procedure to remove and replace the following Port 1 Source modules:

- MS4642A / MS4644A: A105 Reference Coupler, 40 GHz – No ND – 66487
- MS4645A / MS4647A: A105 Reference Coupler, 70 GHz – No ND – 65270

Procedure

Common Procedures

1. Prepare work area, work surface, and observe safety issues.
   - See Section 7-4 “Common - Prepare Work Area and Safety” on page 7-9.
2. Remove the Outer Cover.
   - See Section 7-5 “Common - Remove Outer Cover” on page 7-10.
3. Remove the Inner Top Cover.
   - See Section 7-6 “Common - Remove Inner Cover” on page 7-13.
4. The Front Panel can stay in place.
   - To remove it, see:
     - Section 10-3 “Remove the Phase 1 Front Panel Assembly” on page 10-3
     - Section 10-4 “Remove the Phase 2 Front Panel Assembly” on page 10-11
5. Position the instrument so that it is upside down, with the RF Deck up.

Locate the Installed Option and Port Group

6. Use above to locate the required port group module.

Note	This and the following procedures use engineering “A” reference numbers or ERNs (e.g. A108) for module identification and to keep the procedure as short as possible. The figure preceding each procedure lists the names and part numbers of each module. Note that each figure lists the modules for both MS4642A / MS4644A VNAs and modules for MS4645A / MS4647A VNAs for the same equipped option.

7. Note that this port module group is attached to the A108 HBTS/VITS and the A108 must be removed before servicing the modules in this port group.
   - MS4642A / MS4644A: A108 High Band Transfer Switch, 40 GHz – ND70092 – 66221
   - MS4645A / MS4647A: A108 V Integrated High Band Transfer Switch, 70 GHz – ND70093 – 66619

Remove the A108 HBTS/VITS

8. Remove the A108 HBTS/VITS, following the procedure steps in Section 12-9 “Remove A108 HBTS/VITS Module – ND70092 or ND70093” on page 12-16 above in Chapter 12.

Disconnect the A109

9. Do not use this procedure to remove or replace the A109. Instead use the following procedures to remove, prepare, and replace the A109:
   - Section 13-18, “Side-Attached Modules - Standard/All Options - Removing” on page 13-53.
   - Section 13-19, “Side-Attached Modules - Preparing” on page 13-60.
   - Section 13-20, “Side-Attached Modules - Installing” on page 13-61.
10. Use a 5/16” torque end wrench set to 8 lbf · in to loosen and then remove the RF connection between the A105 and the A109.
    - MS4642A / MS4644A: A105 Reference Coupler, 40 GHz – No ND – 66487
    - MS4645A / MS4647A: A105 Reference Coupler, 70 GHz – No ND – 65270
    - MS4642A / MS4644A: A109 Port 1 Level Detector, 40 GHz, K Connector – ND72124 – 67417-1
    - MS4645A / MS4647A: A109 Port 1 Level Detector, 70 GHz, V Connector – ND72126 – 67389-1
11. Bend the A109 and its attached semi-rigid coaxial cables slightly out of the way.

Remove the A105

12. The semi-rigid coaxial cable between the A105 and the A108 should already be removed as should the A108 HBTS/VITS module.
13. Loosen the A105 bracket-to-chassis mounting hardware.
14. Loosen and then remove the semi-rigid coaxial cable between the A105 and the front panel Port 1 Source port.
    - MS4642A / MS4644A: A105 Reference Coupler, 40 GHz – No ND – 66487
    - MS4645A / MS4647A: A105 Reference Coupler, 70 GHz – No ND – 65270
15. Remove the A105 bracket-to-chassis hardware. Remove the module-to-bracket hardware.
16. Remove the A105 and its bracket from the chassis.
    - If the A105 is to be replaced, skip ahead to Section 13-33, “Option 051/061 - Port 2 Source Modules - Installing” on page 13-101

13-28 Option 051 - Port 1 Source Modules - Installing

Use

Use this procedure to replace the following Port 1 Source modules:

- MS4642A / MS4644A: A105 Reference Coupler, 40 GHz – No ND – 66487
- MS4645A / MS4647A: A105 Reference Coupler, 70 GHz – No ND – 65270

Identification

See Figure 13-21, “Identification - Option 051 - Port 1 Source Modules” on page 13-86 above.

Procedure

Install the A105

1. Place the A105 mounting bracket in the chassis.
2. Loosely insert the bracket-to-chassis mounting screws. Do not tighten.
3. Place the A105 module in the chassis and connect the semi-rigid coaxial cable between the module and the front panel Port 1 Source port.
4. Carefully align and thread the RF connectors between the coaxial cable and the A105 module. Do not tighten.
5. Torque the RF cable connection to the front panel to 8 lbf · in.
6. Insert and thread the module-to-bracket mounting hardware.
7. Tighten the module-to-bracket mounting hardware.
8. Do not yet tighten the bracket-to-chassis mounting hardware.

Install the A108

9. Install the A108 HBTS/VITS back into its socket on the A18 PCB by carefully following the procedure in Section 12-11, “Install A108 HBTS/VITS – ND70092 or ND70093” on page 12-20 above.
   - MS4642A / MS4644A: A108 High Band Transfer Switch, 40 GHz – ND70092 – 66221
   - MS4645A / MS4647A: A108 V Integrated High Band Transfer Switch, 70 GHz – ND70093 – 66619
   - All Instruments: A18 RF Control PCB Assembly – ND70068 – 61929-3.
10. Check that the A108 HBTS/VITS module-to-PCB mounting hardware is tight.
11. Check that all RF connections between the A108 HBTS/VITS and the A105 and A108 are correctly torqued.
12. Check that the bracket-to-chassis and module-to-bracket mounting hardware for the A107 is tight.
    - MS4642A / MS4644A: A107 Reference Coupler, 40 GHz – No ND – 66487
    - MS4645A / MS4647A: A107 Reference Coupler, 70 GHz – No ND – 65270

Connect the A109

13. Bend the semi-rigid coaxial cables connected to the A109 back into place until the RF connectors between the A109 and the A105 are lined up.
    - MS4642A / MS4644A: A105 Reference Coupler, 40 GHz – No ND – 66487
    - MS4645A / MS4647A: A105 Reference Coupler, 70 GHz – No ND – 65270
    - MS4642A / MS4644A: A109 Port 1 Level Detector, 40 GHz, K Connector – ND72124 – 67417-1
    - MS4645A / MS4647A: A109 Port 1 Level Detector, 70 GHz, V Connector – ND72126 – 67389-1
14. Correctly align and thread RF connection between the two modules.
15. When correctly threaded, tighten using finger pressure and then torque the connection to 8 lbf · in.

16. Tighten the A105 module-to-bracket mounting hardware.

17. Tighten the bracket-to-chassis mounting hardware.

Final Checks

18. Check that all cables are correctly routed and firmly seated in their connectors.

19. Check that all semi-rigid coaxial cables are correctly aligned, threaded, and torqued.

Next Steps

20. If no other replacement modules are required, skip ahead to Section 13-40, “RF Deck Bottom Side - Port Group Modules - Completion” on page 13-116 below to complete the replacement.

13-29 Option 051/061/062 - Test Port 1 Modules - Removing

Use

Use this procedure to service the modules in the Test Port 1 port group on instruments equipped with:

- Option 051 Front Panel Loops
- Option 061 Front Panel Loops and Two Attenuators
- Option 062 Front Panel Loops and Four Attenuators

Note that for instruments with Option 051, 061, and 062, the Test Port 2 port module group is not attached to the A108 HBTS/VITS. The A108 does not need to be removed.

- MS4642A / MS4644A: A108 High Band Transfer Switch, 40 GHz – ND70092 – 66221
- MS4645A / MS4647A: A108 V Integrated High Band Transfer Switch, 70 GHz – ND70093 – 66619

The basic procedure is to remove the port group components until the to-be-replaced module is accessed and removed from the instrument. Once removed, exit the procedure, and start the preparation procedure in the section following.

Identification

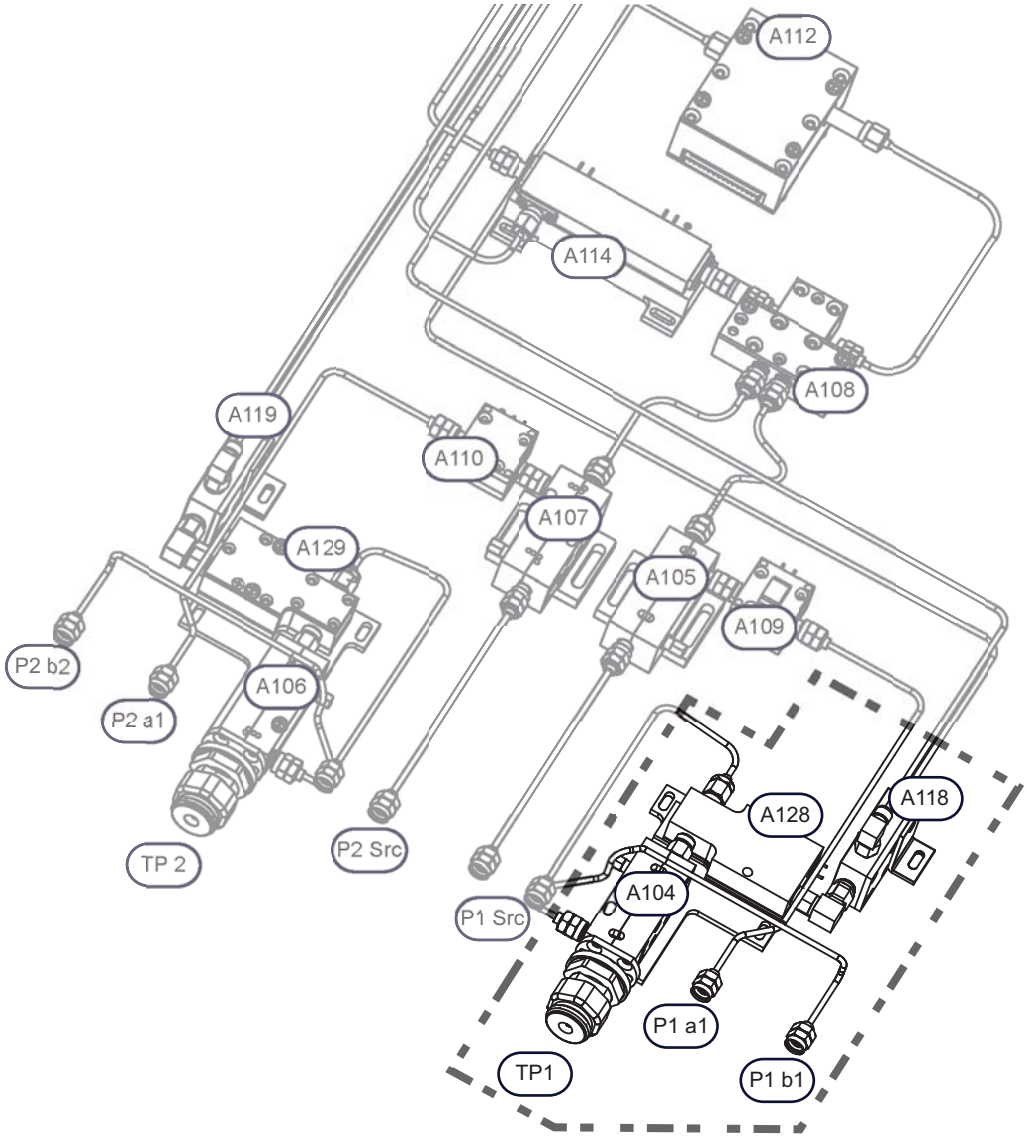

Test Port 1 Modules - Option 051, 061, 062

- Shown for MS4645A / MS4647A with Option 051
- Mechanical configuration for this port module group is the same for Option 061 and 062, and is also the same for MS4642A / MS4644A.

Test Port 1 Modules

- MS4642A / MS4644A: A108 High Band Transfer Switch, 40 GHz – ND70092 – 66221
- MS4645A / MS4647A: A108 V Integrated High Band Transfer Switch, 70 GHz – ND70093 – 66619
- MS4642A / MS4644A: A105 Reference Coupler, 40 GHz – No ND – 66487
- MS4645A / MS4647A: A105 Reference Coupler, 70 GHz – No ND – 65270
- MS4642A / MS4644A: A109 Port 1 Level Detector, 40 GHz, K Connector – ND72124 – 67417-1
- MS4645A / MS4647A: A109 – A109 Port 1 Level Detector, V Connector, 70 GHz – ND72126 – 67389-1

Figure 13-22. Identification - Option 051/061/062 - Test Port 1 Modules

Procedure

Common Procedures

1. Prepare work area, work surface, and observe safety issues.
   - See Section 7-4 “Common - Prepare Work Area and Safety” on page 7-9.
2. Remove the Outer Cover.
   - See Section 7-5 “Common - Remove Outer Cover” on page 7-10.
3. Remove the Inner Top Cover.
   - See Section 7-6 “Common - Remove Inner Cover” on page 7-13.
4. The Front Panel can stay in place.
   - To remove it, see:
     - Section 10-3 “Remove the Phase 1 Front Panel Assembly” on page 10-3
     - Section 10-4 “Remove the Phase 2 Front Panel Assembly” on page 10-11
5. Position the instrument so that it is upside down, with the RF Deck up.

Locate the Installed Option and Port Group

6. Use Figure 13-22, “Identification - Option 051/061/062 - Test Port 1 Modules” on page 13-92 above to locate the required port group module.

Note	This and the following procedures use engineering “A” reference numbers or ERNs (e.g. A108) for module identification and to keep the procedure as short as possible. The figure preceding each procedure lists the names and part numbers of each module. Note that each figure lists the modules for both MS4642A / MS4644A VNAs and modules for MS4645A / MS4647A VNAs for the same equipped option.

7. Note that this port module group is not attached to the A108 HBTS/VITS and the A108 does not need to be removed to service the modules in this port group.
   - MS4642A / MS4644A: A108 High Band Transfer Switch, 40 GHz – ND70092 – 66221
   - MS4645A / MS4647A: A108 V Integrated High Band Transfer Switch, 70 GHz – ND70093 – 66619

Disconnect the A118

8. Remove the A118 bracket-to-chassis hardware. The bracket stays attached to the A118.
   - MS4642A / MS4644A: A118 Low Band Bridge – ND70078 – 64016
   - MS4645A / MS4647A: A118 Low Band Bridge – ND70078 – 64016
9. Use a 5/16” torque end wrench set to 8 lbf · in and a plain end wrench to loosen the elbow RF connection between the A118 and the A128. Remove the elbow RF connector from the A128 and leave it on the A118.
   - MS4642A / MS4644A: A128 Diplexer/Bias Tee Module, Port 1, 40 GHz – ND73940 – 74277
   - MS4645A / MS4647A: A128 Diplexer/Bias Tee Module, Port 1, 70 GHz – ND73942 – 74278
10. Gently bend the semi-rigid coaxial cables connected to the A118 so that it is out of the way. Do not use this procedure to replace the A118. For removal, preparation, and replacement procedures for the A118, see:
    - Section 13-18, “Side-Attached Modules - Standard/All Options - Removing” on page 13-53.
    - Section 13-19, “Side-Attached Modules - Preparing” on page 13-60.
    - Section 13-20, “Side-Attached Modules - Installing” on page 13-61.

Remove the A128

11. Remove the bracket-to-chassis hardware holding the A128 and the A104 to their shared bracket.

- MS4642A / MS4644A: A128 Diplexer/Bias Tee Module, Port 1, 40 GHz – ND73940 – 74277
- MS4645A / MS4647A: A128 Diplexer/Bias Tee Module, Port 1, 70 GHz – ND73942 – 74278
- MS4642A / MS4644A: A104 Test Coupler, 40 GHz – No ND – 66480
- MS4645A / MS4647A: A104 Test Coupler, 70 GHz – No ND – 66245

12. Remove the module-to-bracket hardware holding the A128 to the bracket.

13. Remove the module-to-bracket hardware holding the A104 to the bracket.

14. Use a 5/16” torque end wrench set to 8 lbf · in to loosen the RF Connection between the A128 and the A104 and then remove the connection.

15. Remove the A128 from the chassis.

- If the A128 is to be replaced, skip ahead to Section 13-30, “Option 051/061/062 - Test Port 1 Modules - Installing” on page 13-95.
- If the A104 module is to be replaced, continue below.

Remove the Test Port 1 Test Port Adapter

16. Use a 1/2” torque end wrench set to 60 lbf · in to loosen the Test Port Adapter on Test Port 1.

- MS4642A / MS4644A: Test Port Adapter K Connector – No ND – 34YK50C
- MS4645A / MS4647A: Test Port Adapter V Connector – No ND – 34YV50C
- The detailed removal/installation procedure is in Section 8-2, “Replace Front Panel Test Ports” on page 8-2 in Chapter 8.
- See Figure 8-1, “Test Port Connectors and Related Hardware” on page 8-2.

17. Once loose, use finger pressure to carefully remove and then remove the adapter. Take care removing the adapter to protect the center pin.

Remove Test Port Nut

18. Use a 13/16” torque socket wrench set to 15 lbf · ft to loosen the Test Port nut.

- Recommended is a Craftsman 009-44594 or equivalent torque wrench set to 15 lbf · ft with a 13/16” deep socket on a 3/8” drive.

19. When loose, use finger pressure to remove the Test Port Nut and then remove the Test Port Thrust washer.

Remove the A104

20. If not already done so, remove the module-to-bracket hardware holding the A104 to the bracket.

- MS4642A / MS4644A: A104 Test Coupler, 40 GHz – No ND – 66480
- MS4645A / MS4647A: A104 Test Coupler, 70 GHz – No ND – 66245

21. Remove the A104 from the chassis. Remove the mounting bracket from the chassis.

- If the A104 is to be replaced, skip ahead to Section 13-30, “Option 051/061/062 - Test Port 1 Modules - Installing” on page 13-95.

13-30 Option 051/061/062 - Test Port 1 Modules - Installing

Use this procedure to install one or more components of the Test Port 1 port module group in instruments equipped with Option 051, 061, or 062.

Identification

See Figure 13-22, “Identification - Option 051/061/062 - Test Port 1 Modules” on page 13-92 above.

Parts and Applicability

- MS4642A / MS4644A:
  - A104 Test Coupler, 40 GHz – No ND – 66480
  - A128 Diplexer/Bias Tee Module, Port 1, 40 GHz – ND73940 – 74277
- MS4645A / MS4647A:
  - A104 Test Coupler, 70 GHz – No ND – 66245
  - A128 Diplexer/Bias Tee Module, Port 1, 70 GHz – ND73942 – 74278

Procedure

Starting Point

1. The starting point in this procedure depends on how many modules were removed above in Section 13-29, “Option 051/061/062 - Test Port 1 Modules - Removing” on page 13-91.
2. Skip ahead to the indicated step depending on which module is to be replaced. It is assumed that the to-be-replaced module and its companion modules have already been removed.
3. Identify the module to be replaced and skip ahead to that procedure step:
   - A104 – Skip ahead to Step #4 - Install the A104.
     - MS4642A / MS4644A: A106 Test Coupler, 40 GHz – No ND – 66480
     - MS4645A / MS4647A: A106 Test Coupler, 70 GHz – No ND – 66245
   - A128 – Skip ahead to Step #12 - Install the A128.
     - MS4642A / MS4644A: A128 Diplexer/Bias Tee Module, Port 1, 40 GHz – ND73940 – 74277
     - MS4645A / MS4647A: A128 Diplexer/Bias Tee Module, Port 1, 70 GHz – ND73942 – 74278

Install the A104

4. Install the A104.
   - MS4642A / MS4644A: A104 Test Coupler, 40 GHz – No ND – 66480
   - MS4645A / MS4647A: A104 Test Coupler, 70 GHz – No ND – 66245
5. Place the A104/A128 shared bracket into the chassis. Loosely insert the two bracket-to-chassis screws that hold it in place.
6. Place the A104 into position with its threaded end through the front panel. Loosely insert the two module-to-bracket screws.
7. Tighten the bracket-to-chassis screws.
8. Tighten the module-to-bracket screws.
9. From the front panel, add the test port thrust washer and then the test port nut. Use a 13/16” torque socket wrench set to 15 lbf · ft to tighten the Test Port Nut.
   - Recommended is a Craftsman 009-44594 or equivalent torque wrench set to 15 lbf · ft with a 13/16” deep socket on a 3/8” drive.

Install the Test Port 1 Test Port Adapter

10. Install the Test Port Adapter on Test Port 1. Carefully place it into position, making sure the center pin is correctly aligned. Use finger pressure to tighten.

- MS4642A / MS4644A: Test Port Adapter K Connector – No ND – 34YK50C
- MS4645A / MS4647A: Test Port Adapter V Connector – No ND – 34YV50C

11. Use a 1/2” torque end wrench to torque to 60 lbf · in.

Install the A128

12. Install the A128.

- MS4642A / MS4644A: A128 Diplexer/Bias Tee Module, Port 1, 40 GHz – ND73940 – 74277
- MS4645A / MS4647A: A128 Diplexer/Bias Tee Module, Port 1, 70 GHz – ND73942 – 74278

13. Place the A128 into position next to the A104. Carefully align their RF connectors and make sure they are correctly threaded. Tighten the connection finger tight.

- MS4642A / MS4644A: A104 Test Coupler, 40 GHz – No ND – 66480
- MS4645A / MS4647A: A104 Test Coupler, 70 GHz – No ND – 66245

14. Insert the two module-to-bracket screws and then tighten.

15. Torque the RF connection between the A104 and the A128 to 8 lbf · in.

Connect the A118

16. Connect the side-attached A118.

- MS4642A / MS4644A: A118 Low Band Bridge – ND70078 – 64016
- MS4645A / MS4647A: A118 Low Band Bridge – ND70078 – 64016

17. Bend the semi-rigid coaxial cables attached to the A118 so that the elbow RF connector between the A118 and the A128 is correctly aligned and the A118 bracket is aligned with its chassis mounting hole.

18. Loosely insert the bracket-to-chassis screws.

19. Make sure both of the RF elbow connectors are correctly aligned, threaded and then tighten finger tight.

Tighten and Torque A118 and A128

20. Tighten the A118 bracket-to-chassis screws.

- MS4642A / MS4644A: A118 Low Band Bridge – ND70078 – 64016
- MS4645A / MS4647A: A118 Low Band Bridge – ND70078 – 64016

21. Tighten the A128 module-to-chassis screws.

- MS4642A / MS4644A: A128 Diplexer/Bias Tee Module, Port 1, 40 GHz – ND73940 – 74277
- MS4645A / MS4647A: A128 Diplexer/Bias Tee Module, Port 1, 70 GHz – ND73942 – 74278

22. Using two end wrenches (a 5/16” plain end wrench and a 5/16” torque end wrench set to 8 lbf · in), torque the two elbow RF connections.

Final Checks

23. Check that all cables are correctly routed and firmly seated in their connectors.

24. Check that all semi-rigid coaxial cables are correctly aligned, threaded, and torqued.

Next Steps

25. If no other replacement modules are required, skip ahead to Section 13-40, “RF Deck Bottom Side - Port Group Modules - Completion” on page 13-116 below to complete the replacement.

13-31 Option 051/061 - Port 2 Source Modules - Removing

Use

Use this procedure to service the modules in the Port 2 Source (P2 Src) port group on instruments equipped with:

- Option 051 Front Panel Loops
- Option 061 Front Panel Loops and Two Attenuators

Use this procedure to access one or more modules within the Port 2 Source port module group.

Note that the Port 2 Source module group is attached to the A108 HBTS/VITS and the A108 switch must be carefully removed before the port group can be disassembled. The basic procedure is to remove the A108 switch and then disassemble the port group module-by-module until the to-be-replaced module is removed

- MS4642A / MS4644A: A108 High Band Transfer Switch, 40 GHz – ND70092 – 66221
- MS4645A / MS4647A: A108 V Integrated High Band Transfer Switch, 70 GHz – ND70093 – 66619

The basic procedure is to remove the port group components until the to-be-replaced module is accessed and removed from the instrument. Once removed, exit the procedure, and start the preparation procedure in the section following.

Identification

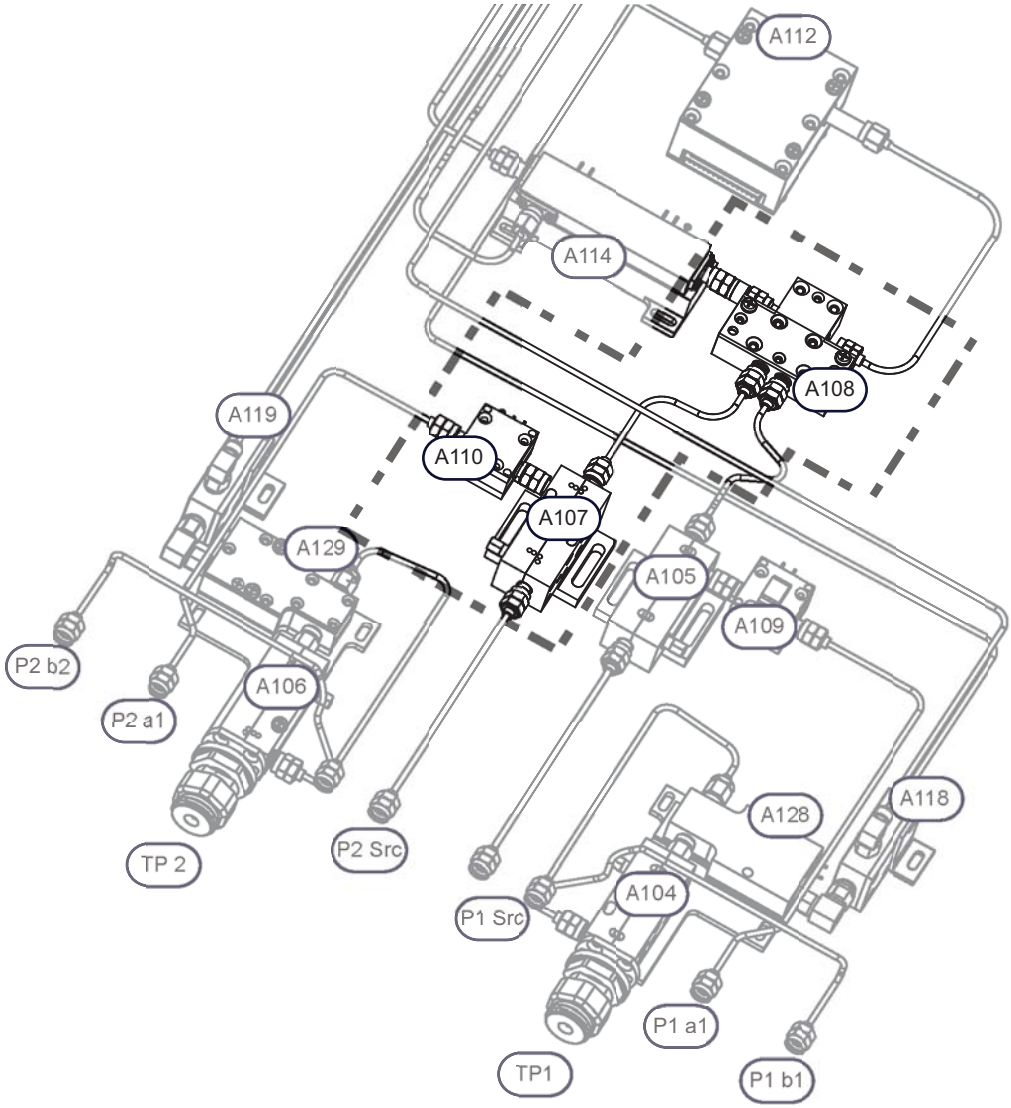

Port 2 Source Modules - Option 051, 061, 062

- Shown for MS4645A / MS4647A with Option 051
- Mechanical configuration for this port module group is the same for Option 061 and 062, and is also the same for MS4642A / MS4644A.

Port 2 Source Modules

- A108 High Band Transfer Switch:
  - MS4642A / MS4644A: A108 High Band Transfer Switch, 40 GHz – ND70092 – 66221
  - MS4645A / MS4647A: A108 V Integrated High Band Transfer Switch, 70 GHz – ND70093 – 66619
- A107 Reference Coupler:
  - MS4642A / MS4644A: A107 Reference Coupler, 40 GHz – No ND – 66487
  - MS4645A / MS4647A: A107 Reference Coupler, 70 GHz – No ND – 65270
- A110 Port 2 Level Detector:
  - MS4642A / MS4644A: A110 – Port 2 Level Detector, 40 GHz, K Connector – ND72125 – 67417-2
  - MS4645A / MS4647A: A110 – Port 2 Level Detector, V Connector, 70 GHz – ND72127 – 67389-2

Figure 13-23. Identification - Option 051/061 - Port 2 Source Modules

Parts and Applicability

- MS4642A / MS4644A: A107 Reference Coupler, 40 GHz – No ND – 66487
- MS4645A / MS4647A: A107 Reference Coupler, 70 GHz – No ND – 65270
- For instruments equipped with Option 051 or 061.

Procedure

Common Procedures

1. Prepare work area, work surface, and observe safety issues.

- See Section 7-4 “Common - Prepare Work Area and Safety” on page 7-9.

2. Remove the Outer Cover.

- See Section 7-5 “Common - Remove Outer Cover” on page 7-10.

3. Remove the Inner Top Cover.

- See Section 7-6 “Common - Remove Inner Cover” on page 7-13.

4. The Front Panel can stay in place.

- To remove it, see:
  - Section 10-3 “Remove the Phase 1 Front Panel Assembly” on page 10-3
  - Section 10-4 “Remove the Phase 2 Front Panel Assembly” on page 10-11

5. Position the instrument so that it is upside down, with the RF Deck up.

Locate the Installed Option and Port Group

6. Use above to locate the required port group modules.

Note	This and the following procedures use engineering “A” reference numbers or ERNs (e.g. A108) for module identification and to keep the procedure as short as possible. The figure preceding each procedure lists the names and part numbers of each module. Note that each figure lists the modules for both MS4642A / MS4644A VNAs and modules for MS4645A / MS4647A VNAs for the same equipped option.

Remove the A108 HBTS/VITS

7. Remove the A108 HBTS/VITS, following the procedure steps in Section 12-9 “Remove A108 HBTS/VITS Module – ND70092 or ND70093” on page 12-16 above in Chapter 12.
   - MS4642A / MS4644A: A108 High Band Transfer Switch, 40 GHz – ND70092 – 66221
   - MS4645A / MS4647A: A108 V Integrated High Band Transfer Switch, 70 GHz – ND70093 – 66619

Disconnect the A110

8. Do not use this procedure to remove or replace the A110. Instead use the following procedures to remove, prepare, and replace the A110:
   - Section 13-18, “Side-Attached Modules - Standard/All Options - Removing” on page 13-53.
   - Section 13-19, “Side-Attached Modules - Preparing” on page 13-60.
   - Section 13-20, “Side-Attached Modules - Installing” on page 13-61.
9. Use a 5/16” torque end wrench set to 8 lbf · in to loosen and then remove the RF connection between the A107 and the A110.
   - MS4642A / MS4644A: A107 Reference Coupler, 40 GHz – No ND – 66487
   - MS4645A / MS4647A: A107 Reference Coupler, 70 GHz – No ND – 65270
   - MS4642A / MS4644A: A110 – Port 2 Level Detector, 40 GHz, K Connector – ND72125 – 67417-2
   - MS4645A / MS4647A: A110 – Port 2 Level Detector, V Connector, 70 GHz – ND72127 – 67389-2
10. Bend the A110 and its attached semi-rigid coaxial cables slightly out of the way.

Remove the A107

11. The semi-rigid coaxial cable between the A107 and the A108 should already be removed.
12. Loosen the bracket-to-chassis mounting hardware.
13. Loosen and then remove the semi-rigid coaxial cable between the A107 and the front panel Port 2 Source port.
    - MS4642A / MS4644A: A107 Reference Coupler, 40 GHz – No ND – 66487
    - MS4645A / MS4647A: A107 Reference Coupler, 70 GHz – No ND – 65270
14. Remove the bracket-to-chassis hardware. Remove the module-to-bracket hardware.
15. Remove the A107 and its bracket from the chassis.
    - If the A107 is to be replaced, skip ahead to Section 13-33, “Option 051/061 - Port 2 Source Modules - Installing” on page 13-101.

13-32 Option 051/061 - Port 2 Source Modules - Preparing

There are no required preparation procedures for the Option 051/061 Port 2 Source Modules.

13-33 Option 051/061 - Port 2 Source Modules - Installing

Use this procedure to install modules in the Port 2 Source (P2 Src) port group on instruments equipped with:

- Option 051 Front Panel Loops
- Option 061 Front Panel Loops and Two Attenuators

Use this procedure to access one or more modules within the Port 2 Source port module group.

Note that the Port 2 Source module group is attached to the A108 HBTS/VITS and the A108 switch must be carefully removed before the port group can be disassembled. The basic procedure is to remove the A108 switch and then disassemble the port group module-by-module until the to-be-replaced module is removed

- MS4642A / MS4644A: A108 High Band Transfer Switch, 40 GHz – ND70092 – 66221
- MS4645A / MS4647A: A108 V Integrated High Band Transfer Switch, 70 GHz – ND70093 – 66619

The basic procedure is to remove the port group components until the to-be-replaced module is accessed and removed from the instrument. Once removed, exit the procedure, and start the preparation procedure in the section following.

Identification

See Figure 13-23, “Identification - Option 051/061 - Port 2 Source Modules” on page 13-98 above.

Parts and Applicability

- MS4642A / MS4644A: A107 Reference Coupler, 40 GHz – No ND – 66487
- MS4645A / MS4647A: A107 Reference Coupler, 70 GHz – No ND – 65270
- For instruments equipped with Option 051 or Option 061.

Procedure

Insert the A107

1. Place the A107 bracket in the chassis over its mounting holes.
2. Insert the bracket-to-chassis mounting hardware. Do not tighten.
3. Place the A107 on top of the bracket with the side port facing to the left.
   - MS4642A / MS4644A: A107 Reference Coupler, 40 GHz – No ND – 66487
   - MS4645A / MS4647A: A107 Reference Coupler, 70 GHz – No ND – 65270
4. Insert the module-to-bracket hardware. Do not tighten.

Connect the A107

5. Align and then thread the semi-rigid coaxial cable from the front panel to the A107 port.
6. Tighten the module-to-bracket hardware.
7. Tighten the bracket-to-chassis hardware.
8. Torque the semi-rigid coaxial cable connectors to 8 lbf · in.

Attach the A110

9. Bend the A110 and its attached semi-rigid coaxial cables back into place.
   - MS4642A / MS4644A: A110 – Port 2 Level Detector, 40 GHz, K Connector – ND72125 – 67417-2
   - MS4645A / MS4647A: A110 – Port 2 Level Detector, V Connector, 70 GHz – ND72127 – 67389-2
10. Align the RF connections between the A110 and the A107 and then thread.
11. Use finger pressure to tighten the RF connection and then use a 5/16” torque end wrench set to 8 lbf · in to torque the RF connection between the A107 and the A110.

Install the A108

12. Install the A108 HBTS/VITS back into its socket on the A18 PCB by carefully following the procedure in Section 12-11, “Install A108 HBTS/VITS – ND70092 or ND70093” on page 12-20 above.
    - MS4642A / MS4644A: A108 High Band Transfer Switch, 40 GHz – ND70092 – 66221
    - MS4645A / MS4647A: A108 V Integrated High Band Transfer Switch, 70 GHz – ND70093 – 66619

.Final Checks

13. Check that all cables are correctly routed and firmly seated in their connectors.
14. Check that all semi-rigid coaxial cables are correctly aligned, threaded, and torqued.

Next Steps

15. If no other replacement modules are required, skip ahead to Section 13-40, “RF Deck Bottom Side - Port Group Modules - Completion” on page 13-116 below to complete the replacement.

13-34 Option 061/062 - Port 1 Source Modules - Removing

Use

For instruments equipped with Option 061 (Front Panel Loops and Two Attenuators) or with Option 062 (Front Panel Loops and Four Attenuators), use this procedure to service the modules in the Port 1 Source module group.

Identification

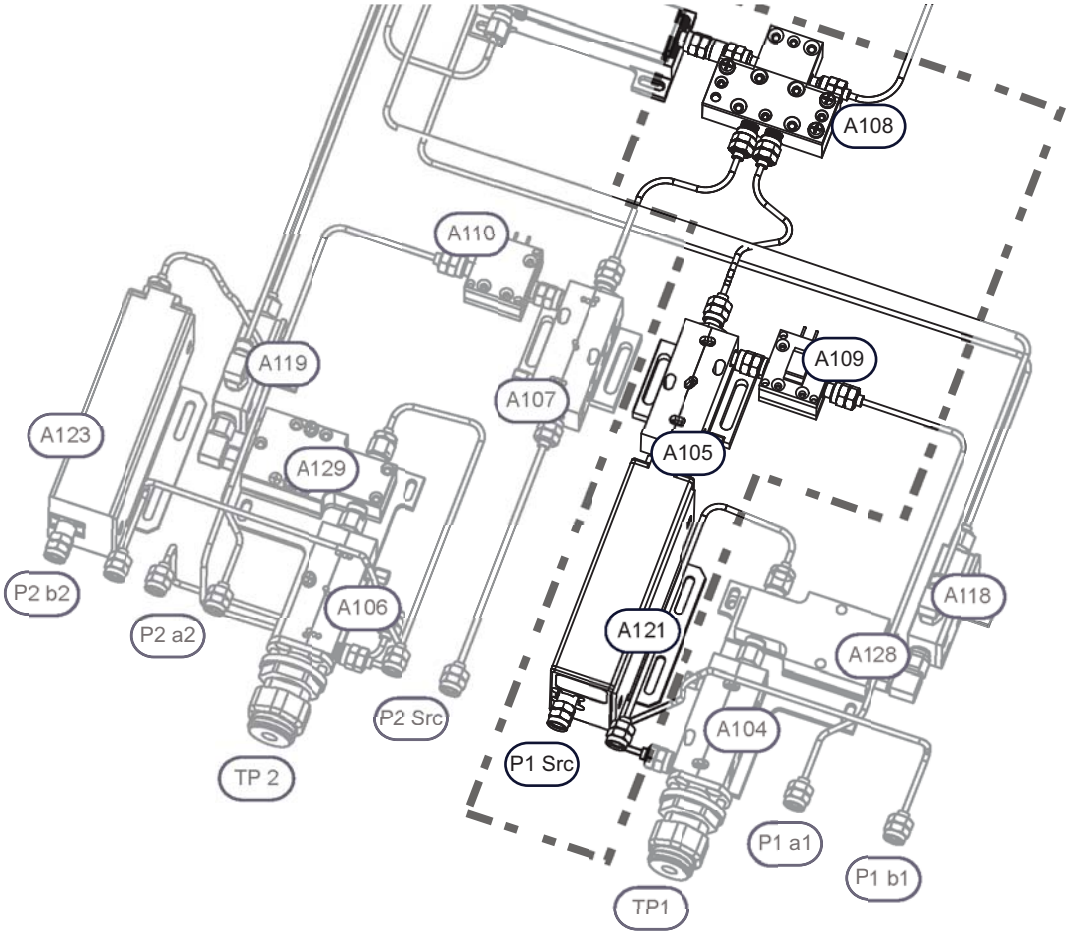

Port 1 Source Modules - Option 061, 062

- Shown for MS4645A / MS4647A with Option 061
- Mechanical configuration for this port module group is the same for Option 062, and is also the same for MS4642A / MS4644A.

Port 1 Source Modules

- MS4642A / MS4644A: A108 High Band Transfer Switch, 40 GHz – ND70092 – 66221
- MS4645A / MS4647A: A108 V Integrated High Band Transfer Switch, 70 GHz – ND70093 – 66619
- MS4642A / MS4644A: A105 Reference Coupler, 40 GHz – No ND – 66487
- MS4645A / MS4647A: A105 Reference Coupler, 70 GHz – No ND – 65270
- MS4642A / MS4644A: A109 Port 1 Level Detector, 40 GHz, K Connector – ND72124 – 67417-1
- MS4645A / MS4647A: A109 Port 1 Level Detector, V Connector, 70 GHz – ND72126 – 67389-1
- MS4642A / MS4644A: A121 High Band Step Attenuator, Port 1 Source, 40 GHz – No ND – 66052
- MS4645A / MS4647A: A121 High Band Step Attenuator, Port 1 Source, 70 GHz – No ND – 66050

Figure 13-24. Identification - Option 061 - Port 1 Source Modules

Parts and Applicability

- MS4642A / MS4644A: A105 Reference Coupler, 40 GHz – No ND – 66487
- MS4645A / MS4647A: A105 Reference Coupler, 70 GHz – No ND – 65270
- MS4642A / MS4644A: A109 Port 1 Level Detector, 40 GHz, K Connector – ND72124 – 67417-1
- MS4645A / MS4647A: A109 Port 1 Level Detector, V Connector, 70 GHz – ND72126 – 67389-1
- MS4642A / MS4644A: A121 High Band Step Attenuator, Port 1 Source, 40 GHz – No ND – 66052
- MS4645A / MS4647A: A121 High Band Step Attenuator, Port 1 Source, 70 GHz – No ND – 66050
- For instruments equipped with Option 061 or Option 062.

Procedure

Common Procedures

1. Prepare work area, work surface, and observe safety issues.
   - See Section 7-4 “Common - Prepare Work Area and Safety” on page 7-9.
2. Remove the Outer Cover.
   - See Section 7-5 “Common - Remove Outer Cover” on page 7-10.
3. Remove the Inner Top Cover.
   - See Section 7-6 “Common - Remove Inner Cover” on page 7-13.
4. The Front Panel can stay in place.
   - To remove it, see:
     - Section 10-3 “Remove the Phase 1 Front Panel Assembly” on page 10-3
     - Section 10-4 “Remove the Phase 2 Front Panel Assembly” on page 10-11
5. Position the instrument so that it is upside down, with the RF Deck up.

Locate the Installed Option and Port Group

6. Use Figure 13-24, “Identification - Option 061 - Port 1 Source Modules” on page 13-103 above to locate the required port group modules.

Note	This and the following procedures use engineering “A” reference numbers or ERNs (e.g. A108) for module identification and to keep the procedure as short as possible. The figure preceding each procedure lists the names and part numbers of each module. Note that each figure lists the modules for both MS4642A / MS4644A VNAs and modules for MS4645A / MS4647A VNAs for the same equipped option.

Remove the A108 HBTS/VITS

7. Remove the A108 HBTS/VITS, following the procedure steps in Section 12-9 “Remove A108 HBTS/VITS Module – ND70092 or ND70093” on page 12-16 above in Chapter 12.
   - MS4642A / MS4644A: A108 High Band Transfer Switch, 40 GHz – ND70092 – 66221
   - MS4645A / MS4647A: A108 V Integrated High Band Transfer Switch, 70 GHz – ND70093 – 66619

Disconnect the A109

8. Do not use this procedure to remove or replace the A109. Instead use the following procedures:
   - Section 13-18, “Side-Attached Modules - Standard/All Options - Removing” on page 13-53.
   - Section 13-19, “Side-Attached Modules - Preparing” on page 13-60.
   - Section 13-20, “Side-Attached Modules - Installing” on page 13-61.
9. Use a 5/16” torque end wrench set to 8 lbf · in to loosen and then remove the RF connection between the A105 and the A109.

- MS4642A / MS4644A: A105 Reference Coupler, 40 GHz – No ND – 66487
- MS4645A / MS4647A: A105 Reference Coupler, 70 GHz – No ND – 65270
- MS4642A / MS4644A: A109 Port 1 Level Detector, 40 GHz, K Connector – ND72124 – 67417-1
- MS4645A / MS4647A: A109 – A109 Port 1 Level Detector, V Connector, 70 GHz – ND72126 – 67389-1

10. Bend the A109 and its attached semi-rigid coaxial cables slightly out of the way.

Remove the A105

11. Use a 5/16” torque end wrench set to 8 lbf · in to loosen the RF connection between the A105 and the A121. Do not remove.

- MS4642A / MS4644A: A105 Reference Coupler, 40 GHz – No ND – 66487
- MS4645A / MS4647A: A105 Reference Coupler, 70 GHz – No ND – 65270
- MS4642A / MS4644A: A121 High Band Step Attenuator, Port 1 Source, 40 GHz – No ND – 66052
- MS4645A / MS4647A: A121 High Band Step Attenuator, Port 1 Source, 70 GHz – No ND – 66050

12. Loosen and remove the A105 bracket-to-chassis mounting hardware.

13. Loosen and remove the A105 module -to-bracket mounting hardware.

14. Disconnect the RF connection between the A105 and the A121.

15. Remove the A105 module from the chassis.

Next Steps

16. The next step depends on the removal objective:

- If only the A105 is to be replaced, skip ahead to Section 13-35, “Option 061/062 - Port 1 Source Modules - Preparing” on page 13-106.
- If the A121 module is to be replaced, remove the A105 bracket from the chassis and continue below.

Remove the A121

17. Disconnect the A121 ribbon cable from the A18 PCB J1 connector. For the moment, the ribbon cable can stay attached to the attenuator.

- MS4642A / MS4644A: A121 High Band Step Attenuator, Port 1 Source, 40 GHz – No ND – 66052
- MS4645A / MS4647A: A121 High Band Step Attenuator, Port 1 Source, 70 GHz – No ND – 66050
- All Instruments: A18 RF Control PCB Assembly – ND70068 – 61929-3

18. Loosen and remove the two (2) M3 × 0.5 mm kep nuts holding the A121 bracket to the chassis.

19. Using two 5/16” end wrenches (a plain and a torque wrench set to 8 lbf · in), loosen the RF connection between the A121 and the front panel.

20. When loose, use finger pressure to remove the RF connection and carefully remove the A121 from the chassis.

Prepare the Replacement Modules

21. Skip ahead to Section 13-35, “Option 061/062 - Port 1 Source Modules - Preparing” on page 13-106 to prepare the modules.

13-35 Option 061/062 - Port 1 Source Modules - Preparing

Use this procedure to prepare the A105 or A121 modules in the Option 061 Port 1 Source module group.

Preparing the A105

The only preparation required is to remove any protective covers from the A105 ports.

- MS4642A / MS4644A: A105 Reference Coupler, 40 GHz – No ND – 66487
- MS4645A / MS4647A: A105 Reference Coupler, 70 GHz – No ND – 65270

Preparing the A121

The bracket assembly and ribbon cable must be transferred from the to-be-replaced A121 attenuator to the new part.

- MS4642A / MS4644A: A121 High Band Step Attenuator, Port 1 Source, 40 GHz – No ND – 66052
- MS4645A / MS4647A: A121 High Band Step Attenuator, Port 1 Source, 70 GHz – No ND – 66050

When removing the bracket, note that it mounts on the right side of the attenuator. For detailed preparation instructions, see Section 13-16, “Option 061/062 - Attenuators - Preparing” on page 13-47 above.

Preparations Complete

When all required preparations are complete, skip ahead to Section 13-36, “Option 061/062 - Port 1 Source Modules - Installing” on page 13-107

13-36 Option 061/062 - Port 1 Source Modules - Installing

Use this procedure to install replacement modules in the Port 1 Source (P1 Src) port module group.

Identification

See Figure 13-24, “Identification - Option 061 - Port 1 Source Modules” on page 13-103 above.

Parts and Applicability

- MS4642A / MS4644A: A105 Reference Coupler, 40 GHz – No ND – 66487
- MS4642A / MS4644A: A105 Reference Coupler, 70 GHz – No ND – 65270
- MS4642A / MS4644A: A109 Port 1 Level Detector, 40 GHz, K Connector – ND72124 – 67417-1
- MS4645A / MS4647A: A109 Port 1 Level Detector, V Connector, 70 GHz – ND72126 – 67389-1
- MS4642A / MS4644A: A121 High Band Step Attenuator, Port 1 Source, 40 GHz – No ND – 66052
- MS4645A / MS4647A: A121 High Band Step Attenuator, Port 1 Source, 70 GHz – No ND – 66050

Procedure

Starting Point

1. The starting point in this procedure depends on how many modules were removed in Section 13-36, “Option 061/062 - Port 1 Source Modules - Installing” on page 13-107 above.
2. Skip ahead to the indicated step depending on which module is to be replaced. It is assumed that the to-be-replaced module and its companion modules have already been removed.
3. Identify the module to be replaced and skip ahead to that procedure step:
   - A121 – Skip ahead to Step #4 - Install the A121.
     - MS4642A / MS4644A: A121 High Band Step Attenuator, Port 1 Source, 40 GHz – No ND – 66052
     - MS4645A / MS4647A: A121 High Band Step Attenuator, Port 1 Source, 70 GHz – No ND – 66050
   - A105 – Skip ahead to Step #11 - Install the A105.
     - MS4642A / MS4644A: A105 Reference Coupler, 40 GHz – No ND – 66487
     - MS4645A / MS4647A: A105 Reference Coupler, 70 GHz – No ND – 65270

Install the A112

4. Install the A121.
   - MS4642A / MS4644A: A121 High Band Step Attenuator, Port 1 Source, 40 GHz – No ND – 66052
   - MS4645A / MS4647A: A121 High Band Step Attenuator, Port 1 Source, 70 GHz – No ND – 66050
5. The High Band Step Attenuator should be installed in its bracket, with the mounting screws tight and the bracket on the right side of the attenuator when viewed from the front.
6. Place the attenuator bracket assembly into the chassis over its two threaded mounting studs.
7. Loosely attach the two (2) M3 × 0.5 mm kep nuts. Do not tighten.
8. Correctly align and thread the RF connector between the attenuator J2 front connector and the front panel connector.
9. When correctly threaded, tighten finger tight.
10. Torque the connection to 8 lbf · in.

Install the A105

11. Install the A105.

- MS4642A / MS4644A: A105 Reference Coupler, 40 GHz – No ND – 66487
- MS4645A / MS4647A: A105 Reference Coupler, 70 GHz – No ND – 65270

12. Place the A105 bracket in the chassis.

13. Loosely install the bracket-to-chassis hardware. Do not tighten.

14. Place the A105 over the bracket and correctly align and thread the RF connection between the A105 and the A121.

15. When correctly threaded, tighten finger tight.

16. Torque the connection to 8 lbf · in.

17. Install the module-to-bracket mounting hardware. When correctly threaded, tighten.

18. Tighten the bracket-to-chassis hardware.

Connect the A109

19. Bend the A109 and its attached semi-rigid coaxial cables back into place.

- MS4642A / MS4644A: A105 Reference Coupler, 40 GHz – No ND – 66487
- MS4645A / MS4647A: A105 Reference Coupler, 70 GHz – No ND – 65270
- MS4642A / MS4644A: A109 Port 1 Level Detector, 40 GHz, K Connector – ND72124 – 67417-1
- MS4645A / MS4647A: A109 Port 1 Level Detector, V Connector, 70 GHz – ND72126 – 67389-1

20. Correctly align and thread the RF connection between the A109 and the A105. Tighten finger tight.

21. Torque the connection to 8 lbf · in.

Install the A108

22. Install the A108 HBTS/VITS back into its socket on the A18 PCB by carefully following the procedure in Section 12-11, “Install A108 HBTS/VITS – ND70092 or ND70093” on page 12-20 above.

- MS4642A / MS4644A: A108 High Band Transfer Switch, 40 GHz – ND70092 – 66221
- MS4645A / MS4647A: A108 V Integrated High Band Transfer Switch, 70 GHz – ND70093 – 66619
- All Instruments: A18 RF Control PCB Assembly – ND70068 – 61929-3

Next Steps

23. If no other replacement modules are required, skip ahead to Section 13-40, “RF Deck Bottom Side - Port Group Modules - Completion” on page 13-116 below to complete the replacement.

13-37 Option 062 - Port 2 Source Modules - Removing

Use

For instruments equipped with Option 062 (Front Panel Loops and Four Attenuators), use this procedure to service the modules in the Port 2 Source module group. The other ports are serviced in other procedures.

Identification

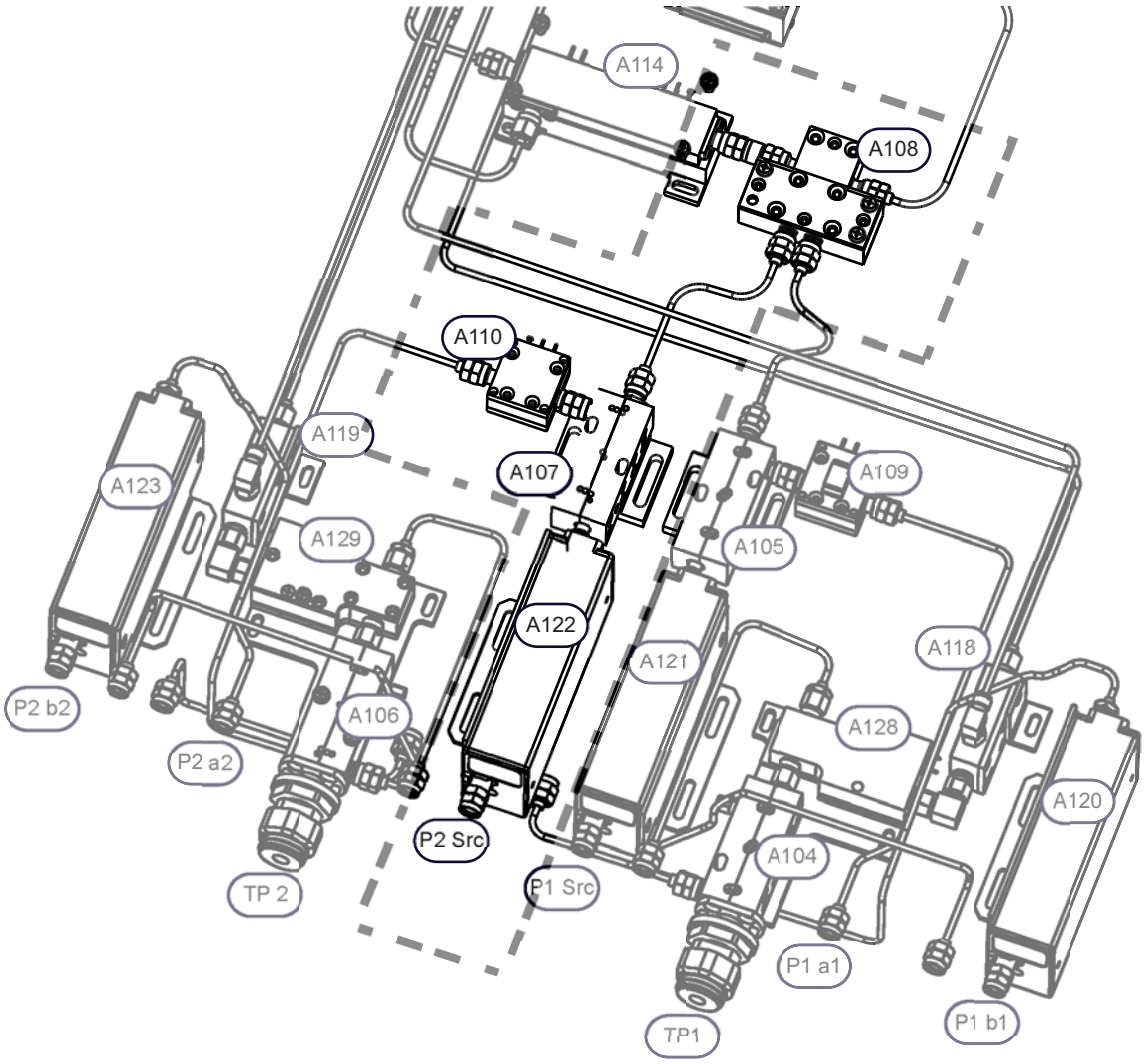

Figure 13-25. Identification - Option 062 - Port 2 Source Modules

Port 2 Source Modules - Option 062
- Shown for MS4645A / MS4647A with Option 062
- Mechanical configuration for this port module group is the same for MS4642A / MS4644A with Option 062.

Port 2 Source Modules
- MS4642A / MS4644A: A108 High Band Transfer Switch, 40 GHz – ND70092 – 66221
- MS4645A / MS4647A: A108 V Integrated High Band Transfer Switch, 70 GHz – ND70093 – 66619
- MS4642A / MS4644A: A107 Reference Coupler, 40 GHz – No ND – 66487
- MS4645A / MS4647A: A107 Reference Coupler, 70 GHz – No ND – 65270
- MS4642A / MS4644A: A110 Port 2 Level Detector, 40 GHz, K Connector – ND72125 – 67417-2
- MS4645A / MS4647A: A110 Port 2 Level Detector, V Connector, 70 GHz – ND72127 – 67389-2
- MS4642A / MS4644A: A122 High Band Step Attenuator, Port 2 Source, 40 GHz – No ND – 66052
- MS4645A / MS4647A: A122 High Band Step Attenuator, Port 2 Source, 70 GHz – No ND – 66050

Figure 13-25. Identification - Option 062 - Port 2 Source Modules

Parts and Applicability

- MS4642A / MS4644A: A108 High Band Transfer Switch, 40 GHz – ND70092 – 66221
- MS4645A / MS4647A: A108 V Integrated High Band Transfer Switch, 70 GHz – ND70093 – 66619
- MS4642A / MS4644A: A107 Reference Coupler, 40 GHz – No ND – 66487
- MS4645A / MS4647A: A107 Reference Coupler, 70 GHz – No ND – 65270
- MS4642A / MS4644A: A110 Port 2 Level Detector, 40 GHz, K Connector – ND72125 – 67417-2
- MS4645A / MS4647A: A110 Port 2 Level Detector, V Connector, 70 GHz – ND72127 – 67389-2
- MS4642A / MS4644A: A122 High Band Step Attenuator, Port 2 Source, 40 GHz – No ND – 66052
- MS4645A / MS4647A: A122 High Band Step Attenuator, Port 2 Source, 70 GHz – No ND – 66050
- For instruments equipped with Option 062.

Procedure

Common Procedures

1. Prepare work area, work surface, and observe safety issues.
   - See Section 7-4 “Common - Prepare Work Area and Safety” on page 7-9.
2. Remove the Outer Cover.
   - See Section 7-5 “Common - Remove Outer Cover” on page 7-10.
3. Remove the Inner Top Cover.
   - See Section 7-6 “Common - Remove Inner Cover” on page 7-13.
4. The Front Panel can stay in place.
   - To remove it, see:
     - Section 10-3 “Remove the Phase 1 Front Panel Assembly” on page 10-3
     - Section 10-4 “Remove the Phase 2 Front Panel Assembly” on page 10-11
5. Position the instrument so that it is upside down, with the RF Deck up.

Locate the Installed Option and Port Group

6. Use Figure 13-25, "Identification - Option 062 - Port 2 Source Modules" on page 13-109 above to locate the required port group modules.

Note	This and the following procedures use engineering "A" reference numbers or ERNs (e.g. A108) for module identification and to keep the procedure as short as possible. The figure preceding each procedure lists the names and part numbers of each module. Note that each figure lists the modules for both MS4642A / MS4644A VNAs and modules for MS4645A / MS4647A VNAs for the same equipped option.

Remove the A108 HBTS/VITS

7. Remove the A108 HBTS/VITS, following the procedure steps in Section 12-9 "Remove A108 HBTS/VITS Module – ND70092 or ND70093" on page 12-16 above in Chapter 12.
   - MS4642A / MS4644A: A108 High Band Transfer Switch, 40 GHz – ND70092 – 66221
   - MS4645A / MS4647A: A108 V Integrated High Band Transfer Switch, 70 GHz – ND70093 – 66619

Disconnect the A110

8. Do not use this procedure to remove or replace the A110. Instead use the following procedures to remove, prepare, and replace the A110:
   - Section 13-18, "Side-Attached Modules - Standard/All Options - Removing" on page 13-53.
   - Section 13-19, "Side-Attached Modules - Preparing" on page 13-60.
   - Section 13-20, "Side-Attached Modules - Installing" on page 13-61.
9. Use a 5/16" torque end wrench set to 8 lbf · in to loosen and then remove the RF connection between the A107 and the A110.
   - MS4642A / MS4644A: A107 Reference Coupler, 40 GHz – No ND – 66487
   - MS4645A / MS4647A: A107 Reference Coupler, 70 GHz – No ND – 65270
   - MS4642A / MS4644A: A110 Port 2 Level Detector, K Connector, 40 GHz – ND72125 – 67417-2
   - MS4645A / MS4647A: A110 Port 2 Level Detector, V Connector, 70 GHz – ND72127 – 67389-2
10. Bend the A110 and its attached semi-rigid coaxial cables slightly out of the way.

Remove the A107

11. Use a 5/16" torque end wrench set to 8 lbf · in to loosen the RF connection between the A107 and the A122. Do not remove.
    - MS4642A / MS4644A: A107 Reference Coupler, 40 GHz – No ND – 66487
    - MS4645A / MS4647A: A107 Reference Coupler, 70 GHz – No ND – 65270
    - MS4642A / MS4644A: A122 High Band Step Attenuator, Port 2 Source, 40 GHz – No ND – 66052
    - MS4645A / MS4647A: A122 High Band Step Attenuator, Port 2 Source, 70 GHz – No ND – 66050
12. Loosen and remove the A107 bracket-to-chassis mounting hardware.
13. Loosen and remove the A107 module-to-bracket mounting hardware.
14. Disconnect the RF connection between the A105 and the A122.
15. Remove the A105 module from the chassis.

Next Steps

16. The next step depends on the removal objective:

- If only the A107 is to be replaced, skip ahead to Section 13-38, “Option 062 - Port 2 Source Modules - Preparing” on page 13-113.
- If the A122 module is to be replaced, remove the A107 bracket from the chassis and continue below.

Remove the A122

17. Disconnect the A122 ribbon cable from the A18 PCB J3 connector. For the moment, the ribbon cable can stay attached to the attenuator.

- MS4642A / MS4644A: A122 High Band Step Attenuator, Port 2 Source, 40 GHz – No ND – 66052
- MS4645A / MS4647A: A122 High Band Step Attenuator, Port 2 Source, 70 GHz – No ND – 66050
- All Instruments: A18 RF Control PCB Assembly – ND70068 – 61929-3

18. Loosen and remove the two (2) M3 × 0.5 mm kep nuts holding the A122 bracket to the chassis.

19. Using two 5/16” end wrenches (a plain and a torque wrench set to 8 lbf · in), loosen the RF connection between the A122 and the front panel.

20. When loose, use finger pressure to remove the RF connection and carefully remove the A122 attenuator/bracket assembly from the chassis.

Prepare the Replacement Modules

21. Skip ahead to Section 13-38, “Option 062 - Port 2 Source Modules - Preparing” on page 13-113 to prepare the modules.

13-38 Option 062 - Port 2 Source Modules - Preparing

Use

Use this procedure to prepare the A107 or A122 modules in the Option 062 Port 2 Source module group.

Preparing the A107

The only preparation required is to remove any protective covers from the A107 ports.

- MS4642A / MS4644A: A107 Reference Coupler, 40 GHz – No ND – 66487
- MS4645A / MS4647A: A107 Reference Coupler, 70 GHz – No ND – 65270

Preparing the A122

The bracket assembly and ribbon cable must be transferred from the to-be-replaced A122 attenuator to the new part.

- MS4642A / MS4644A: A122 High Band Step Attenuator, Port 2 Source, 40 GHz – No ND – 66052
- MS4645A / MS4647A: A122 High Band Step Attenuator, Port 2 Source, 70 GHz – No ND – 66050

When removing the bracket, note that it mounts on the left side of the attenuator. For detailed preparation instructions, see Section 13-16, “Option 061/062 - Attenuators - Preparing” on page 13-47 above.

Preparations Complete

When all required preparations are complete, skip ahead to Section 13-39, “Option 062 - Port 2 Source Modules - Installing” on page 13-114.

13-39 Option 062 - Port 2 Source Modules - Installing

For instruments equipped with Option 062 (Front Panel Loops and Four Attenuators), use this procedure to install replacement modules in the Port 2 Source (P2 Src) port module group.

Identification

SeeFigure 13-25, “Identification - Option 062 - Port 2 Source Modules” on page 13-109 above.

Parts and Applicability

Use this procedure to install the following Port 2 Source modules for instruments equipped with Option 062.

- MS4642A / MS4644A: A107 Reference Coupler, 40 GHz – No ND – 66487
- MS4645A / MS4647A: A107 Reference Coupler, 70 GHz – No ND – 65270
- MS4642A / MS4644A: A110 Port 2 Level Detector, K Connector, 40 GHz – ND72125 – 67417-2
- MS4645A / MS4647A: A110 Port 2 Level Detector, V Connector, 70 GHz – ND72127 – 67389-2
- MS4642A / MS4644A: A122 High Band Step Attenuator, Port 2 Source, 40 GHz – No ND – 66052
- MS4645A / MS4647A: A122 High Band Step Attenuator, Port 2 Source, 70 GHz – No ND – 66050

Procedure

Starting Point

1. The starting point in this procedure depends on how many modules were removed in Section 13-37, “Option 062 - Port 2 Source Modules - Removing” on page 13-109 above.
2. Skip ahead to the indicated step depending on which module is to be replaced. It is assumed that the to-be-replaced module and its companion modules have already been removed.
3. Identify the module to be replaced and skip ahead to that procedure step:
   - A122 – Skip ahead to Step #4 - Install the A122.
     - MS4642A / MS4644A: A122 High Band Step Attenuator, Port 2 Source, 40 GHz – No ND – 66052
     - MS4645A / MS4647A: A122 High Band Step Attenuator, Port 2 Source, 70 GHz – No ND – 66050
   - A107 – Skip ahead to Step #11 - Install the A107.
     - MS4642A / MS4644A: A107 Reference Coupler, 40 GHz – No ND – 66487
     - MS4645A / MS4647A: A107 Reference Coupler, 70 GHz – No ND – 65270

Install the A122

4. Install the A122.
   - MS4642A / MS4644A: A122 High Band Step Attenuator, Port 1 Source, 40 GHz – No ND – 66052
   - MS4645A / MS4647A: A122 High Band Step Attenuator, Port 1 Source, 70 GHz – No ND – 66050
5. The High Band Step Attenuator should already be installed in its bracket, with the mounting screws tight and the bracket on the left side of the attenuator when viewed from the front.
6. Place the attenuator/bracket assembly into the chassis over the its two threaded mounting studs.
7. Loosely attach the two (2) M3 × 0.5 mm kep nuts. Do not tighten.
8. Correctly align and thread the RF connector between the attenuator J2 front connector and the front panel connector.
9. When correctly threaded, tighten finger tight.
10. Torque the connection to 8 lbf · in.

Install the A107

11. Install the A107.

- MS4642A / MS4644A: A107 Reference Coupler, 40 GHz – No ND – 66487
- MS4645A / MS4647A: A107 Reference Coupler, 70 GHz – No ND – 65270

12. Place the A107 bracket in the chassis.

13. Loosely install the bracket-to-chassis hardware. Do not tighten.

14. Place the A107 over the bracket and correctly align and thread the RF connection between the A107 and the A122.

15. When correctly threaded, tighten finger tight.

16. Torque the connection to 8 lbf · in.

17. Install the module-to-bracket mounting hardware. When correctly threaded, tighten.

18. Tighten the bracket-to-chassis hardware.

Connect the A110

19. Bend the A110 and its attached semi-rigid coaxial cables back into place.

- MS4642A / MS4644A: A110 Port 2 Level Detector, K Connector, 40 GHz – ND72125 – 67417-2
- MS4645A / MS4647A: A110 Port 2 Level Detector, V Connector, 70 GHz – ND72127 – 67389-2

20. Correctly align and thread the RF connection between the A110 and the A107. Tighten finger tight.

- MS4642A / MS4644A: A107 Reference Coupler, 40 GHz – No ND – 66487
- MS4645A / MS4647A: A107 Reference Coupler, 70 GHz – No ND – 65270

21. Torque the RF connection to 8 lbf · in.

Install the A108

22. Install the A108 HBTS/VITS back into its socket on the A18 PCB by carefully following the procedure in Section 12-11, “Install A108 HBTS/VITS – ND70092 or ND70093” on page 12-20 above.

- MS4642A / MS4644A: A108 High Band Transfer Switch, 40 GHz – ND70092 – 66221
- MS4645A / MS4647A: A108 V Integrated High Band Transfer Switch, 70 GHz – ND70093 – 66619
- All Instruments: A18 RF Control PCB Assembly – ND70068 – 61929-3

Next Steps

23. If no other replacement modules are required, skip ahead to Section 13-40, “RF Deck Bottom Side - Port Group Modules - Completion” on page 13-116 below to complete the replacement.

13-40 RF Deck Bottom Side - Port Group Modules - Completion

Use

Use this procedure to complete the port module replacement and installation used in the procedures above.

Procedure

Signal/Power Cables

1. Check that all signal/power cable connections are correctly positioned and fully seated in their connectors.
2. Where required, add cable ties to keep the signal/power cables in their required location and out of chassis fasteners and fans.

Coaxial Cables

3. Make sure that all semi-rigid coaxial cables are correctly routed, aligned, threaded, and torqued.
4. Where required, add cable ties to keep the semi-rigid coaxial cables in their required position.

Intra-Module RF Connections

5. Make sure that all RF connections between modules are correctly aligned, threaded, and torqued.

Fastening Hardware

6. Check the tightness for all bracket-to-chassis mounting hardware.
7. Check the tightness for all module-to-bracket mounting hardware.

Install the Front Panel

8. Position the instrument right side up.
9. If removed, install the Front Panel Assembly.

Install Covers

10. Install the Inner Cover.
    - See Section 7-7 “Common - Install Inner Cover” on page 7-15.
11. Install the Outer Cover.
    - See Section 7-8 “Common - Install Outer Cover” on page 7-16.
12. Tighten the four handle screws.

Final Tests

13. Perform any final tests as required.

Chapter 14 — RF Deck Removal and Installation

14-1 Introduction

The RF Deck itself is not a replaceable component. This procedure describes how to remove the RF Deck from the instrument chassis in order to service RF Deck Top Side components or to access deeper dwelling assemblies. The chapter concludes with RF Deck installation into the chassis.

RF Deck Top Side Modules

The RF Deck must be removed to service the RF Deck Top Side modules which are inaccessible while the RF Deck is in the instrument chassis. Servicing these modules is covered in Chapter 15, "RF Deck Top Side Modules" in the following sections:

- Section 15-3 "Replace the A113 5-20 GHz Doubler Module" on page 15-5.
- Section 15-4 "Replace the A115 Low Band Transfer Switch Module" on page 15-9.
- Section 15-5 "Replace the A116/A117 Low Band Bridge Module" on page 15-12.
- Section 15-8 "SLODM Overview" on page 15-26.
  - Section 15-10 "Remove the Sampler/LO Distribution Module Assembly" on page 15-41.
  - Section 15-17 "Install the SLODM onto the RF Deck" on page 15-66.
- Section 15-6 "RF Deck Attenuator Overview" on page 15-16.
  - Section 15-7 "Replace the Low Band Source Attenuator" on page 15-18.

Accessing Other Components and Assemblies

The RF Deck must be removed to provide access for servicing the following components. Each set of components is covered in separate chapters:

- **Power Supply Module** – The RF Deck must be removed to replace the Power Supply Module Assembly, consisting of the module, mounting bracket, and three harnesses. The procedure is covered in Chapter 17, "Power Supply Module" in these sections:
  - Section 17-3 "Remove the Power Supply Module" on page 17-12
  - Section 17-4 "Prepare the Replacement Power Supply Module" on page 17-16
  - Section 17-5 "Install the Power Supply Module" on page 17-17
- **Digital PCB Fan Assembly** – The RF Deck must be removed to replace the cooling fan in the Digital PCB Fan Assembly. The assembly consists of multiple brackets and mounting hardware that must be removed in sequence. The procedure is described in Chapter 18, "Digital PCB Fan Assembly" in these sections:
  - Section 18-2 "Remove the Digital PCB Fan Bracket/Card Guide Assembly" on page 18-2
  - Section 18-3 "Prepare the Replacement Digital PCB Fan Assembly" on page 18-18
  - Section 18-4 "Install the Digital Fan Bracket Card Guide Assembly" on page 18-23
- **Motherboard PCB Assemblies** – The RF Deck must be removed to gain access to the Motherboard 2 PCB Assembly and the Motherboard 1 PCB Assembly. Removing the Motherboard PCBs described in Chapter 19, "MB1 and MB2 PCB Replacement Procedures" in the following sections:
  - Section 19-4 "Remove the Motherboard 2 PCB Assembly" on page 19-12
  - Section 19-6 "Install the Motherboard 2 PCB Assembly" on page 19-14
  - Section 19-8 "Remove the MB1 PCB Assembly – ND70069 – 61920-3" on page 19-18

- Section 19-10 “Install the Motherboard 1 PCB Assembly” on page 19-20

14-2 Typical RF Deck Assembly – RF Deck Top Side

The exact components on the RF Deck Top Side vary depending on the Phase, instrument serial number, model, and equipped options. A typical Phase 1 RF Deck equipped with Option 061 Front Panel Loops and Two Attenuators is shown in Figure 14-1.

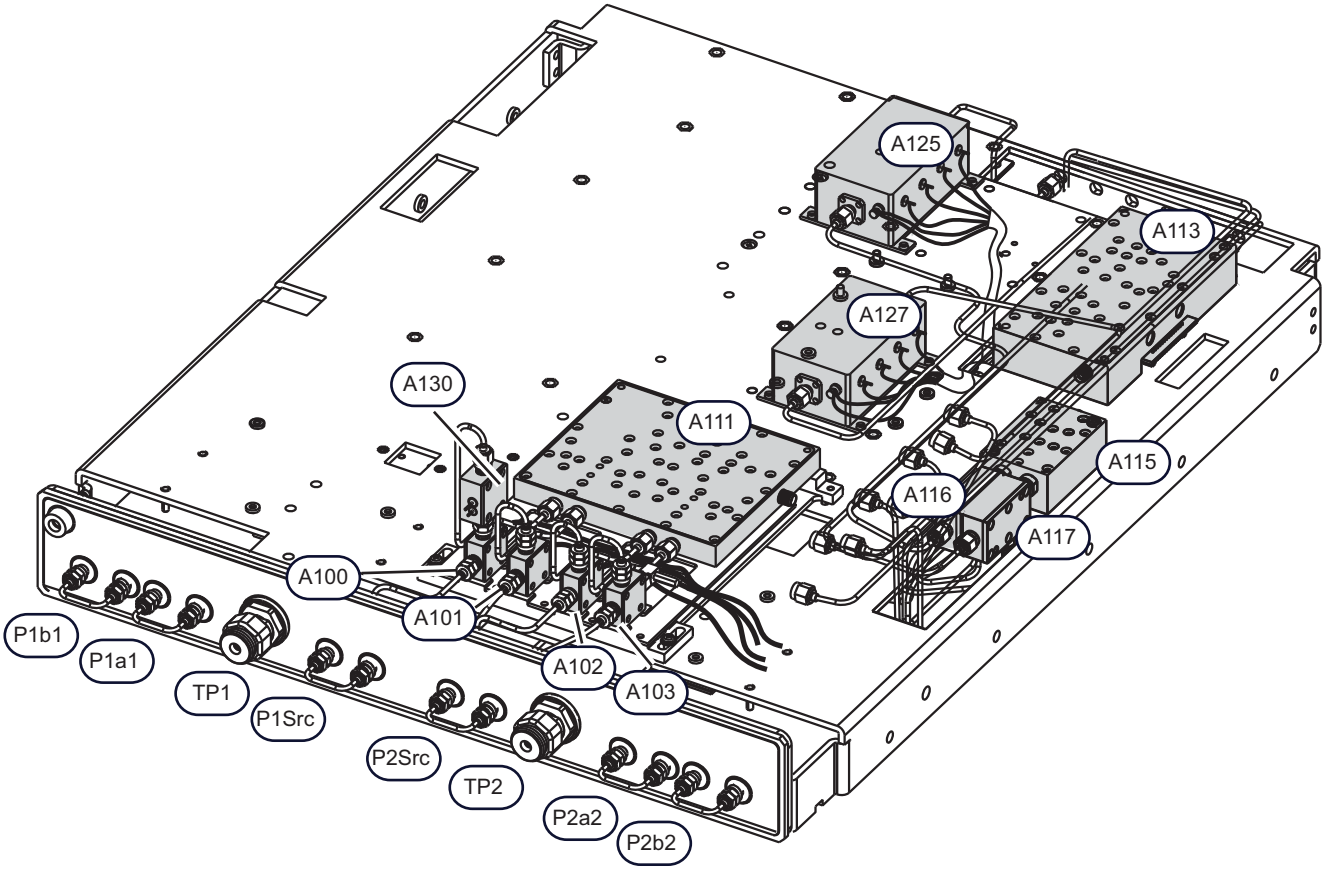

Figure 14-1. Typical RF Deck Removed - Option 061 Loops & Two Attenuators Shown (1 of 2)

Removed RF Deck Assembly equipped with Option 061 – Front Panel Loops & Two Attenuators.

The deck must be removed to service the modules below.

Low Band Attenuators

- A125 Low Band Port 1 Source (P1 Src) Attenuator – ND70084 – 3-2000-1502
- A127 Low Band Port 2 Test (P2 b2) Attenuator – ND70087 – 3-2000-1502

Right Side Modules

- A113 5-20 GHz Doubler Module – ND70080 – 64920
- A115 Low Band Transfer Switch – ND70079 – 64690
- A116 Low Band Bridge Module – ND70078 – 64016 – Inner Module
- A117 Low Band Bridge Module – ND70078 – 64016 – Outer Module

RSampler/LO Distribution Module Assembly

The Sampler/LO Distribution Module (SLODM) Assembly consists of multiple components that vary depending on the instrument serial number and equipped options. Typical components for a Phase 1 VNA are:

- A111 LO Distribution Module Assembly – ND70081 – 62084
- A100 Sampler Module – ND70082 – 64180 – The A100, A101, A102, and A103 mount in A111 sockets.
- A101 Sampler Module – ND70082 – 64180
- A102 Sampler Module – ND70082 – 64180
- A103 Sampler Module – ND70082 – 64180
- A130 LO Coupler Module – ND70083 – 68848 – Not present on all SLODM assemblies. If present, mounts on top of the A100 or A101 Sampler Module.

Front Panel Ports

- P1 b1, P1 a1, TP1, and P1 Src – Front Panel test ports for Port 1.
- P2 Src, TP2, P2 a2, and P2 b2 – Front Panel test ports for Port 2.

Figure 14-1. Typical RF Deck Removed - Option 061 Loops & Two Attenuators Shown (2 of 2)

14-3 Remove the RF Deck

Use this procedure to remove the RF Deck. The deck itself is not a replaceable part.

Applicability and Recommended Fixture

- This procedure is for all models with any combination of options.
- The specifics for some model number and/or option combinations are noted as required in the procedure.

Recommended Fixture

- T3545 – RF Deck Fixture
- See Section B-2 “T3545 RF Deck Fixture” on page B-1 for specifications.

Procedure

Common Procedures

1. Prepare work area, work surface, and observe safety issues.
   - See Section 7-4 “Common - Prepare Work Area and Safety” on page 7-9.
2. Remove Outer Cover.
   - See Section 7-5 “Common - Remove Outer Cover” on page 7-10.
3. Position the instrument so that it is right-side up, RF deck down.
4. Remove Inner Top Cover.
   - See Section 7-6 “Common - Remove Inner Cover” on page 7-13.
5. Position the instrument so that it is upside down, with the bottom of the RF Deck facing up.

Remove Front Panel

6. Make sure that Front Panel has its handles or rack mount ears installed.
7. Place a block under the front of the instrument.
8. Remove the Front Panel.
   - To remove it, see:
     - Section 10-3 “Remove the Phase 1 Front Panel Assembly” on page 10-3
     - Section 10-4 “Remove the Phase 2 Front Panel Assembly” on page 10-11

Remove RF Deck Front Loops

9. If equipped with Option 051, 061, or 062, do not lift the RF Deck by the Front Panel Loops. Remove the Front Panel Loops and set aside.

Remove the Rear Panel Loops

10. Remove the Rear Panel Loops and set aside.

Remove the A13 Analog Module Cables

11. See Figure 14-2 below. In the right side Analog PCB bay, on the middle A13 module, remove the two semi-rigid coaxial (SRC) cables at A13 module connectors J4 and A13 J6. These are the first two connectors from the left.

12. Bend both cables away from the module assembly to free the cable under them connected to A13 connector J4.

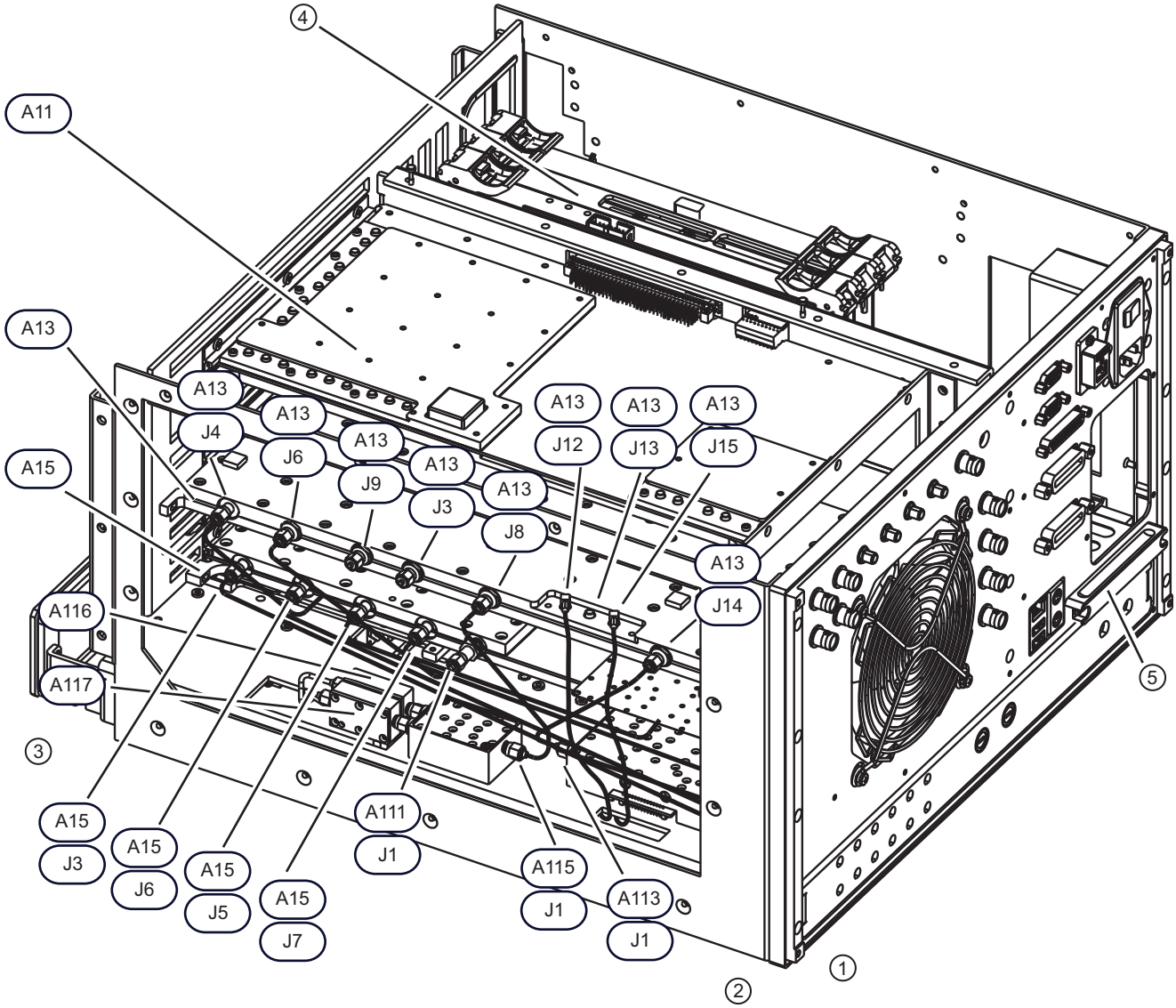

Figure 14-2. RF Deck Removal/Installation - Analog Modules and Semi-Rigid Coaxial Cables (1 of 2)

Orientation

1. Rear Panel
2. Left Side Chassis Plate
3. RF Deck Front Panel – Instrument Front Panel removed.
4. Digital PCB Assemblies
5. SATA Solid State Drive or Hard Disk Drive – Mounted in Rear Panel and removed before servicing the RF Deck.

Analog Module Assemblies

- A11 – IF Band Module – ND70076 – 62080
- A13 – Source Module – ND70077 – 62082
- A15 – Low Band Receiver Module – ND70075 – 62079

A13 Cables

Left to right, from instrument front to rear:

- J4 – Semi-rigid coaxial cable (SRC) to A111 connector J1.
- J6 – SRC to A15 module connector J11.
- J9 – Not used. Has terminator installed.
- J3 – Not used. Has terminator installed.
- J8 – SRC to A113 connector J1.
- J12 – MCX coaxial cable to RF Deck Bottom Side.
- J13 – Not used.
- J15 – Only used on MS4645A / MS4647A. MCX coaxial cable to RF Deck Bottom Side.
- J14 – SRC to A113 5-20 GHz Doubler Module connector J1.

A15 Cables

Left to right, from instrument front to rear:

- J3 – SRC – Connection depends on equipped option.
- Connects to RF Deck Bottom Side for Standard No Options.
- Connects to Rear Panel for Option 051, 061, or 062.
- J6 – SRC – Connects as above.
- J5 – SRC – Connects as above.
- J7 – SRC – Connects as above.
- J11 – SRC – Connects to A13 module connector J6.

A111 Cables

- A111 – LO Distribution Module Assembly
- A111 J1 – SRC to A13 module connector J4

RF Deck Top Side Modules

- A113 5-20 GHz Doubler Module – ND70080 – 64920 – J1 connects via an SRC to A13 module connector J14.
- A115 Low Band Transfer Switch – ND70079 – 64690 – J1 connects via an SRC to A13 module connector J8.
- A116 Low Band Bridge – ND70078 – 64016 – SRC connects to RF Deck Bottom Side.
- A117 Low Band Bridge – ND70078 – 64016 – SRC connects to RF Deck Bottom Side.

Figure 14-2. RF Deck Removal/Installation - Analog Modules and Semi-Rigid Coaxial Cables (2 of 2)

13. Again on the middle A13 analog module, remove the semi-rigid coaxial cable at J4.

Disconnect Sampler/LO Distribution Module Assembly Semi-Rigid Coaxial Cable

14. At the front center of the RF Deck, on the right side of the Sampler/LO Distribution Module Assembly, remove the end of the semi-rigid coaxial cable attached to the A111 LO Distribution Module Assembly J1 connector. See Figure 14-2 above. Remove the cable and set aside.

Disconnect Sampler/LO Distribution Module Assembly MCX Coaxial Cables

15. See Figure 14-3 below.

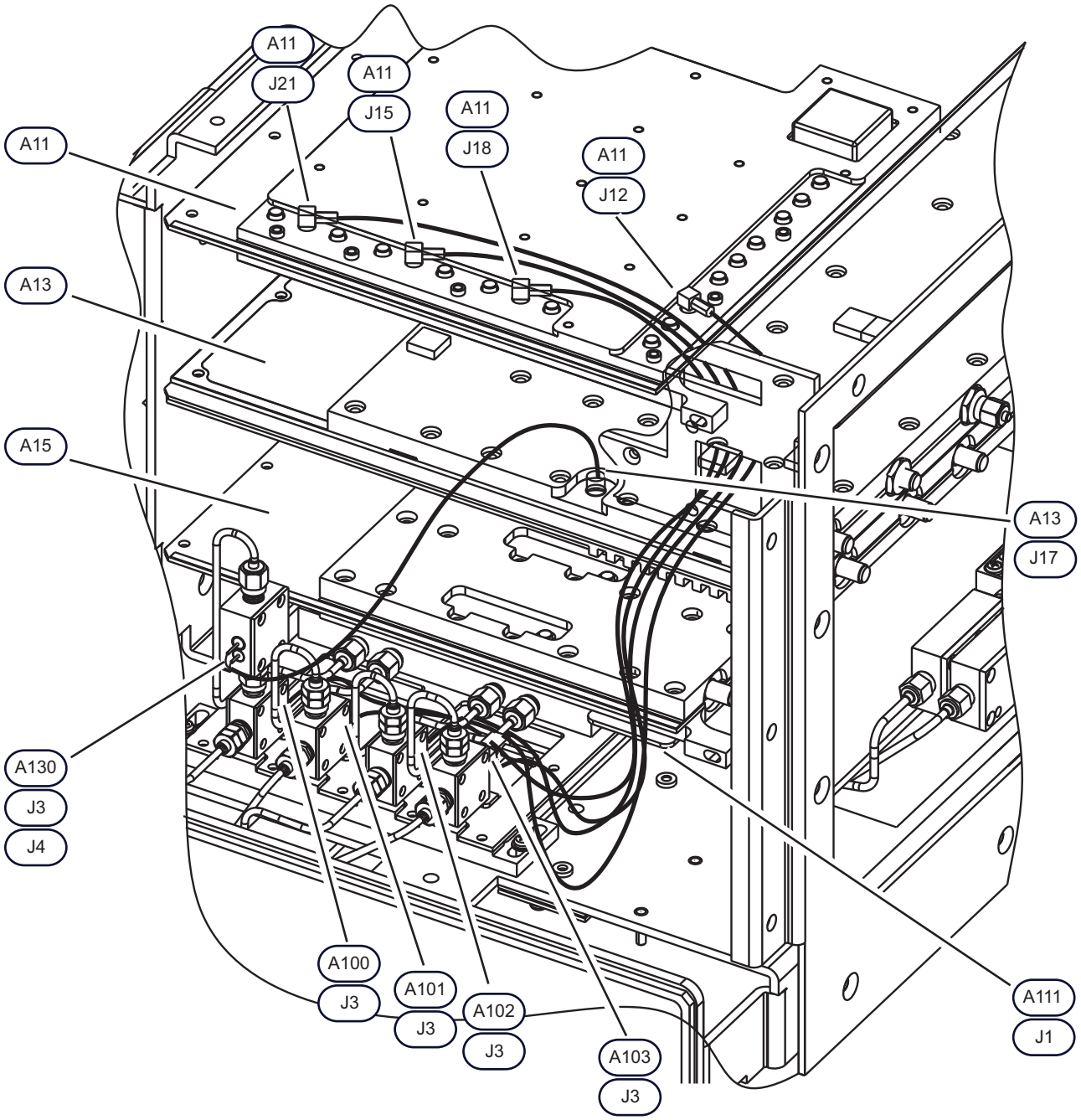

Figure 14-3. RF Deck Top Side - Sampler/LO Distribution Module - MCX Coaxial Cables (1 of 2)

For RF Deck removal, it is easiest to disconnect the MCX coaxial cables from the analog module assemblies and then remove the cables with the RF Deck.

Analog Module Assemblies

- A11 IF Band Module – ND70076 – 62080
- A13 Source Module – ND70077 – 62082
- A15 Low Band Receiver Module – ND70075 – 62079

Sampler/LO Distribution Module (SLODM) Assembly

- A111 LO Distribution Module Assembly – ND70081 – 66270 or ND73193 – 72440 – A111 connector J1 with semi-rigid coaxial cable (SRC) routes to A13 module connector J6. (Not shown in this drawing). A111 ND73193 – 72440 has an additional connector J6 (near the J1 connector).

SLODM - Continued

- A100 Sampler Module – ND70082 – 64180 – Mounts on the A111. Connector J3 (rear-facing) routes to A11 analog module connector J15.
- A101 Sampler Module – ND70082 – 64180 – Mounts on the A111. Connector J3 routes to A11 module J12.
- A102 Sampler Module – ND70082 – 64180 – Mounts on the A111. Connector J3 routes to A11 module J21.
- A103 Sampler Module – ND70082 – 64180 – Mounts on the A111. Connector J3 routes to A11 module J18.
- A130 LO Coupler Module – ND70083 – 68848
  - ‘Not present in all SLODM assemblies.
  - If present, mounts on top of the A100 or A101 Sampler Module.
  - Soldered-on coaxial cable on A130 pins J3/J4 routes to MCX connector on A13 module connector J17.
- A131 and A132 LO Coupler Module – No ND – 70685
  - Only present on instruments with Broadband/Millimeter-Wave Option 080/081.
  - If present, the A131 mounts on top of the A101 and the A132 mounts on top of the A103.
  - If present, the A130 is moved to the top of the A100.

Figure 14-3. RF Deck Top Side - Sampler/LO Distribution Module - MCX Coaxial Cables (2 of 2)

16. Disconnect the four (4) MCX coaxial cables that route from the Sampler/LO Distribution Assembly to the top A11 IF Band Module assembly. Disconnect the MCX coaxial cables at:

- A11 module connector J21 which routes to the A102 Sampler Module connector J3.
- A11 module connector J15 which routes to the A100 Sampler Module connector J3.
- A11 module connector J18 which routes to the A103 Sampler Module connector J3.
- A11 module connector J12 which routes to the A101 Sampler Module connector J3.

17. Disconnect the MCX coaxial cable that routes from the A130 LO Coupler Module (part of the Sampler/LO Distribution Module Assembly) to the middle A13 module connector J17. The other end of this cable is soldered-on at A130 front-facing pins J3 (upper) and J4.

18. Route the disconnected MCX cables through the chassis so that they are loose, cutting cable ties as required.

Disconnect Signal/Power Cables

19. Position instrument upside down. See Figure 14-4 below

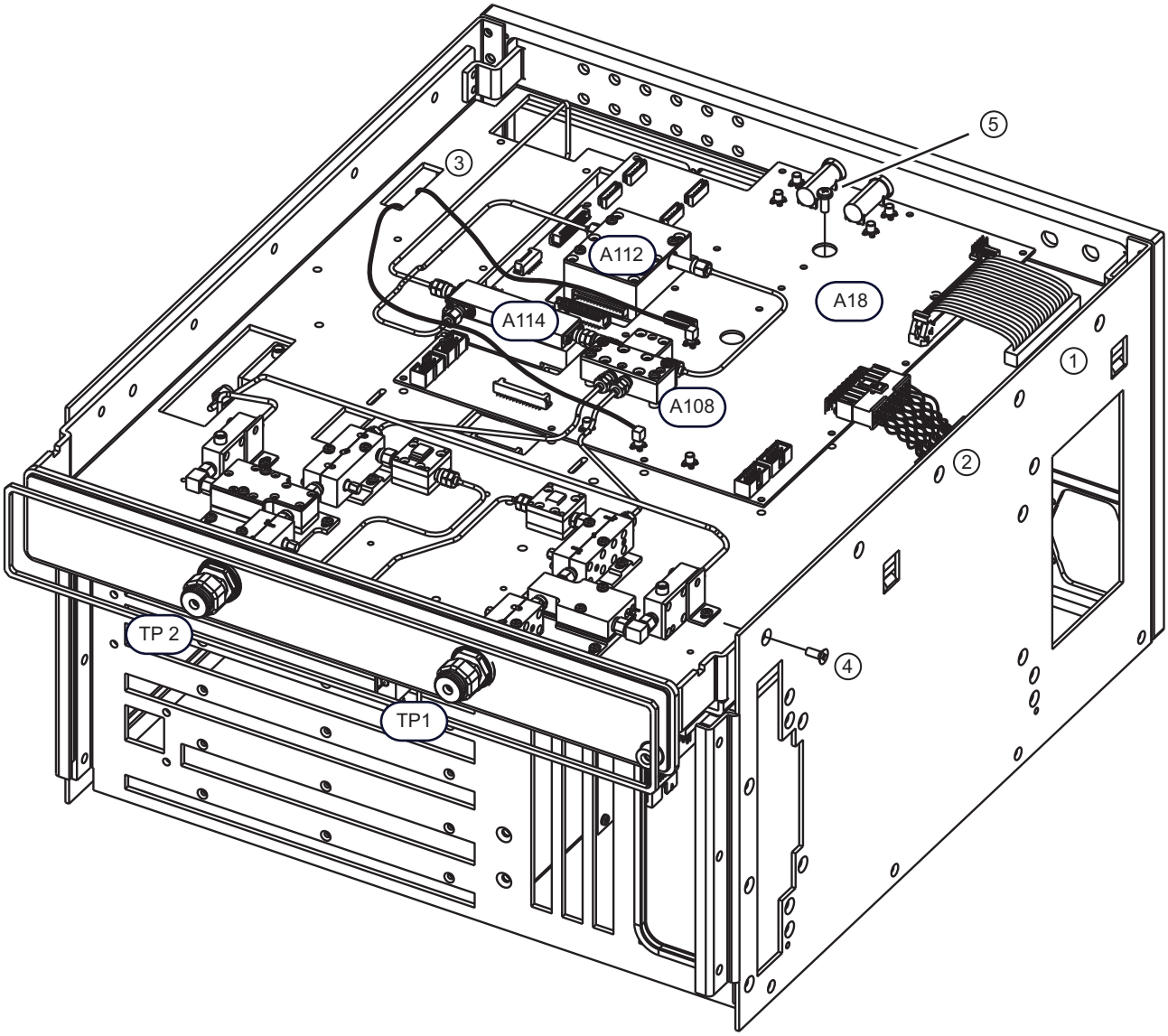

Figure 14-4. RF Deck Bottom Side - Cables and Mounting Hardware (1 of 2)

RF Deck Bottom Cable Connections and Mounting Hardware.	Cables
Typical MS4647A Standard No Options shown.	1. Disconnect ribbon cable from A18 PCB connector J18. Cable routes to MB2 PCB connector P42.
A18 PCB and Modules • A112 Switched Doubler Module – ND70098 – 59775 • A114 Switched Quadrupler Module – ND70099 – 60-327 • A108 V Integrated High Band Transfer Switch Module, 70 GHz – ND70093 – 66619 • A18 RF Control PCB Assembly – ND70068 – 61929-3	2. Disconnect cable harness from A18 PCB connector P3. Cable routes to MB2 2 PCB connector P41. Both P41 and P42 are located on the bottom side of the MB2 PCB. 3. Disconnect MCX coaxial cables coming through from RF Deck Top Side. **Mounting Hardware** 4. Five (5) flat head Phillips M4 × 8 mm screws on each side, 10 total.
Ports • TP2 – Test Port 2 • TP1 – Test Port 1	5. Four (4) pan head Phillips M4 × 10 mm screws across middle of RF Deck chassis

Figure 14-4. RF Deck Bottom Side - Cables and Mounting Hardware (2 of 2)

20. Disconnect the Power Supply Module main power cable from the Motherboard 2 (MB2) PCB Assembly at connector P42. This connector and P41 below are the only two downward facing connectors on the MB2 PCB.

21. Disconnect the Power Supply Module signal cable from the MB2 PCB at connector P41.

22. On the A18 RF Control PCB Assembly, disconnect the MCX coaxial cable at connector J7. The other end of this cable should already be loose.

23. On the A18 RF Control PCB Assembly, disconnect the MCX coaxial cable at connector J12. The other end of this cable should already be loose.

Remove RF Deck Hardware

24. See Figure 14-4, “RF Deck Bottom Side - Cables and Mounting Hardware” above for orientation and references.

25. On each side of the RF Deck, remove the five (5) flat head Phillips M4 × 8 mm screws; 10 screws total.

26. Position the instrument upside down with the bottom side of the RF Deck visible.

27. Along the left-to-right centerline of the RF Deck, remove the four (4) pan head Phillips M4 × 10 mm screws.

Remove Deck

28. Proceed with caution so as to not damage cables, modules, or loops.

29. Lift the front of the RF Deck up slightly, slide the deck towards the front about 1 cm (~1/2”) and lift out of the chassis. Take care to protect any connected cables and harnesses that come out with the RF Deck.

Attach Fixture

30. If servicing modules on the RF Deck, attach two (2) T-3545 fixtures to the RF Deck using the four (4) pan head Phillips M4 × 10 mm screws removed above.

- The orientation can be with either end of the fixture towards the front.
- The top of the fixture should be higher than the loops on the Sampler/LO Distribution Module Assembly.
- If multiple uses of the fixtures are anticipated, best practices recommend obtaining knob-head M4 fasteners to speed fixture installation.

31. The RF Deck Top Side Loops and modules should be protected by the fixture plates.

Service Modules

32. The RF Deck is ready for servicing the top side modules or to provide access to deeper dwelling components in the chassis.

14-4 Install the RF Deck

Use this procedure to install the RF Deck after either replacing a hidden RF Module or to access another deeper dwelling component.

Applicability and Recommended Fixture

- This procedure is for all models with all option combinations.
- Specifics for some model and/or option combinations are noted as required in the procedure.
- T3545 – RF Deck Fixture
  - See Section B-2 "T3545 RF Deck Fixture" on page B-1 for specifications.

Procedure

Prerequisites

1. The RF Deck has been removed from the chassis and the T3545 Fixture has been added.
2. The Front Panel assembly has been removed from the instrument chassis.
3. Position the instrument chassis upside down, so the bottom side of the Motherboard 2 PCB Assembly is visible. The orientation below is with the front panel location towards the technician.

Add RF Deck

4. Remove the fixtures from the RF Deck, saving the screws for the deck installation below, taking care to protect the top side loops, and if equipped, the front panel loops.
   - Best practices recommend removing both the front and rear panel loops before removing or installing the RF Deck.
5. Position the RF Deck upside down over the instrument chassis with the test ports and loops towards the front, and the two black Bias Tee fuses (on the A18 PCB) towards the Rear Panel.
6. Insert the RF Deck rear panel in first, sliding the deck back and then down in the front.
7. Ensure that the connector on the Motherboard 2 PCB is clear of the rear cutout of the RF Deck before laying the Deck into the chassis.
8. Along the left-to-right center of the deck, insert the four (4) pan head Phillips M4 × 10 mm screws. Do not tighten.
9. On each side, insert the five (5) flat head Phillips M4 × 8 mm screws; 10 screws total. Do not tighten.
10. When all screws are correctly inserted and the RF Deck is correctly positioned, tighten all 14 screws.

Connect Motherboard 2 Cables

11. Plug in the main ribbon cable between A18 PCB P3 and MB2 connector P42.
12. Plug in the cable between A18 PCB P3 and MB2 PCB connector P41.
13. Plug in the MCX coaxial cable into A18 PCB J7.
14. Plug in the MCX coaxial cable into A18 PCB J12. The other end of this cable will be connected in a step below.
    - This cable is only on the MS4645A / MS4647A.

Connect the Sampler/LO Distribution Module Assembly MCX Coaxial Cables

15. Turn the instrument so that it is right side up.
16. At the A111 LO Distribution Module Assembly at the front of the RF Deck, route the MCX coaxial cable from the left side A130 LO Coupler Module towards the right and then up to the middle A13 module and its J17 connector. Note that the cable is permanently attached at the A130 LO Coupler Module.

17. The four (4) MCX Sampler Module coaxial cables should still be attached to the appropriate Sampler Module. If the cables were not removed, skip ahead to Step #18 below. If they were removed, proceed with these sub-steps:

a. At the A111 LO Distribution Module, attach the four (4) MCX coaxial cables to the A100-A103 Sampler Modules.

b. Attach the MCX coaxial cable to the right side A103 Sampler Module first, and, when viewed from the front, angle the connector approximately 45 degrees to the right.

c. Next, attach the MCX coaxial cable to the right center A102 Sampler Module, again, angling the connector about 45 degrees to the right.

d. Next, attach the MCX coaxial cable to the left center A101 Sampler Module, again, angling the connector about 45 degrees to the right.

e. Finally, attach the remaining MCX coaxial cable to the left A100 Sampler Module, angling the connector about 45 degrees to the right.

18. Route the four (4) Sampler Module MCX coaxial cables up to the top – A11 IF Band Module PCB Assembly – ND70076 – 62080. Connect them as:

- A11 module connector J21 – Routes to the A102 Sampler Module connector J3.
- A11 module connector J15 – Routes to the A100 Sampler Module connector J3.
- A11 module connector J18 – Routes to the A103 Sampler Module connector J3.
- A11 module connector J12 – Routes to the A101 Sampler Module connector J3.

19. Route the remaining MCX coaxial cable to the middle A13 module and connect it to the A13 module connector J17. This cable was from the A130 Coupler Module pins J3/J4.

Connect A13 Module Semi-Rigid Coaxial Cables

20. Route the removed semi-rigid coaxial cable from the middle A13 module J6 connector to the A111 LO Distribution Module Assembly and its right side J1 connector. At the A13 module, this cable should go under the two cables removed from the J4 and J6 connectors.

21. Loosely attach the cable to the A111 J1 connector and the A13 module connector J4, taking care to mate the center pins correctly and make sure the threading is correct. Torque the connections using a 5/16” 8 lbf · in. torque end wrench.

22. Attach the two semi-rigid cable connectors removed from the bottom A15 module J3 and J6 connectors. These cables should be outside of the cable connected to A13 module J4. Make sure both connectors are correctly aligned and threaded.

23. Tighten all connections using the 5/16” torque end wrench set to 8 lbf · in.

Install Front Panel

24. Position the chassis so that it is right side up.

25. Place a block under the front of the instrument chassis.

26. Install the Front Panel.

- See Section 10-6 “Install the Phase 1 Front Panel Assembly” on page 10-19

Completion

27. Replace the Inner Cover.

- See Section 10-6 “Install the Phase 1 Front Panel Assembly” on page 10-19

28. Replace the Outer Cover.

- See Section 10-6 “Install the Phase 1 Front Panel Assembly” on page 10-19

Chapter 15 — RF Deck Top Side Modules

15-1 Introduction

These procedures describe how to replace RF Deck Top Side modules once the deck has been removed from the instrument. This chapter contains the following procedures:

RF Deck Top Right Side Modules

- Section 15-2, “Top Side Right Modules Overview” on page 15-2
  - Section 15-3, “Replace the A113 5-20 GHz Doubler Module” on page 15-5.
  - Section 15-4, “Replace the A115 Low Band Transfer Switch Module” on page 15-9.
  - Section 15-5, “Replace the A116/A117 Low Band Bridge Module” on page 15-12

RF Deck Top Side Attenuators

- Section 15-6, “RF Deck Attenuator Overview” on page 15-16
  - Section 15-7, “Replace the Low Band Source Attenuator” on page 15-18

Sampler/LO Distribution Module Assembly

- Section 15-8, “SLODM Overview” on page 15-26
  - Section 15-9, “Identification of SLODM Assembly Variants” on page 15-29
  - Section 15-10, “Remove the Sampler/LO Distribution Module Assembly” on page 15-41
  - Section 15-11, “Remove the A130, A131, and/or A132 LO Coupler Modules” on page 15-44
  - Section 15-12, “Replace the A130, A131, and/or A132 LO Coupler Modules” on page 15-49
  - Section 15-13, “Remove the A100, A101, A102, and/or A103 Sampler Modules” on page 15-51
  - Section 15-14, “Install the A100, A101, A102, and/or the A103 Sampler Module” on page 15-55
  - Section 15-15, “Replace the A111 LO Distribution Module – ND73193 – 72440” on page 15-57
  - Section 15-16, “Replace the Obsolete A111 LO Distribution Module – ND70081 – 66270” on page 15-61
  - Section 15-17, “Install the SLODM onto the RF Deck” on page 15-66

In the procedures above, the Front Panel and the RF Deck are assumed to have been removed from the instrument chassis and the protective T3545 Fixture installed on the RF Deck assembly.

15-2 Top Side Right Modules Overview

Note	These procedures must be performed with the RF Deck removed from the instrument chassis.

Use this procedure to replace top side modules after the deck has been removed from the instrument chassis. The procedures in the next sections are applicable to all MS4640A models with any combination of options.

Applicability

- The general RF Deck removal and installation procedure is applicable to all instrument models with any combination of options.
- Cabling and replacement part variations are present in VNA phases, models, and equipped options especially in the Sampler/LO Distribution Module assembly and the top center Low Band Attenuators equipped with Option 061 and Option 062
- These are covered on a case by case basis in the sections below.

Module Locations

The modules are grouped by their location on the RF Deck Top Side and by the equipped option:

- RF Deck Top Right Side Modules
- RF Deck Top Side Attenuator Modules for Option 061
- RF Deck Top Side Attenuator Modules for Option 062
- RF Deck Top Center Modules, the Sampler/LO Distribution Module (SLODM) assembly

RF Deck - Top Right Side Modules

The figure below (Figure 15-1 on page 15-3) shows the four common modules located on the RF Deck Top Right Side for all instrument models with any combination of options.

In general, the only reason to remove the modules is to replace them. Also in general, the replacement procedure is the same:

- Remove connecting semi-rigid coaxial cables.
- Remove any connected signal/power cables.
- Remove any module-to-chassis mounting hardware.
- Loosen and then remove the RF connectors between the modules.

The following procedures support servicing the RF Deck Top Right Side Modules:

- Section 15-3, “Replace the A113 5-20 GHz Doubler Module” on page 15-5
- Section 15-4, “Replace the A115 Low Band Transfer Switch Module” on page 15-9
- Section 15-5, “Replace the A116/A117 Low Band Bridge Module” on page 15-12

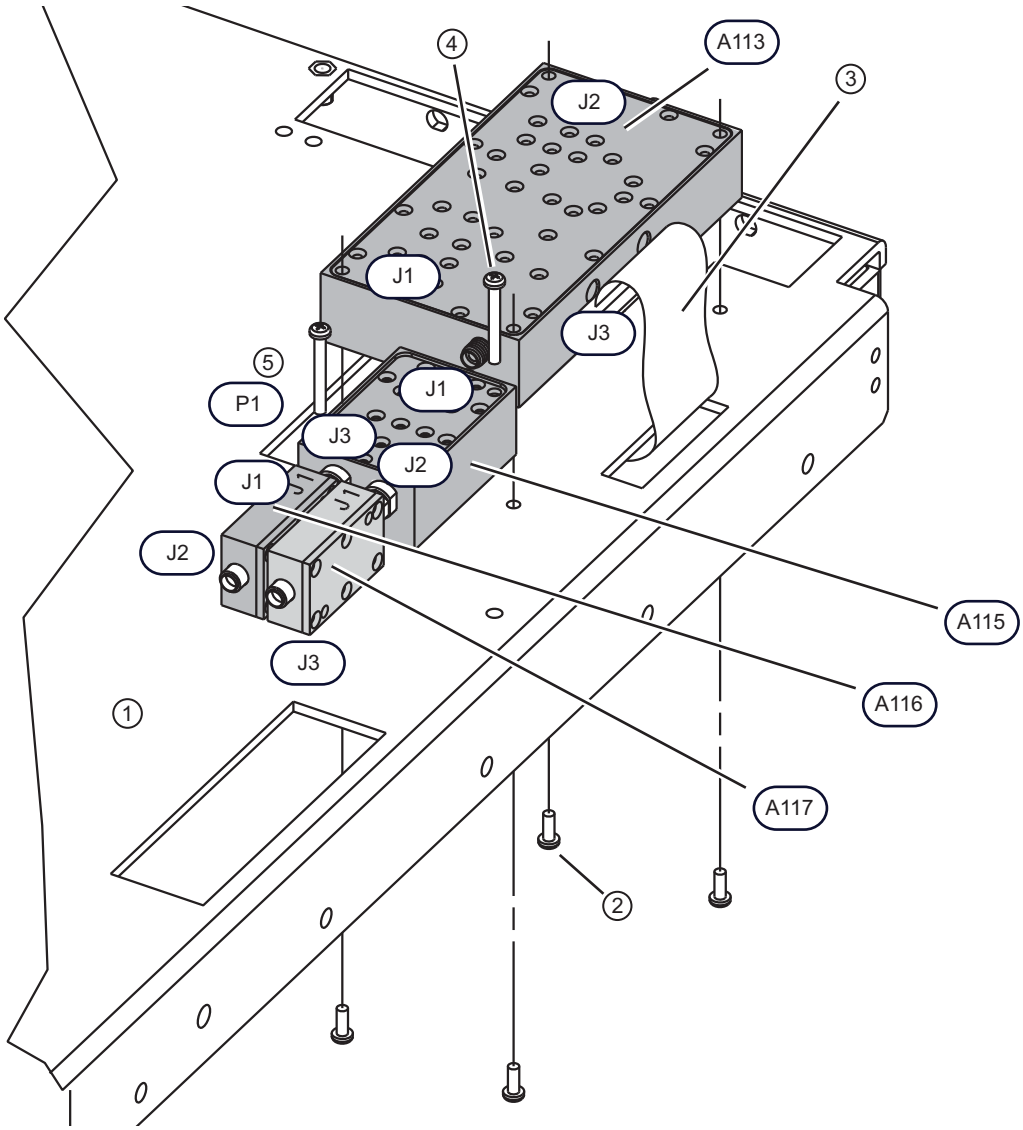

Figure 15-1. RF Deck Top Right Side Modules – A113, A115, A116, and A117 (1 of 2)

RF Deck

1. RF Deck Top Side. The Front Panel and the RF Deck have been removed from the instrument chassis.

A113 5-20 GHz Doubler Module – ND70080 – 64920

2. Four (4) pan head Phillips M3 × 8 mm mounting screws from the RF Deck Bottom Side into the A113 5-20 GHz Doubler Module.
3. Ribbon cable from A113 J3 connector to RF Deck Bottom Side A18 RF Control PCB Assembly P6 connector.
   - J1 Connector – Towards front.
   - J2 Connector – Towards rear.

A115 Low Band Transfer Switch Module – ND70079 – 64690

4. Two (2) pan head Phillips M3 × 30 mm mounting screws through the A115 Low Band Transfer Switch Module into the RF Deck chassis.

A115 Connectors

5. Ribbon cable (not shown here) from A115 P1 connector to RF Deck Bottom Side A18 PCB P1 connector.
   - J1 Connector – Towards rear.
   - J2 Connector – Outer connector, towards front.
   - J3 Connector – Inner connector, towards front.

A116 and A117 Low Band Bridge Modules

- A116 – Low Band Bridge Module – ND70079 – 64016
  - The A116 in the inner module.
- A117 – Low Band Bridge Module – ND70079 – 64016
  - The A117 is the outer module.
- Note that there are four (4) Low Band Bridge Modules modules in the instrument which are the same part.
- Two here (A116, A117) on the RF Deck Top Side and two (A118, A119) in Test Port 1 and 2 module groups on the RF Deck Bottom Side.

A116/A117 Connectors

- J1 Connector – Towards rear.
- J2 Connector – Towards front.
- J3 Connector – Towards RF Deck Bottom Side (not shown here)

Figure 15-1. RF Deck Top Right Side Modules – A113, A115, A116, and A117 (2 of 2)

15-3 Replace the A113 5-20 GHz Doubler Module

Use this procedure to remove and then install a replacement A113 5-20 GHz Doubler Module. See Figure 15-1 on page 15-3 above for orientation and module location.

Part and Applicability

- A113 – 5-20 GHz Doubler Module – ND70080 – 64920
- The A113 5-20 GHz Doubler Module is used by all VectorStar VNA model numbers with any combination of options.

Identification

See Figure 15-2 below for port location.

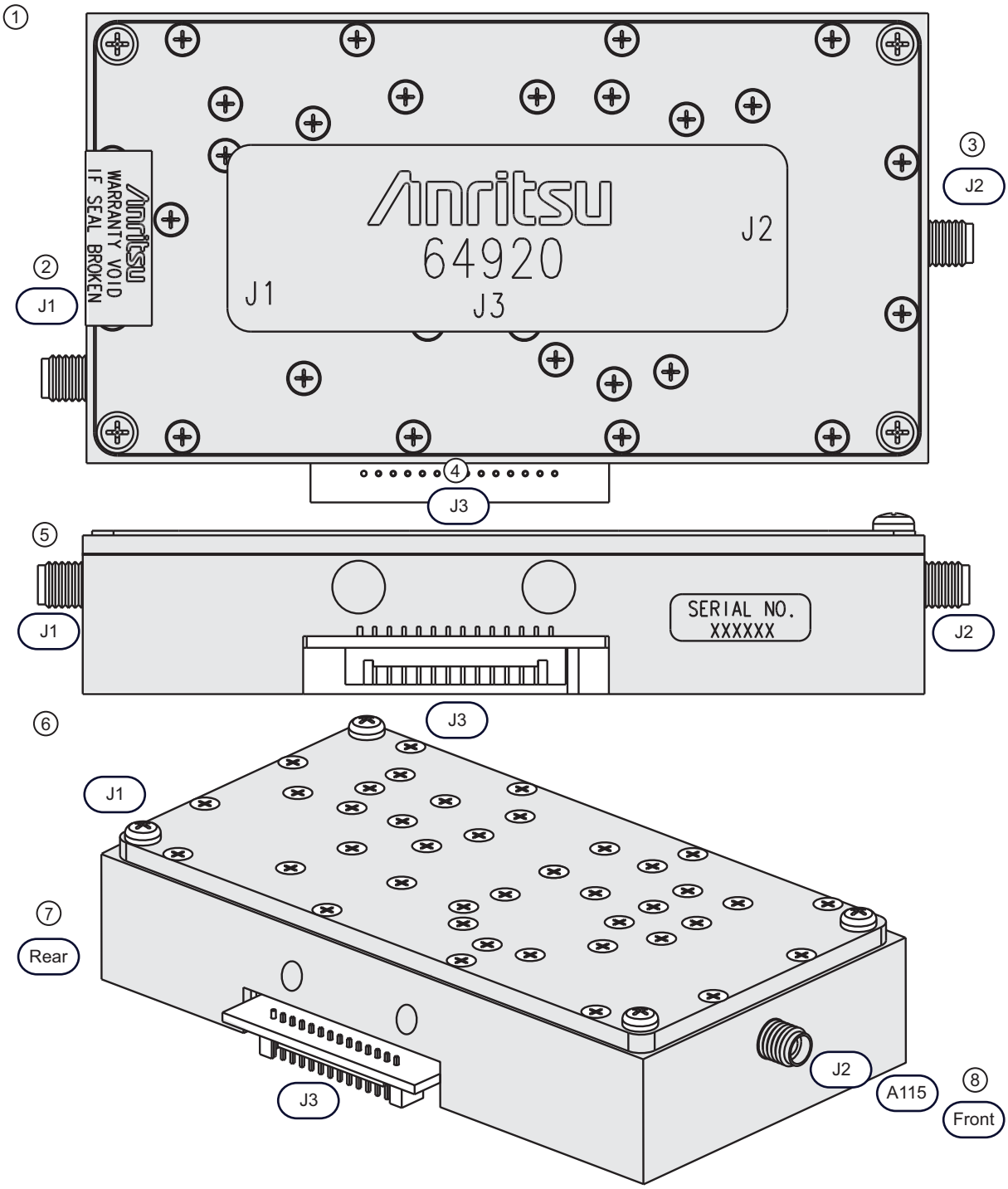

1. Top View	5. Side View
2. J1 Connector	6. Three-Quarter View
3. J2 Connector	7. Rear panel
4. J3 Ribbon Cable Connector	8. A115 Low Band Transfer Switch and front panel

Figure 15-2. A113 5-20 GHz Doubler Module – ND70080 – 64920 – Detail

Procedure

Common Procedures

1. Prepare work area, work surface, and observe safety issues.
   - See Section 7-4 “Common - Prepare Work Area and Safety” on page 7-9.
2. Remove Outer Cover.
   - See Section 7-5 “Common - Remove Outer Cover” on page 7-10.
3. Position the instrument so that it is right-side up, RF deck down.
4. Remove Inner Top Cover.
   - See Section 7-6 “Common - Remove Inner Cover” on page 7-13.
5. Add blocking under front of instrument.
6. Remove and set aside the Front Panel.
   - To remove it, see:
     - Section 10-3 “Remove the Phase 1 Front Panel Assembly” on page 10-3
     - Section 10-4 “Remove the Phase 2 Front Panel Assembly” on page 10-11
7. Position the instrument upside down.

Remove the RF Deck

8. Loosen and remove the semi-rigid coaxial cables between the analog module assemblies and the RF Deck. Recommended is removing all cables completely from the three analog module assemblies.
9. For the A113 5-20 GHz Doubler Module, be sure to remove the semi-rigid coaxial cable between the A113 5-20 GHz Doubler Module J2 connector and the middle A13 Source Module and its J14 High Band Source (HB SRC) connector.
10. Remove the RF Deck.
    - See Section 14-3 “Remove the RF Deck” on page 14-4.
11. Attach two (2) T3545 RF Deck Fixtures to the RF Deck chassis.
    - See Section B-2 “T3545 RF Deck Fixture” on page B-1.

Remove Cables

12. Disconnect the ribbon cable between the A113 5-20 GHz Doubler Module J3 connector and the RF Deck Bottom Side A18 RF Control PCB Assembly J6 connector. Leave the cable connected to the A18 RF Control PCB Assembly.
13. Disconnect the semi-rigid coaxial cable from the rear A113 5-20 GHz Doubler Module J2 connector. Bend the coaxial cable gently out of the way.
14. The coaxial cable connected to the A113 5-20 GHz Doubler Module J1 connector should already be removed.

Remove the A113 5-20 GHz Doubler Module

15. From the RF Deck Bottom Side, remove the four (4) pan head Phillips M3 × 8 mm screws holding the A113 5-20 GHz Doubler Module to the chassis.
16. Remove the A113 5-20 GHz Doubler Module from the chassis.

Prepare the Replacement A113 5-20 GHz Doubler Module

17. If the ribbon cable is still attached on the to-be-replaced A113 5-20 GHz Doubler Module, remove it and install on the replacement A113 5-20 GHz Doubler Module.

Install the A113 5-20 GHz Doubler Module

18. Place the A113 5-20 GHz Doubler Module into position in the chassis and connect the signal/power ribbon cable to the A113 5-20 GHz Doubler Module left side J3 connector.

19. From the RF Deck Bottom Side, insert the four (4) pan head Phillips M3 × 8 mm screws into the A113 5-20 GHz Doubler Module. When all are correctly threaded, tighten.

Connect Coaxial Cables

20. Connect the rear panel semi-rigid coaxial cable to the A113 5-20 GHz Doubler Module rear J1 connector. Make sure the connector is aligned and correctly threaded. Tighten finger tight.

21. Use a 5/16” torque end wrench set to 8 lbf · in to torque the cable connector.

Check Connections

22. Check that all cable connections are correctly and fully inserted.

23. Check that all fastening hardware is installed and tight.

24. Check that all RF connections are correctly inserted, connected, and torqued.

Install RF Deck

25. Install the RF Deck into the instrument chassis.

- See Section 14-4 “Install the RF Deck” on page 14-12.

26. For the A113 5-20 GHz Doubler Module, install the semi-rigid coaxial cable between the A113 5-20 GHz front J2 connector and the middle A13 Source Module and its J14 High Band Source (HB SRC) connector.

Install the Front Panel

27. Position the instrument right side up.

28. Apply blocking under the front of the instrument.

29. Install the Front Panel assembly.

- See Section 10-6 “Install the Phase 1 Front Panel Assembly” on page 10-19.

Completion Procedures

30. Install the Inner Cover.

- See Section 7-7 “Common - Install Inner Cover” on page 7-15.

31. Install the Outer Cover.

- See Section 7-8 “Common - Install Outer Cover” on page 7-16.

32. Tighten the four handle screws.

15-4 Replace the A115 Low Band Transfer Switch Module

Use this procedure to remove and then install a replacement A115 Low Band Transfer Switch module (A115 LBTS). See Figure 15-1 on page 15-3 above for general orientation and module location.

Part and Applicability

- A115 Low Band Transfer Switch – ND70079 – 64690
- This part is applicable to all VNA models with any combination of options.

Identification

See Figure 15-3 below for module port and connector location.

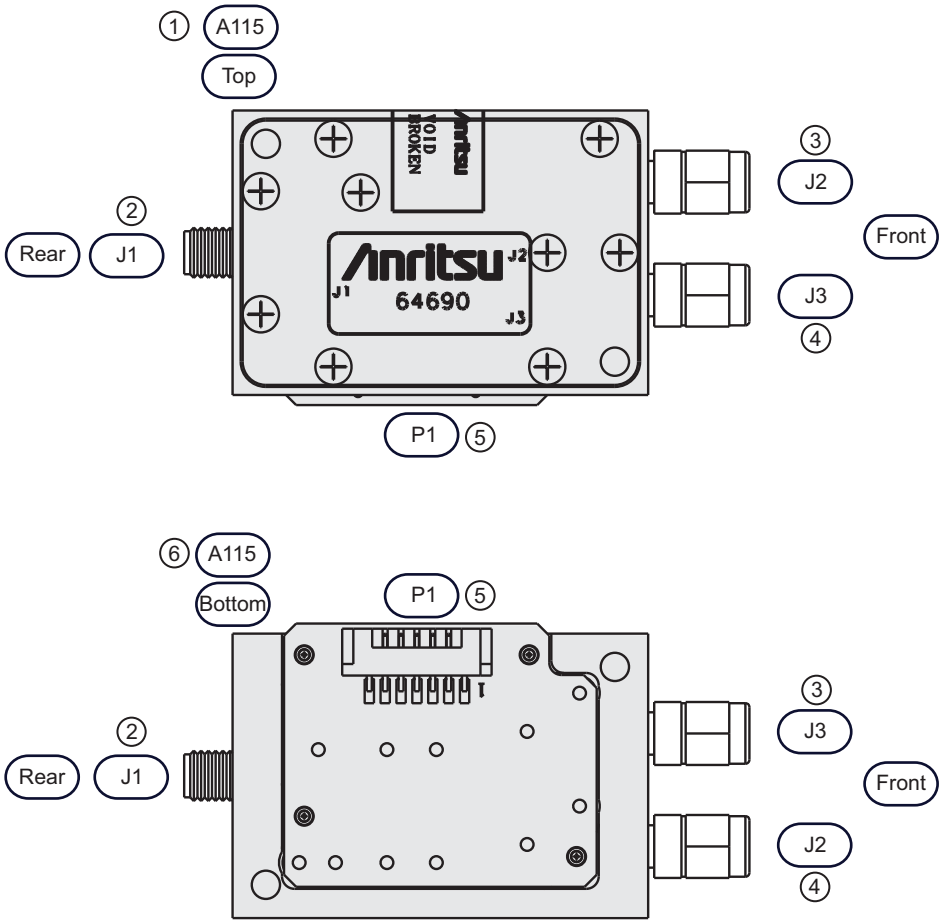

1. A115 Top View	4. A115 J3 Connector – Inner connector towards front. Connects to A116 Low Band Bridge connector J1.
2. A115 J1 Connector – Towards rear. Connects via a semi-rigid coaxial cable to the middle A13 module connector J8.	5. A115 P1 Connector – Routes to RF Deck Bottom Side A18 PCB and connects to A18 PCB connector P1.
3. A115 J2 Connector – Outer connector towards front. Connects to A117 Low Band Bridge connector J1.	6. A115 Bottom View

Figure 15-3. A115 Low Band Switch Module – ND70079 – 64016

Procedure

Common Procedures

1. Prepare work area, work surface, and observe safety issues.
   - See Section 7-4 “Common - Prepare Work Area and Safety” on page 7-9.
2. Remove Outer Cover.
   - See Section 7-5 “Common - Remove Outer Cover” on page 7-10.
3. Position the instrument so that it is right-side up, RF deck down.
4. Remove Inner Top Cover.
   - See Section 7-6 “Common - Remove Inner Cover” on page 7-13.
5. Add blocking under front of instrument.
6. Remove and set aside the Front Panel.
   - To remove it, see:
     - Section 10-3 “Remove the Phase 1 Front Panel Assembly” on page 10-3
     - Section 10-4 “Remove the Phase 2 Front Panel Assembly” on page 10-11
7. Position the instrument upside down.

Remove the RF Deck

8. Loosen and remove the semi-rigid coaxial cables between the analog module assemblies and the RF Deck. Best practices recommend removing all cables completely from the two assemblies.
9. For the A115 Low Band Transfer Switch Module, be sure to remove the semi-rigid coaxial cable between the A115 Low Band Transfer Switch Module J1 connector and the A18 RF Control PCB Assembly J8 Low Band Source (LB SRC) connector.
10. Remove the RF Deck.
    - See Section 14-3 “Remove the RF Deck” on page 14-4.
11. Add the T3545 RF Deck Fixture to the RF Deck chassis.
    - See Section B-2 “T3545 RF Deck Fixture” on page B-1.

Remove Cables

12. Disconnect the ribbon cable between the A115 Low Band Transfer Switch Module J3 connector and the RF Deck Bottom Side A18 RF Control PCB Assembly P1 connector. Leave the cable connected to the A18 RF Control PCB Assembly.
13. The coaxial cable connected to the A115 Low Band Transfer Switch Module J1 connector should already be removed.

Disconnect the A116 Low Band Bridge Module and the A117 Low Band Bridge Module

14. Using a 5/16” plain end wrench and a 5/16” torque wrench set to 8 lbf · in, loosen the RF connection between each Low Band Bridge Module and the A115 Low Band Transfer Switch Module.
15. Remove each Low Band Bridge Module RF connector and bend them and their attached semi-rigid coaxial cables slightly towards the front panel.
    - A116 Low Band Bridge Module – ND70079 – 64016 – The A116 is the inner module.
    - A117 Low Band Bridge Module – ND70079 – 64016 – The A117 is the outer module.
    - Note that there are four (4) Low Band Bridge Modules in the instrument. There are two here (A116, A117) on the RF Deck Top Side and two (A118, A119) in Test Port 1 and 2 module groups on the RF Deck Bottom Side.

Remove the A115 Low Band Transfer Switch Module

16. From the RF Deck Top Side, remove the two (2) pan head Phillips M3 × 30 mm screws holding the A115 Low Band Transfer Switch Module to the chassis.

17. Remove the A115 Low Band Transfer Switch Module from the chassis.

Prepare the Replacement A115 Low Band Transfer Switch Module

18. If the ribbon cable is still attached on the to-be-replaced A115 Low Band Transfer Switch Module, remove it and install on the replacement A115 Low Band Transfer Switch Module.

Install the Replacement A115 Low Band Transfer Switch Module

19. Place the replacement A115 Low Band Transfer Switch Module into position in the chassis and connect its signal/power ribbon cable to the A113 5-20 GHz Doubler Module P1 connector. The other end of the cable should be connected to the RF Deck Bottom Side A18 RF Control PCB Assembly at connector P1.

20. From the RF Deck Top Side, insert the two (2) pan head Phillips M3 × 30 mm screws to hold the A115 5-20 GHz Doubler Module to the chassis. Tighten both screws.

Connect the A116 Low Band Bridge Module and the A117 Low Band Bridge Module

21. Align the RF connections between the inner A116 Low Band Bridge Module and the A115 Low Band Transfer Switch Module. Make sure the connectors are correctly aligned and threaded. Holding the A116 Low Band Bridge Module, tighten finger tight.

22. Align the RF connections between the outer A117 Low Band Bridge Module and the A115 Low Band Transfer Switch Module. Make sure the connectors are correctly aligned and threaded. Holding the A117 Low Band Bridge Module, tighten finger tight.

23. Again using 5/16” plain and torque end wrenches, torque each RF connection to 8 lbf · in.

Check Connections

24. Check that all cable connections are correctly and fully inserted.

25. Check that all fastening hardware is installed and tight.

26. Check that all RF connections are correctly inserted, connected, and torqued.

Install RF Deck

27. Install the RF Deck into the instrument chassis.

- See Section 14-4 “Install the RF Deck” on page 14-12.

28. For the A115 Low Band Transfer Switch Module, install the semi-rigid coaxial cable between the A115 Low Band Transfer Switch Module J1 connector and the middle A13 Source Module and its J8 Low Band Source (LB SRC) connector.

Install the Front Panel

29. Position the instrument right side up.

30. Apply blocking under the front of the instrument.

31. Install the Front Panel assembly.

- See Section 10-6 “Install the Phase 1 Front Panel Assembly” on page 10-19.

Completion Procedures

32. Install the Inner Cover.

- See Section 7-7 “Common - Install Inner Cover” on page 7-15.

33. Install the Outer Cover.

- See Section 7-8 “Common - Install Outer Cover” on page 7-16.

34. Tighten the four handle screws.

15-5 Replace the A116/A117 Low Band Bridge Module

Use this procedure to replace either the inner A116 Low Band Bridge Module or the outer A117 Low Band Bridge Module. See Figure 15-1 on page 15-3 above for orientation and module location.

Parts and Applicability

- A116 Low Band Bridge Module – ND70078 – 64016 – Inner Module
- A117 Low Band Bridge Module – ND70078 – 64016 – Outer Module
  - The two units above are mounted on the RF Deck Top Right Side.
  - Note that there are four (4) Low Band Bridge modules in the instrument. There are two here (A116, A117) and two (A118, A119) in Test Port 1 and 2 module groups on the RF Deck Bottom Side.
- Both A116 and A117 modules are connected to the A115 Low Band Transfer Switch.
- These modules are applicable to all VNA models with any combination of options.

Identification

See Figure 15-4 below for identification of the module connectors.

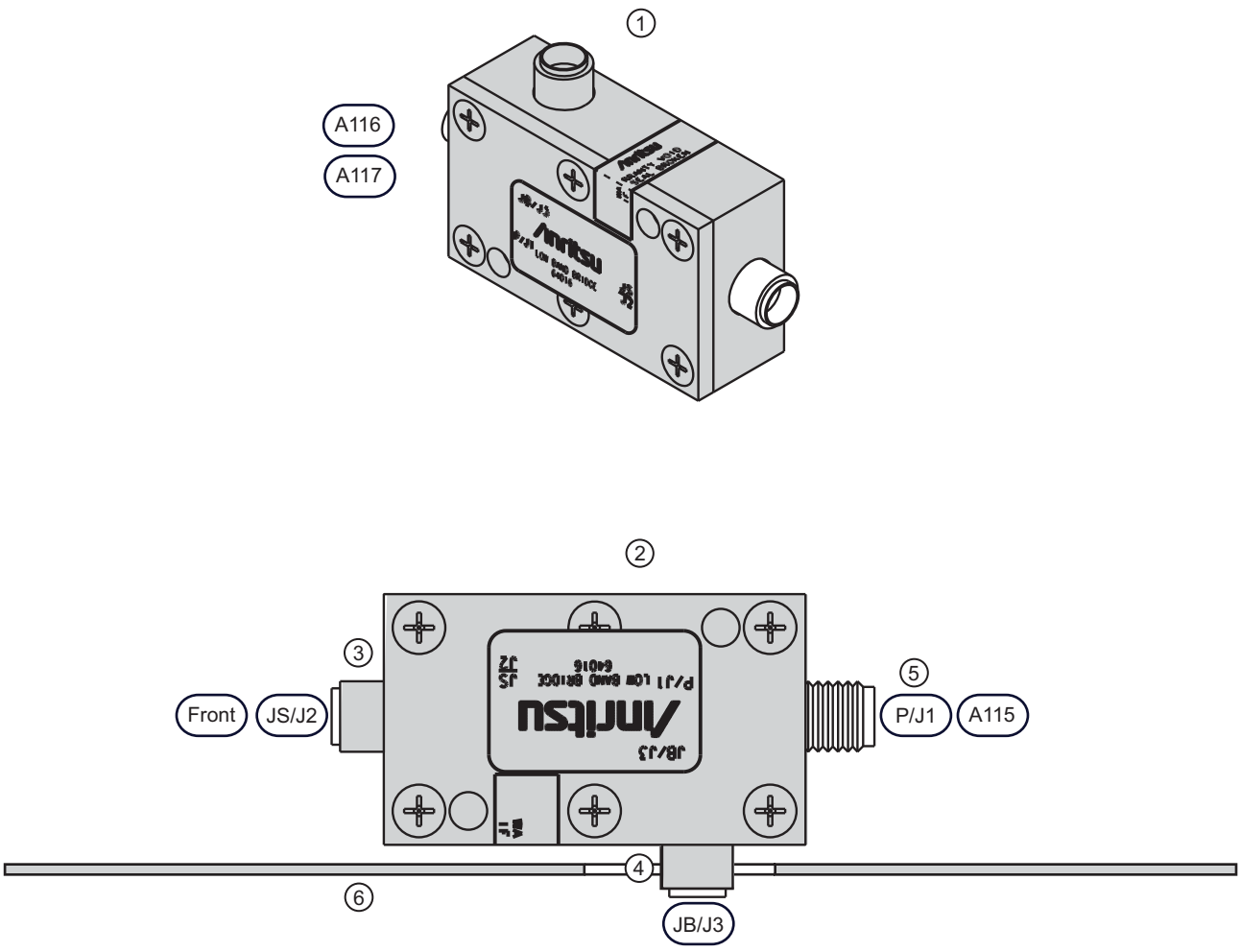

Figure 15-4. A116/A117 Low Band Bridge Module – ND70078 – 64016 – Detail

Orientation	Low Band Bridge Ports and Connectors
1. A116 Low Band Bridge Module (inner) and A117 Low Band Bridge Module (outer) oriented right side up. **Installation Orientation** 2. A116/A117 Low Band Bridge Module orientation in the as-installed position on the RF Deck Top Side.	3. Low Band Bridge Module JS/J2 port – Towards the front panel. 4. Low Band Bridge Module JB/J3 port – Towards the RF Deck Bottom Side. 5. Low Band Bridge Module P/J1 port • Towards the rear panel. • The A116 Low Band Bridge Module P/J1 port connects to the A115 Low Band Switch J3 connector and A117 to the A115 J2 connector. 6. RF Deck chassis. JB/J3 connector protrudes through RF Deck chassis into bottom side for connections.

Figure 15-4. A116/A117 Low Band Bridge Module – ND70078 – 64016 – Detail

Procedure

Common Procedures

1. Prepare work area, work surface, and observe safety issues.

- See Section 7-4 “Common - Prepare Work Area and Safety” on page 7-9.

2. Remove Outer Cover.

- See Section 7-5 “Common - Remove Outer Cover” on page 7-10.

3. Position the instrument so that it is right-side up, RF deck down.

4. Remove Inner Top Cover.

- See Section 7-6 “Common - Remove Inner Cover” on page 7-13.

5. Add blocking under front of instrument.

6. Remove and set aside the Front Panel.

- To remove it, see:
  - Section 10-3 “Remove the Phase 1 Front Panel Assembly” on page 10-3
  - Section 10-4 “Remove the Phase 2 Front Panel Assembly” on page 10-11

7. Position the instrument upside down.

Remove the RF Deck

8. Loosen and remove the semi-rigid coaxial cables between the analog module assemblies and the RF Deck. Best practices recommend removing all cables completely from the two assemblies.

9. Remove the RF Deck.

- See Section 14-3 “Remove the RF Deck” on page 14-4.

10. Add the T3545 RF Deck Fixture to the RF Deck chassis.

- See Section B-2 “T3545 RF Deck Fixture” on page B-1.

Disconnect the A116/A117 Low Band Bridge Module

11. See Figure 15-4, "A116/A117 Low Band Bridge Module – ND70078 – 64016 – Detail" on page 15-12 above for the A116/A117 Low Band Bridge Module connector orientation.

Remove the A116/A117 Low Band Bridge Module JB/J3 Coaxial Cable

12. For the to-be-replaced A116/A117 Low Band Bridge Module, position the RF Deck upside down. Use a 5/16" torque wrench set to 8 lbf · in to loosen and then remove the semi-rigid coaxial cable connected to the A116/A117 Low Band Bridge Module JB/J3 connector.

Remove the A116/A117 Low Band Bridge Module JS/J2 Coaxial Cable

13. Position the RF Deck right side up. Use a 5/16" torque wrench set to 8 lbf · in to loosen and then remove the semi-rigid coaxial cable connected to the front-facing Low Band Bridge Module JS/J2 connector.

Disconnect the A115 Low Band Transfer Switch Module

14. Using two 5/16" end wrenches (a plain end wrench and a torque end wrench set to 8 lbf · in), loosen the RF connection between the to-be-replaced A116/A117 Low Band Bridge Module and the A115 Low Band Transfer Switch Module.

Remove the A116/A117 Low Band Bridge Module

15. Remove the RF connection between the A115 Low Band Transfer Switch Module and the A116/A117 Low Band Bridge Module.

16. Remove the A116/A117 Low Band Bridge Module from the chassis.

Prepare the Replacement A116/A117 Low Band Bridge Module

17. Remove any protective covers from the replacement A116/A117 Low Band Bridge Module.

Install the A116/A117 Low Band Bridge Module

18. Place the A116/A117 Low Band Bridge Module into position in the chassis and carefully align and thread the RF connectors between the Low Band Bridge Module and the A115 Low Band Transfer Switch.

19. Torque the RF connection to 8 lbf · in.

Connect the A116/A117 Low Band Bridge Module JS/J2 Coaxial Cable

20. Position the RF Deck right side up. Carefully align and thread the semi-rigid coaxial cable connector on to the front-facing A116/A117 Low Band Bridge Module JS/J2 connector.

21. Torque the coaxial cable connection to 8 lbf · in.

Connect the A116/A117 Low Band Bridge Module JB/J3 Coaxial Cable

22. Position the RF Deck upside down. Carefully align and thread the semi-rigid coaxial cable connector into the bottom-side A116/A117 Low Band Bridge Module JB/J3 connector.

23. Torque the coaxial cable connection to 8 lbf · in.

Connect the A116/A117 Low Band Bridge Module P/J1 Coaxial Cable

24. Position the RF Deck right side up. Carefully align and thread the semi-rigid coaxial cable connector into the front-facing A116/A117 Low Band Bridge Module P/J1 connector.

25. Torque the coaxial cable connection to 8 lbf · in.

Check Connections

26. Check that all cable connections are correctly and fully inserted.

27. Check that all fastening hardware is installed and tight.

28. Check that all RF connections are correctly inserted, connected, and torqued.

Install RF Deck

29. Install the RF Deck into the instrument chassis.

- See Section 14-4 "Install the RF Deck" on page 14-12.

Install the Front Panel

30. Position the instrument right side up.

31. Apply blocking under the front of the instrument.

32. Install the Front Panel assembly.

- See Section 10-6 “Install the Phase 1 Front Panel Assembly” on page 10-19.

Completion Procedures

33. Install the Inner Cover.

- See Section 7-7 “Common - Install Inner Cover” on page 7-15.

34. Install the Outer Cover.

- See Section 7-8 “Common - Install Outer Cover” on page 7-16.

35. Tighten the four handle screws.

15-6 RF Deck Attenuator Overview

The table below provides a reference for all equipped instrument attenuators. Attenuators are located on the RF Deck on both the Top Side Chassis and in the Bottom Side Chassis. The attenuators are equipped if Option 061 or Option 062 is selected.

- See Chapter 13, "RF Deck Bottom Side Port Modules" and Section 13-15, "Option 061/062 - Port 2 b2/Port 1 b1 Attenuators - Removing" on page 13-37 and Section 13-16, "Option 061/062 - Attenuators - Preparing" on page 13-47.

For Option 061, two Low Band Attenuators are installed on the RF Deck Top Side and two High Band Attenuators are installed on the RF Deck Bottom Side.

For Option 062, four Low Band Attenuators are installed on the RF Deck Top Side and four High Band Attenuators on the RF Deck Bottom Side.

The Low Band Attenuators are the same part for either option and for any instrument model.

The High Band Attenuators are provided in a 40 GHz version for MS4642A / MS4644A VNAs and in a 70 GHz version for MS4645A / MS4647A VNAs.

Table 15-1. RF Deck - Attenuator Modules - Configuration Summary (1 of 2)

Model Number	Option	ERN Name RPN	RF Deck Side Mounting Location Cable Harness Orientation Bracket Orientation	A18 PCB Connection
Low Band Attenuators All Models	061 062	A125 Low Band Attenuator – Port 1 Source – ND70085 – 3-2000-1502	• RF Deck Top Side • Left Rear • Soldered-on harness to right • No required bracket orientation.	A18 PCB J15
		A127 Low Band Attenuator – Port 2 Test – ND70087 – 3-2000-1502	• RF Deck Top Side • Right Front • Soldered-on harness to right. • No required bracket orientation.	A18 PCB J14
	062	A124 Low Band Attenuator – Port 1 Test – ND70084 – 3-2000-1502	• RF Deck Top Side • Right Rear • Soldered-on harness to right. • No required bracket orientation.	A18 PCB J16
		A126 Low Band Attenuator – Port 2 Source – ND70086 – 3-2000-1502	• RF Deck Top Side • Left Front • Soldered-on harness to right. • No required bracket orientation.	A18 PCB J13

Table 15-1. RF Deck - Attenuator Modules - Configuration Summary (2 of 2)

Model Number	Option	ERN Name RPN	RF Deck Side Mounting Location Cable Harness Orientation Bracket Orientation	A18 PCB Connection
High Band Attenuators MS4642A MS4644A	061 062	A121 High Band Step Attenuator, 40 GHz – No ND – 66052	• RF Deck Bottom Side • Port 1 Source • Cable socket towards rear. • Bracket on right.	A18 PCB J1
		A123 High Band Step Attenuator, 40 GHz – No ND – 68570	• RF Deck Bottom Side • Port 2 b2 • Cable socket towards rear. • Bracket on right.	A18 PCB J4
	062	A120 High Band Step Attenuator, Test, Port 1 b1, 40 GHz – No ND – 68570	• RF Deck Bottom Side • Port 1 b1 • Cable socket towards rear. • Bracket on left.	A18 PCB J2
		A122 High Band Step Attenuator, 40 GHz – No ND – 66052	• RF Deck Bottom Side • Port 2 Source • Cable socket towards rear. • Bracket on left.	A18 PCB J3
High Band Attenuators MS4645A MS4647A	061 062	A121 High Band Step Attenuator, 70 GHz – No ND – 66050	• RF Deck Bottom Side • Port 1 Source • Cable socket towards rear. • Bracket on right.	A18 PCB J1
		A123 High Band Step Attenuator, 70 GHz – No ND – 66050	• RF Deck Bottom Side • Port 2 b2 • Cable socket towards rear. • Bracket on right.	A18 PCB J4
	062	A120 High Band Step Attenuator, Test, Port 1 b1, 40 GHz – No ND – 68570	• RF Deck Bottom Side • Port 1 b1 • Cable socket towards rear. • Bracket on left.	A18 PCB J2
		A122 High Band Step Attenuator, Port 2 Source, 70 GHz – No ND – 66050	• RF Deck Bottom Side • Port 2 Source • Cable socket towards rear. • Bracket on left.	A18 PCB J3

15-7 Replace the Low Band Source Attenuator

Use this procedure to replace the RF Deck Top Side A124, A125, A126, or A127 Low Band Attenuators. In general, the only reason to remove a Low Band Attenuator is to replace it. The removal and installation procedure for each module is the same.

For instruments equipped with Option 061, the RF Deck Top Side configuration is shown below in:

- Figure 15-5, “RF Deck Top Side Modules – Option 061 – Loops & Two Attenuators” on page 15-19.

For instruments equipped with Option 062, the RF Deck Top Side configuration is shown below in:

- Figure 15-6, “RF Deck Top Side Modules – Option 062 – Loops & Four Attenuators” on page 15-20.

Identification - Option 061 Low Band Attenuators - RF Deck Top Side

As shown in Figure 15-5 below, only the A125 and A127 attenuators are installed on instruments with Option 061.

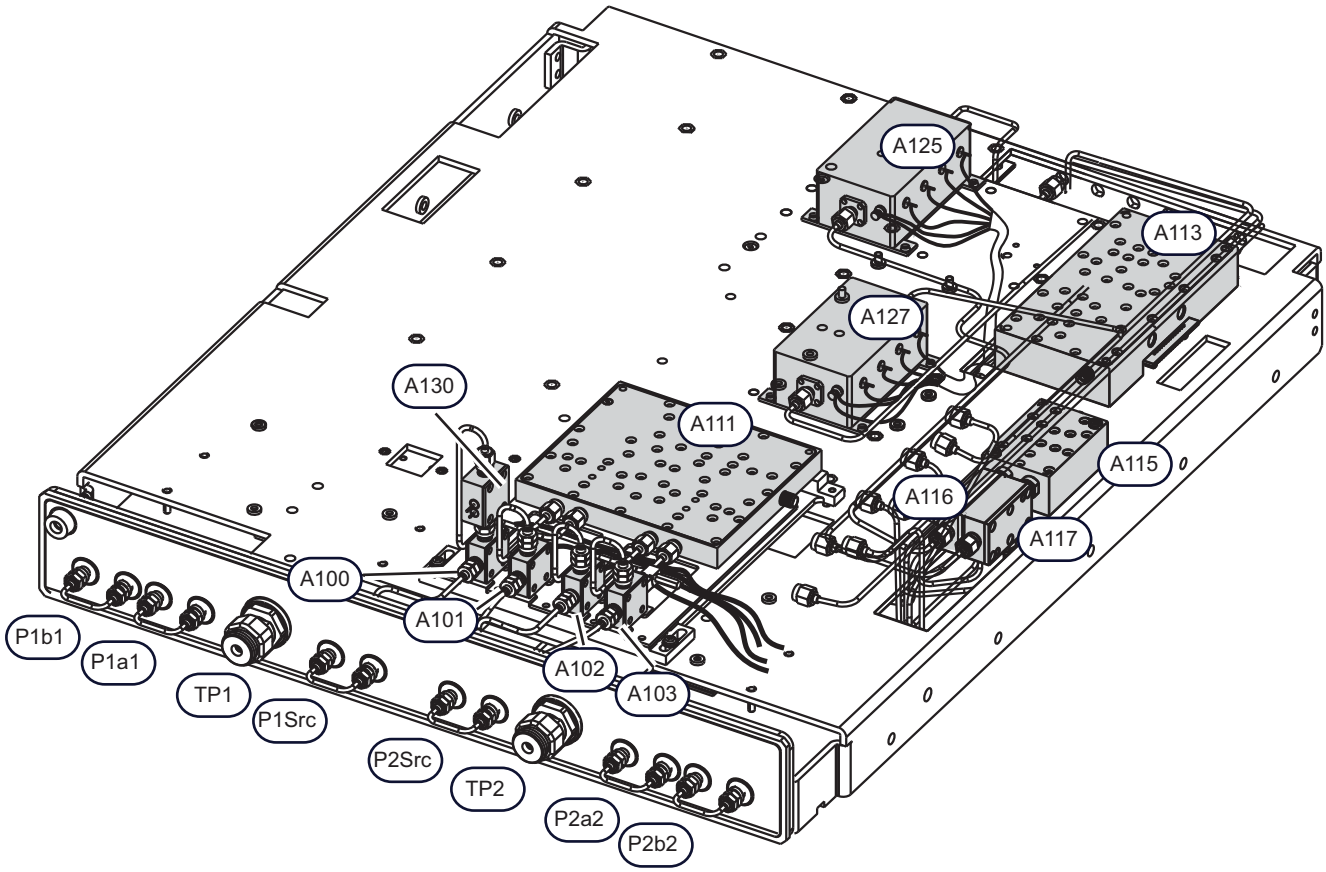

Low Band Attenuators

- A125 – Low Band Port 1 Source (P1 Src) Attenuator – ND70084 – 3-2000-1502
- A127 – Low Band Port 2 Test (P2 b2) Attenuator – ND70087 – 3-2000-1502

Right Side Modules

- A113 – 5-20 GHz Doubler Module – ND70080 – 64920
- A115 – Low Band Transfer Switch – ND70079 – 64690
- A116 – Low Band Bridge Module – ND70078 – 64016 – Inner Module
- A117 – Low Band Bridge Module – ND70078 – 64016 – Outer Module

SLODM Assembly

The Sampler/LO Distribution Module (SLODM) Assembly consists of the following components:

- A111 – LO Distribution Module Assembly – ND70081 – 62084
- A100 – Sampler Module – ND70082 – 64180
  - The A100, A101, A102, and A103 mount in sockets on the A111.
- A101 – Sampler Module – ND70082 – 64180
- A102 – Sampler Module – ND70082 – 64180
- A103 – Sampler Module – ND70082 – 64180
- A130 – LO Coupler Module – ND70083 – 68848
  - If present, mounts on top of either the A11 or A101 Sampler Module.

Front Panel Ports

- P1 b1, P1 a1, TP1, and P1 Src – Front Panel test ports for Port 1.
- P2 Src, TP2, P2 a2, and P2 b2 – Front Panel test ports for Port 2.

Figure 15-5. RF Deck Top Side Modules – Option 061 – Loops & Two Attenuators

Identification - Option 062 Low Band Attenuators - RF Deck Top Side

As shown in Figure 15-6 below, on instruments equipped with Option 062, all four attenuators are installed.

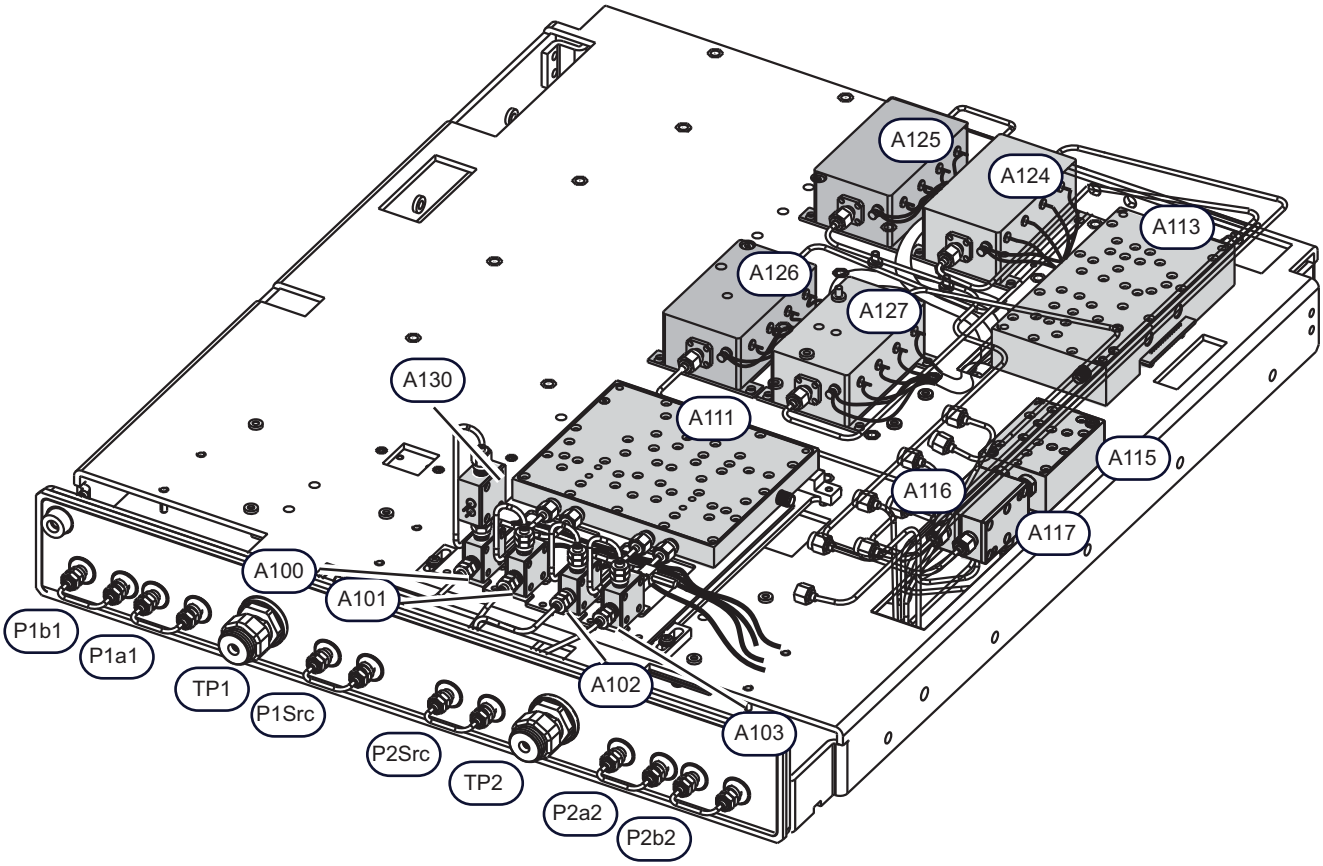

Low Band Attenuators

- A124 Low Band Port 1 Test (P1 b1) Attenuator – ND70085 – 3-2000-1502
- A125 Low Band Port 1 Source (P1 Src) Attenuator – ND70084 – 3-2000-1502
- A126 Low Band Port 2 Source (P2 Src) Attenuator – ND70086 – 3-2000-1502
- A127 Low Band Port 2 Test (P2 b2) Attenuator – ND70087 – 3-2000-1502

Right Side Modules

- A113 5-20 GHz Doubler Module – ND70080 – 64920
- A115 Low Band Transfer Switch – ND70079 – 64690
- A116 Low Band Bridge Module – ND70078 – 64016 – Inner Module
- A117 Low Band Bridge Module – ND70078 – 64016 – Outer Module

Sampler/LO Distribution Module Assembly

The Sampler/LO Distribution Module Assembly consists of the following six (6) components:

- A111 LO Distribution Module Assembly – ND70081 – 62084 or ND73193 – 72440
- A100 Sampler Module – ND70082 – 64180 – The A100-A103 mount in sockets on the A111.
- A101 Sampler Module – ND70082 – 64180
- A102 Sampler Module – ND70082 – 64180
- A103 Sampler Module – ND70082 – 64180
- A130 LO Coupler Module – ND70083 – 68848 – If present, mounts on top of the A100 or A101.
- A131 LO Coupler Module – No ND – 70685 – If present, mounts on top of the A101.
- A132 LO Coupler Module – No ND – 70685 – If present, mounts on top of the A103.

Front Panel Ports

- Port 1 Test Ports – P1 b1, P1 a1, TP1, and P1 Src
- Port 2 Test Ports – P2 Src, TP2, P2 a2, and P2 b2

Figure 15-6. RF Deck Top Side Modules – Option 062 – Loops & Four Attenuators

Parts and Applicability

The Low Band Attenuators are only on instruments equipped with Option 061 (two attenuators) or Option 062 (four attenuators). The replacement ND part number changes depending on the option and the installed location. All attenuators are the same physical/electrical unit and the same Anritsu Part Number 3-2000-1502.

For instruments with Option 061 - Front Loops and Two Attenuators:

- A127 Low Band Port 2 Test (Port 2 b2) Attenuator – ND70087 – 3-2000-1502
  - Location: Near right
  - Signal/Power Cable: Soldered-on, routed to A18 RF Control PCB Assembly connector J16
- A125 Low Band Port 1 Source (Port 1 Source) Attenuator – ND70084 – 3-2000-1502
  - Location: Far left
  - Signal/Power Cable: Soldered-on, routed to A18 RF Control PCB Assembly connector J13

For instruments with Option 062 - Front Loops and Four Attenuators:

- A127 Low Band Port 2 Test (Port 2 b2) Attenuator – ND70087 – 3-2000-1502
  - Location: Near right
  - Signal/Power Cable: Soldered-on, routed to A18 RF Control PCB Assembly connector J16
- A126 Low Band Port 2 Source (Port 2 Source) Attenuator – ND70086 – 3-2000-1502
  - Location: Near left
  - Signal/Power Cable: Soldered-on, routed to A18 RF Control PCB Assembly connector J15
- A125 Low Band Port 1 Source (Port 1 Source) Attenuator – ND70084 – 3-2000-1502
  - Location: Far left
  - Signal/Power Cable: Soldered-on, routed to A18 RF Control PCB Assembly connector J13
- A124 Low Band Port 1 Test (Port 1 b1) Attenuator – ND70085 – 3-2000-1502
  - Location: Far right
  - Signal/Power Cable: Soldered-on, routed to A18 RF Control PCB Assembly connector J14

Procedure

Common Procedures

1. Prepare work area, work surface, and observe safety issues.
   - See Section 7-4 “Common - Prepare Work Area and Safety” on page 7-9.
2. Remove Outer Cover.
   - See Section 7-5 “Common - Remove Outer Cover” on page 7-10.
3. Position the instrument so that it is right-side up, RF deck down.
4. Remove Inner Top Cover.
   - See Section 7-6 “Common - Remove Inner Cover” on page 7-13.
5. Add blocking under front of instrument.

Remove the Front Panel

6. Remove and set aside the Front Panel.
   - To remove it, see:
     - Section 10-3 “Remove the Phase 1 Front Panel Assembly” on page 10-3
     - Section 10-4 “Remove the Phase 2 Front Panel Assembly” on page 10-11
7. Position the instrument upside down.

Remove the RF Deck

8. Remove the RF Deck.
   - See Section 14-3 “Remove the RF Deck” on page 14-4.
9. Add two (2) T3545 RF Deck Fixtures to the RF Deck chassis.
   - See Section B-2 “T3545 RF Deck Fixture” on page B-1.

Identify Attenuator Location

10. Identify the location of the to-be-replaced Low Band Source Attenuator.
    - See Figure 15-5, “RF Deck Top Side Modules – Option 061 – Loops & Two Attenuators” on page 15-19 above.
    - See Figure 15-6, “RF Deck Top Side Modules – Option 062 – Loops & Four Attenuators” on page 15-20 above.

Disconnect Signal/Power Cable

11. From the RF Deck Bottom Side, on the A18 RF Control PCB Assembly, disconnect the attenuator cable. The A18 RF Control PCB Assembly connector varies depending on the attenuator being removed:
    - A124 Attenuator – ND70085 – 3-2000-1502 – Option 062 – A18 PCB J14
    - A125 Attenuator – ND70084 – 3-2000-1502 – Option 061 or 062 – A18 PCB J12
    - A126 Attenuator – ND70086 – 3-2000-1502 – Option 062 – A18 PCB J15
    - A127 Attenuator – ND70087 – 3-2000-1502 – Option 061 or 062 – A18 PCB J16

Disconnect Coaxial Cables

12. Use a 5/16” torque wrench set to 8 lbf · in to loosen the Low Band attenuator J1 input and J2 output semi-rigid coaxial cables. Once loose, use finger pressure to remove each connection and bend away the coaxial cables.

Remove the Attenuator/Bracket Assembly

13. Remove the complete attenuator/bracket assembly as shown in Figure 15-7 on page 15-23 below. All four attenuators are mechanically and electrically the same.

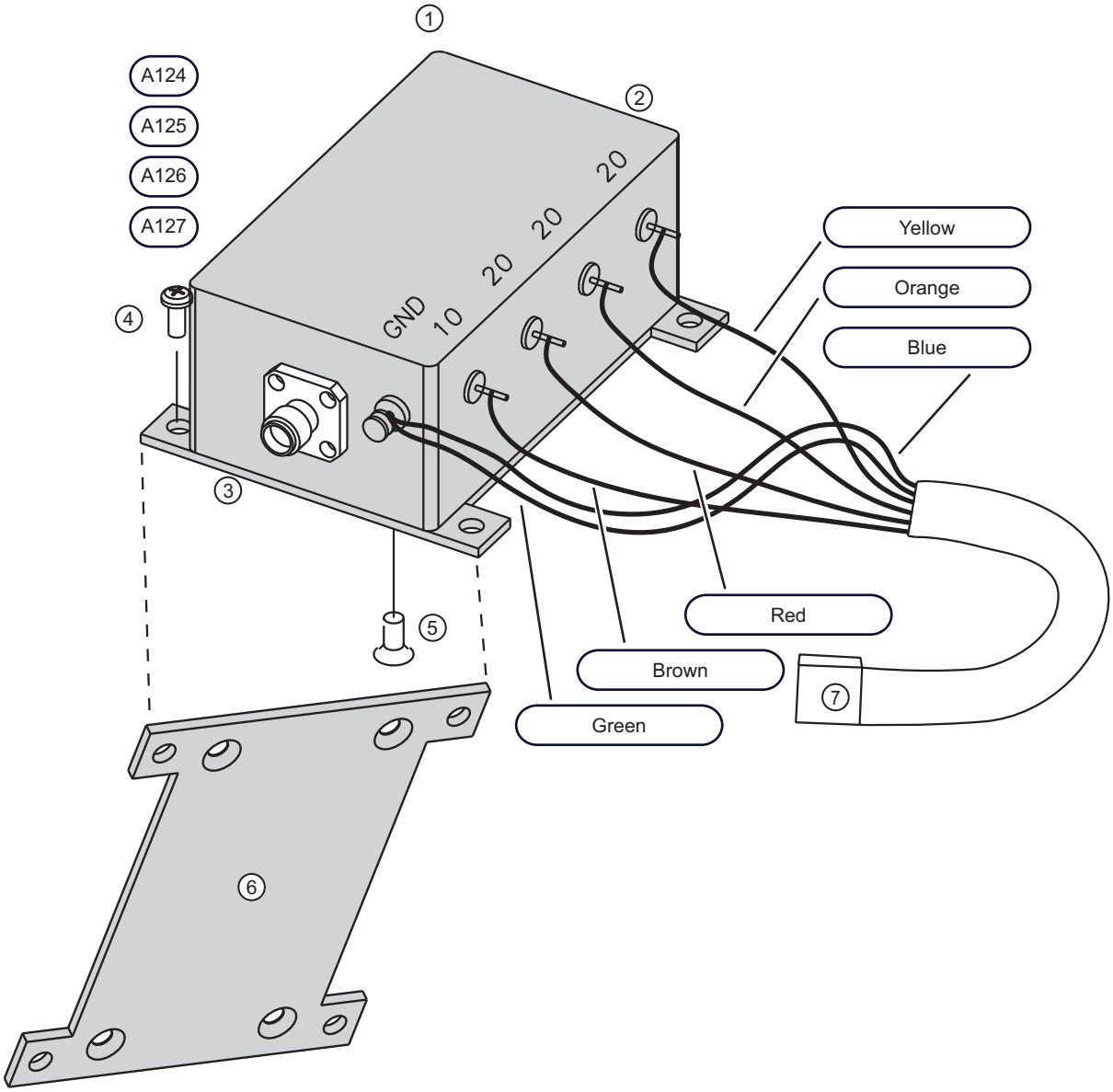

Figure 15-7. Low Band Step Attenuator, Bracket, and Harness Assembly (1 of 2)

Attenuator Module	Attenuator Hardware and Harness
1. Low Band DC to 2500 MHz Programmable Step Attenuator Assembly: • A124 Attenuator – ND70085 – 3-2000-1502 – Option 062 – A18 PCB J14 • A125 Attenuator – ND70084 – 3-2000-1502 – Option 061/062 – A18 PCB J12 • A126 Attenuator – ND70086 – 3-2000-1502 – Option 062 – A18 PCB J15 • A127 Attenuator – ND70087 – 3-2000-1502 – Option 061, 062 – A18 PCB J16	The bracket and related hardware must be transferred to the replacement attenuator. The replacement attenuator is equipped with a soldered-on harness. 4. Four (4) pan head Phillips M3 × 8 mm screws holding attenuator/bracket assembly to RF Deck chassis. 5. Four (4) flat head Phillips 4×40 × 0.187” screws holding bracket to attenuator. 6. Attenuator mounting bracket PN 3-61954. Not a component of the replacement part. 7. Attenuator soldered-on signal/power harness and connector routed to bottom side A18 PCB connector.
Attenuator Connectors 2. Attenuator J1 Input SMA (f) Connector 3. Attenuator J2 Output SMA (f) Connector	

Figure 15-7. Low Band Step Attenuator, Bracket, and Harness Assembly (2 of 2)

14. From the RF Deck Top Side, remove the four (4) pan head Phillips M3 × 8 mm screws that hold the attenuator/bracket assembly in place.

15. Lift the Attenuator out of the chassis, carefully routing the disconnected signal/power cable through the chassis opening.

Prepare the Replacement Attenuator

16. Remove the attenuator bracket from the to-be-replaced attenuator by removing the four (4) flat head Phillips 4×40 × 0.187” mounting screws.

17. Attach the attenuator bracket to the new attenuator by using the four screws above.

Install the Replacement Attenuator

18. Place the replacement attenuator assembly on the RF Deck Top Side chassis and fasten in place using four (4) pan head Phillips M3 × 8 mm screws.

Route and Connect the Signal/Power Cable

19. Route the signal/power cable through the RF Deck chassis towards the bottom side A18 PCB.

20. Connect the cable to the A18 PCB connector:

- A124 Attenuator – ND70085 – 3-2000-1502 – Option 062 – A18 PCB J14
- A125 Attenuator – ND70084 – 3-2000-1502 – Option 061 or 062 – A18 PCB J12
- A126 Attenuator – ND70086 – 3-2000-1502 – Option 062 – A18 PCB J15
- A127 Attenuator – ND70087 – 3-2000-1502 – Option 061 or 062 – A18 PCB J16

Connect Semi-Rigid Coaxial Cables

21. On the RF Deck Top Side, connect the semi-rigid coaxial cable to the J1 input port by carefully aligning the connectors, making sure they are correctly threaded, and then tighten finger tight.

22. Repeat above for the coaxial cable connected to the J2 output port.

23. Torque both connections using a 5/16” torque end wrench set to 8 lbf · in.

Check Connections

24. Check to make sure that all fastening hardware is tight.

25. Check to make sure all A18 PCB connectors are correctly and fully inserted.

26. Check that all RF connections are correctly torqued.

Install the RF Deck

27. Install the RF Deck into the instrument chassis.

- See Section 14-4 “Install the RF Deck” on page 14-12.

Install the Front Panel

28. Position the instrument right side up.

29. Apply blocking under the front of the instrument.

30. Install the Front Panel assembly.

- See Section 10-6 “Install the Phase 1 Front Panel Assembly” on page 10-19.

Completion Procedures

31. Install the Inner Cover.

- See Section 7-7 “Common - Install Inner Cover” on page 7-15.

32. Install the Outer Cover.

- See Section 7-8 “Common - Install Outer Cover” on page 7-16.

33. Tighten the four handle screws.

15-8 SLODM Overview

Introduction to the SLODM Assembly

The Sampler/LO Distribution Module (SLODM) Assembly Part Number is for configuration purposes only and is not a replacement part.

The only reason to remove and disassemble the SLODM is to replace one or more of its modules. Other than differing cable connections, the removal and replace procedure for each variant is the same. For disassembly and assembly procedures, the procedures are similar but vary with module sequence and cable connections. The complete procedure consists of the following major steps:

- Removal
  - Remove any cables between the SLODM assembly and other components.
  - Remove the SLODM assembly from the RF Deck Top Side.
- Disassembly
  - If required to access a component, remove the appropriate SLODM semi-rigid coaxial cables.
  - If required to access a component, remove any modules mounted on top of the A100, A101, or A103 Sampler Modules.
  - If required to access the foundation A111 LO Distribution Module, remove all mounted components, and all connected semi-rigid coaxial cables.
  - Remove any fastening hardware as required to dismount components.
- Assembly
  - Exchange the to-be-replaced component with the replacement component.
  - If required, install the component mounting hardware and cables.
  - Make sure all SLODM assembly cables are correctly tightened and torqued.
- Replacement
  - Install the SLODM assembly on to the RF Deck Top Side.
  - Connect all cables between the SLODM, the RF Deck, and the Analog PCB assemblies.

SLODM Assembly Configuration Variants

There are five (5) configuration variants of the SLODM Assembly depending on the VNA serial number, Phase, and equipped options. Except for the A111, all SLODM components are replaced with same parts. For the A111, the early A111 LO Distribution Module – ND70081 – 66270 is obsolete and replaced by the newer A111 LO Distribution Module – ND73193 – 72440. In Table 15-2 below, the five (5) assembly variants are described. Figures showing each variant follow in this section.

Table 15-2. SLODM Assembly Component Variants (1 of 2)

Assy PN / Rev **VNA Model** **Options** **VNA S/N**	**A111 LO Distribution Module – ND70081 – 66270 or ND73193 – 66270** **Connector Position and Number** **Variant Reference Figure**			
	Left A111 J2	**Left Center A111 J3**	**Right Center A111 J4**	**Right A111 J5**
62084 B All Models Options Standard, 051, 061, or 062 VNAs with S/N 1051172 and below, except S/N 1034144	A130 LO Coupler Module – ND70083 – 68848 – On top of A100	—	—	—
	A100 Sampler Module – ND70082 – 64180	A101 Sampler Module – ND70082 – 64180	A102 Sampler Module – ND70082 – 64180	A103 Sampler Module – ND70082 – 64180
	A111 LO Distribution Module – ND70081 – 66270 • The A111 ND70081 is obsolete. • Replace with A111 LO Distribution Module – ND73193 – 66270, Cable ND73203 – 67355-12, and Cable 62111-1 which connects A100 top J2 to A111 left J2. • Remove the A130 LO Coupler Module – ND70083 – 68848 located on top of the A100 and do not reinstall. • Remove the semi-rigid coaxial cable connected from the A130 top J2 to A111 left J2 and do not reinstall. • Figure 15-8, “SLODM Assembly – 62084 B – Components” on page 15-29 • Figure 15-9, “SLODM Assembly – 62084 B – Exploded View” on page 15-31			
62084 C All Models Options Standard, 051, 061, or 062 VNAs with S/N 1034144, 1051173 and above to S/N 1120219	—	A130 LO Coupler Module – ND70083 – 68848 – On top of A101	—	—
	A100 Sampler Module – ND70082 – 64180	A101 Sampler Module – ND70082 – 64180	A102 Sampler Module – ND70082 – 64180	A103 Sampler Module – ND70082 – 64180
	A111 LO Distribution Module – ND70081 – 66270 • A111 ND70081 is obsolete. • Replace with A111 LO Distribution Module – ND73193 – 66270, Cable ND73203 – 67355-12, and Cable 62111-8 which connects A101 top J2 to A111 left center J3. • Remove the A130 LO Coupler Module – ND70083 – 68848 located on top of the A101 and do not reinstall. • Remove the semi-rigid coaxial cable connected from the A130 top J2 to A111 left center J2 and do not reinstall. • Figure 15-10, “SLODM Assembly – 62084 C – Components” on page 15-33			

Table 15-2. SLODM Assembly Component Variants (2 of 2)

Assy PN / Rev VNA Model Options VNA S/N	A111 LO Distribution Module – ND70081 – 66270 or ND73193 – 66270 Connector Position and Number Variant Reference Figure			
	Left A111 J2	**Left Center A111 J3**	**Right Center A111 J4**	**Right A111 J5**
73231 A MS4647A Option 080 or 081 VNAs with S/N 1120219 and below	A130 LO Coupler Module – ND70083 – 68848 – On top of A100	A131 LO Coupler Module – No ND – 70685 – On top of A101	—	A132 LO Coupler Module – No ND – 70685 – On top of A103
	A100 Sampler Module – ND70082 – 64180	A101 Sampler Module – ND70082 – 64180	A102 Sampler Module – ND70082 – 64180	A103 Sampler Module – ND70082 – 64180
	A111 LO Distribution Module – ND70081 – 66270 • The A111 ND70081 is obsolete. • Replace with A111 LO Distribution Module – ND73193 – 66270, Cable ND73203 – 67355-12, and Cable 62111-1 which connects A100 top J2 to A111 left J2. • Remove and do not reinstall A130 LO Coupler Module – ND70083 – 68848. • Remove and do not reinstall the semi-rigid coaxial connected from A130 top J2 to A111 left J2. • Figure 15-11, “SLODM Assembly – 73231 A – Components – MS4647A Option 080/081” on page 15-35			
62084 D All Models Options Standard, 051, 061, or 062 VNAs with S/N 1120220 and above	—	—	—	—
	A100 Sampler Module – ND70082 – 64180	A101 Sampler Module – ND70082 – 64180	A102 Sampler Module – ND70082 – 64180	A103 Sampler Module – ND70082 – 64180
	A111 LO Distribution Module – ND73193 – 66270 • No additional cables required. • A130 – ND70083 – 68848 is not used. • Figure 15-12, “SLODM Assembly – 62084 D – Components” on page 15-37			
73231 B MS4647A Option 080 or 081 VNAs with S/N 1120220 and above	—	A131 LO Coupler Module – No ND – 70685 – On top of A101	—	A132 LO Coupler Module – No ND – 70685 – On top of A103
	A100 Sampler Module – ND70082 – 64180	A101 Sampler Module – ND70082 – 64180	A102 Sampler Module – ND70082 – 64180	A103 Sampler Module – ND70082 – 64180
	A111 LO Distribution Module – ND73193 – 66270 • No additional cables required. • A130 – ND70083 – 68848 is not used. • Figure 15-13, “SLODM Assembly – 73231 B – Components – MS4647A Option 080/081” on page 15-39			

15-9 Identification of SLODM Assembly Variants

The figures below show the five (5) SLODM Assembly variants and their components.

SLODM Assembly – 62084 B – Components

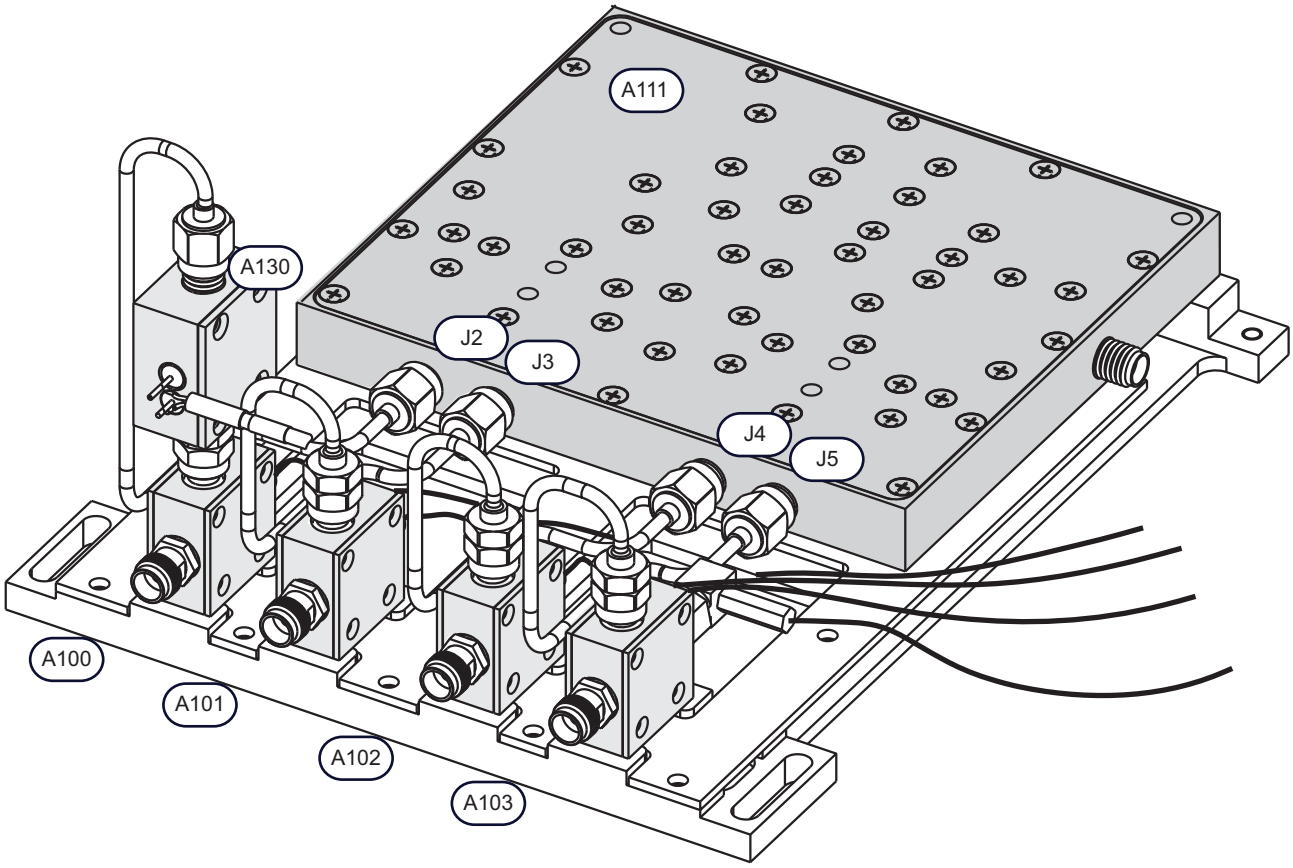

Figure 15-8. SLODM Assembly – 62084 B – Components (1 of 2)

SLODM Assembly – 62084 Revision B

For VNAs with S/N 1051172 and below, except S/N 1034144. The 62084 B SLODM assembly consists of the following six (6) components:

- A111 LO Distribution Module – ND70081 – 62084
- A100 Sampler Module – ND70082 – 64180
- A101 Sampler Module – ND70082 – 64180
- A102 Sampler Module – ND70082 – 64180
- A103 Sampler Module – ND70082 – 64180
- A130 LO Coupler Module – ND70083 – 68848 – Mounts on top of the A100.

A100-A103 Sampler Module Connectors

- J1 – Front
- J2 – Top
- J3 – Rear
- -5V Pin – Bottom Rear
- +5v Pin – Bottom Front
- Each Sampler Module is held to the A111 with two (2) pan head Phillips M2.5 × 10 mm screws.

A130 LO Coupler Module Connectors

- J1 – Top
- J2 – Bottom
- J3 – Front facing pin above J4
- J4 – Front facing pin below J3

A111 LO Distribution Module Assembly

- J1 – Right side towards rear
- J2 – Front facing left
- J3 – Front facing left center
- J4 – Front facing right center
- J5 – Front facing right
- Position 1 – 2-Pin Socket for A100 – At left
- Position 2 – 2-Pin Socket for A101 – At left center
- Position 3 – 2-Pin Socket for A102 – At right center
- Position 4 – 2-Pin Socket for A103 – At right

Figure 15-8. SLODM Assembly – 62084 B – Components (2 of 2)

SLODM Assembly – 62084 B – Exploded View

All SLODM Assembly variants are identical mechanically. Use the figure below as a guide to a SLODM disassembly and reassembly.

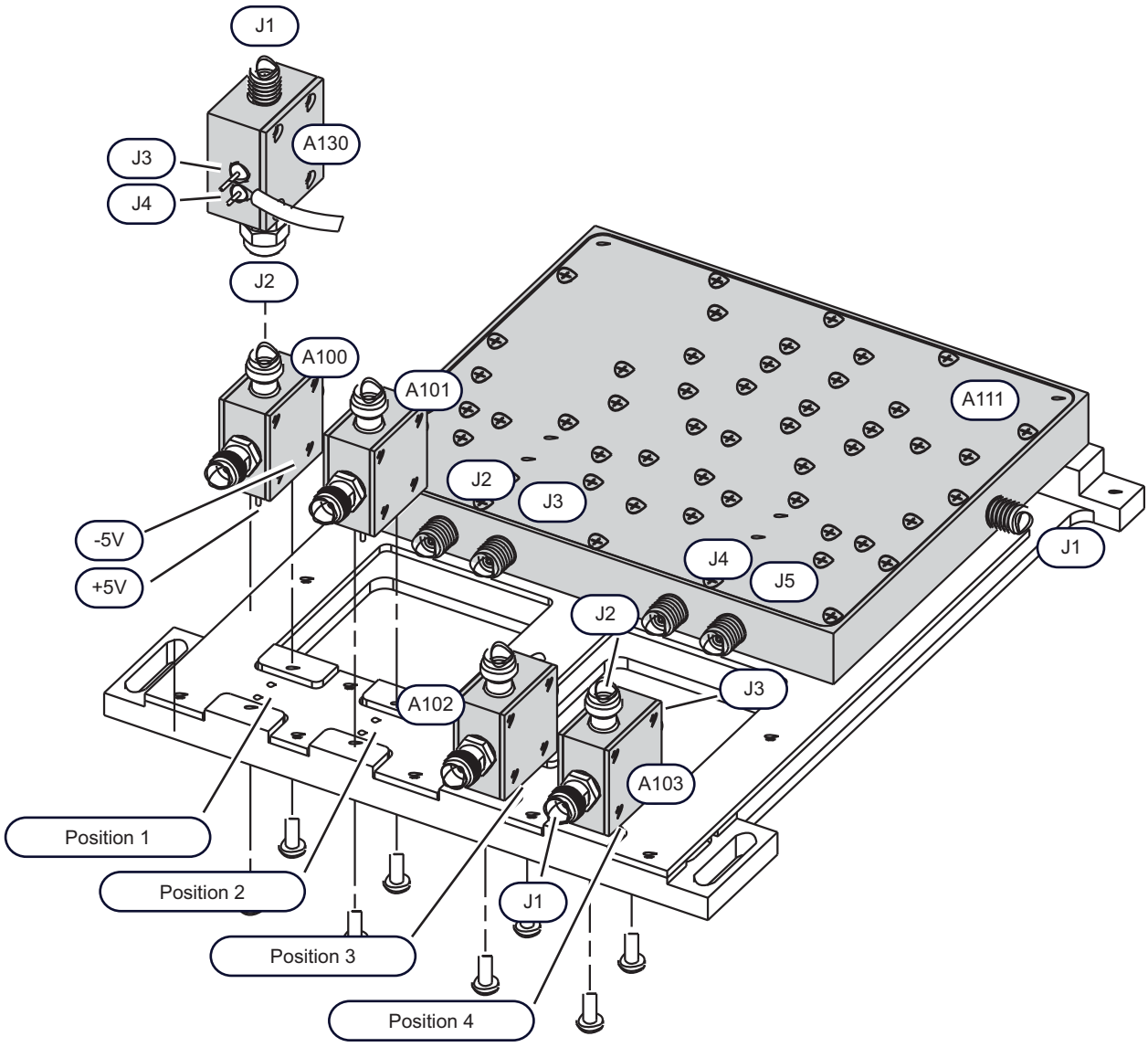

Figure 15-9. SLODM Assembly – 62084 B – Exploded View (1 of 2)

SLODM Assembly – 62084 Revision B

For VNAs with S/N 1051172 and below, except S/N 1034144. The 62084 B SLODM assembly consists of the following six (6) components:

- A111 LO Distribution Module – ND70081 – 62084
- A100 Sampler Module – ND70082 – 64180
- A101 Sampler Module – ND70082 – 64180
- A102 Sampler Module – ND70082 – 64180
- A103 Sampler Module – ND70082 – 64180
- A130 LO Coupler Module – ND70083 – 68848 – Mounts on top of the A100.

A100-A103 Sampler Module Connectors

- J1 – Front
- J2 – Top
- J3 – Rear
- -5V Pin – Bottom Rear
- +5v Pin – Bottom Front
- Each Sampler Module is held to the A111 with two (2) pan head Phillips M2.5 × 10 mm screws.

A130 LO Coupler Module Connectors

- J1 – Top
- J2 – Bottom
- J3 – Front facing pin above J4
- J4 – Front facing pin below J3

A111 LO Distribution Module Assembly

- J1 – Right side towards rear
- J2 – Front facing left
- J3 – Front facing left center
- J4 – Front facing right center
- J5 – Front facing right
- Position 1 – 2-Pin Socket for A100 – At left
- Position 2 – 2-Pin Socket for A101 – At left center
- Position 3 – 2-Pin Socket for A102 – At right center
- Position 4 – 2-Pin Socket for A103 – At right

Figure 15-9. SLODM Assembly – 62084 B – Exploded View (2 of 2)

SLODM Assembly – 62084 C – Components

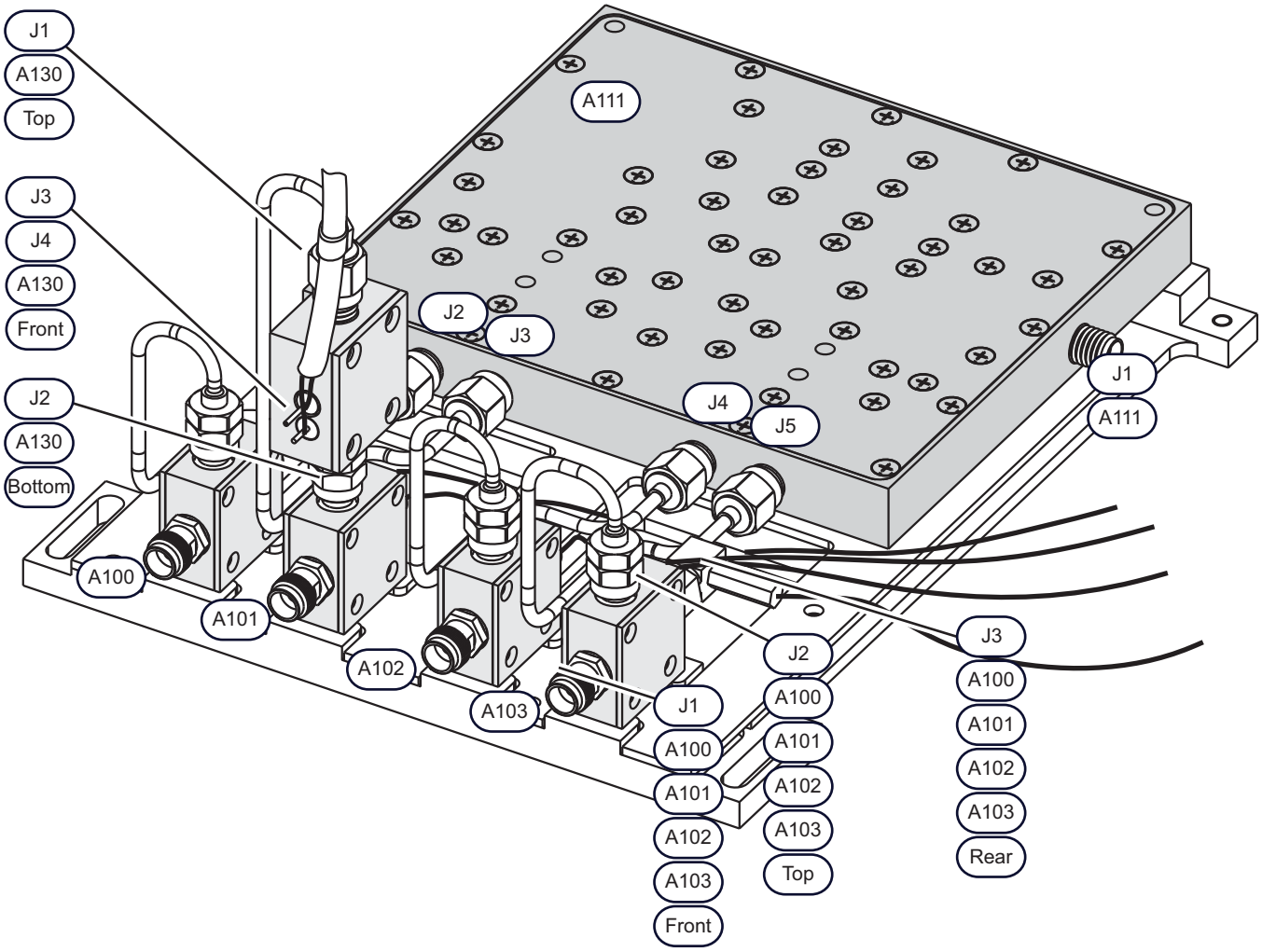

Figure 15-10. SLODM Assembly – 62084 C – Components (1 of 2)

SLODM Assembly – 62084 Revision C

For VNAs with S/N 1034144, S/N 1051173 and above to S/N 1120219 and above to S/N 1120219. The 62084 C SLODM assembly consists of the following six (6) components:

- A111 LO Distribution Module – ND70081 – 62084
- A100 Sampler Module – ND70082 – 64180
- A101 Sampler Module – ND70082 – 64180
- A102 Sampler Module – ND70082 – 64180
- A103 Sampler Module – ND70082 – 64180
- A130 LO Coupler Module – ND70083 – 68848 – Mounts on top of the A101.

A100-A103 Sampler Module Connectors

- J1 – Front
- J2 – Top
- J3 – Rear
- -5V Pin – Bottom Rear
- +5v Pin – Bottom Front
- Each Sampler Module is held to the A111 with two (2) pan head Phillips M2.5 × 10 mm screws.

A130 LO Coupler Module Connectors

- J1 – Top
- J2 – Bottom
- J3 – Front facing pin above J4
- J4 – Front facing pin below J3

A111 LO Distribution Module Assembly

- J1 – Right side towards rear
- J2 – Front facing left
- J3 – Front facing left center
- J4 – Front facing right center
- J5 – Front facing right
- Position 1 – 2-Pin Socket for A100 – At left
- Position 2 – 2-Pin Socket for A101 – At left center
- Position 3 – 2-Pin Socket for A102 – At right center
- Position 4 – 2-Pin Socket for A103 – At right

Figure 15-10. SLODM Assembly – 62084 C – Components (2 of 2)

SLODM Assembly – 73231 A – Components

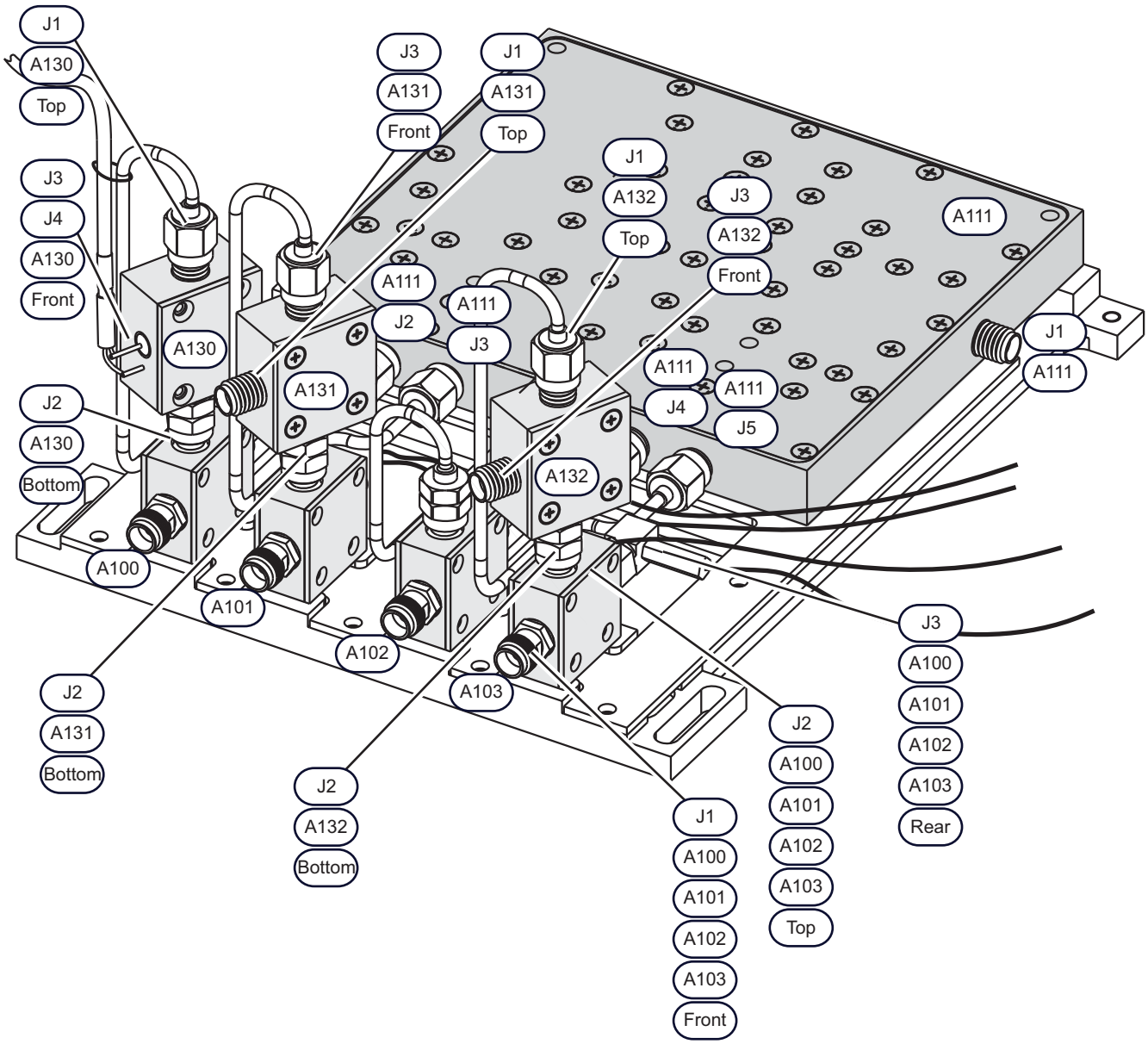

Figure 15-11. SLODM Assembly – 73231 A – Components – MS4647A Option 080/081 (1 of 2)

SLODM Assembly – 73231 Revision A

For MS4647A VNAs equipped with Option 080/081 and S/N 1120219 and lower. The 73231 A SLODM assembly consists of the following eight (8) components:

- A111 LO Distribution Module – ND70081 – 62084
- A100 Sampler Module – ND70082 – 64180
- A101 Sampler Module – ND70082 – 64180
- A102 Sampler Module – ND70082 – 64180
- A103 Sampler Module – ND70082 – 64180
- A130 LO Coupler Module – ND70083 – 68848 – Mounts on top of the A100.
- A131 LO Coupler Module – No ND – 70685 – Mounts on top of the A101.
- A132 LO Coupler Module – No ND – 70685 – Mounts on top of the A103.

A100-A103 Sampler Module Connectors

- J1 – Front
- J2 – Top
- J3 – Rear
- -5V Pin – Bottom Rear
- +5v Pin – Bottom Front
- Each Sampler Module is held to the A111 with two (2) pan head Phillips M2.5 × 10 mm screws.

A130 LO Coupler Module Connectors

- J1 – Top
- J2 – Bottom
- J3 – Front facing pin above J4
- J4 – Front facing pin below J3

A131-A132 LO Coupler Module Connectors

- J1 – Top
- J2 – Bottom
- J3 – Front

A111 LO Distribution Module Assembly

- J1 – Right side towards rear
- J2 – Front facing left
- J3 – Front facing left center
- J4 – Front facing right center
- J5 – Front facing right
- Position 1 – 2-Pin Socket for A100 – At left
- Position 2 – 2-Pin Socket for A101 – At left center
- Position 3 – 2-Pin Socket for A102 – At right center
- Position 4 – 2-Pin Socket for A103 – At right

Figure 15-11. SLODM Assembly – 73231 A – Components – MS4647A Option 080/081 (2 of 2)

SLODM Assembly – 62084 D – Components

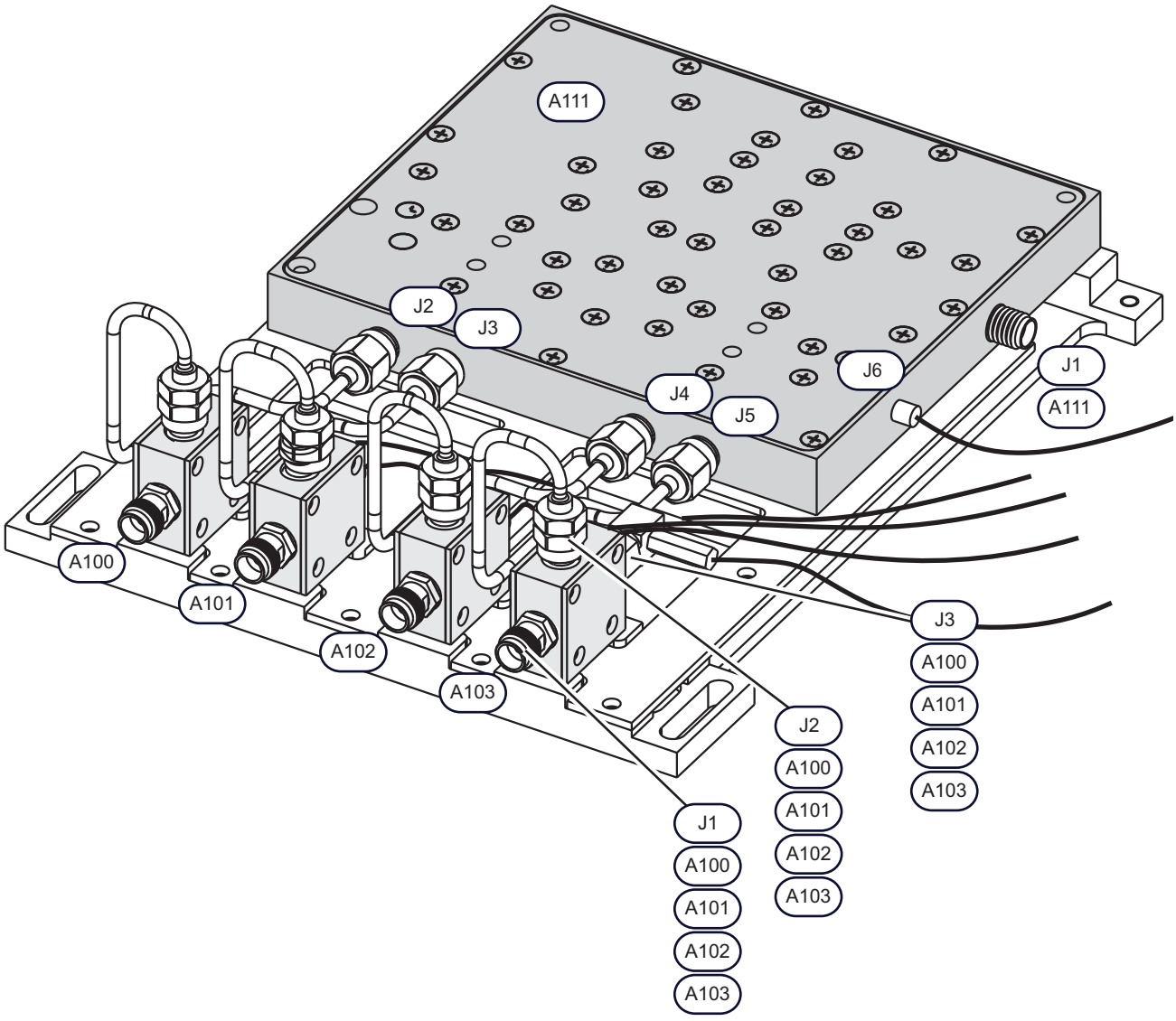

Figure 15-12. SLODM Assembly – 62084 D – Components (1 of 2)

SLODM Assembly – 62084 Revision D	A111 LO Distribution Module Assembly
For VNAs with S/N 1120220 and higher, the 62084 D SLODM assembly consists of the following five (5) components: • A111 LO Distribution Module – ND73193 – 72440 • A100 Sampler Module – ND70082 – 64180 • A101 Sampler Module – ND70082 – 64180 • A102 Sampler Module – ND70082 – 64180 • A103 Sampler Module – ND70082 – 64180 **A100-A103 Sampler Module Connectors** • J1 – Front • J2 – Top • J3 – Rear • -5V Pin – Bottom Rear • +5v Pin – Bottom Front • Each Sampler Module is held to the A111 with two (2) pan head Phillips M2.5 × 10 mm screws.	The following connectors are located on the A111 LO Distribution Module Assembly – ND73193 – 72440: • J1 – Right side towards rear • J2 – Front facing left • J3 – Front facing left center • J4 – Front facing right center • J5 – Front facing right • J6 – Right side towards front • Position 1 – 2-Pin Socket for A100 – At left • Position 2 – 2-Pin Socket for A101 – At left center • Position 3 – 2-Pin Socket for A102 – At right center • Position 4 – 2-Pin Socket for A103 – At right

Figure 15-12. SLODM Assembly – 62084 D – Components (2 of 2)

SLODM Assembly – 73231 B – Components

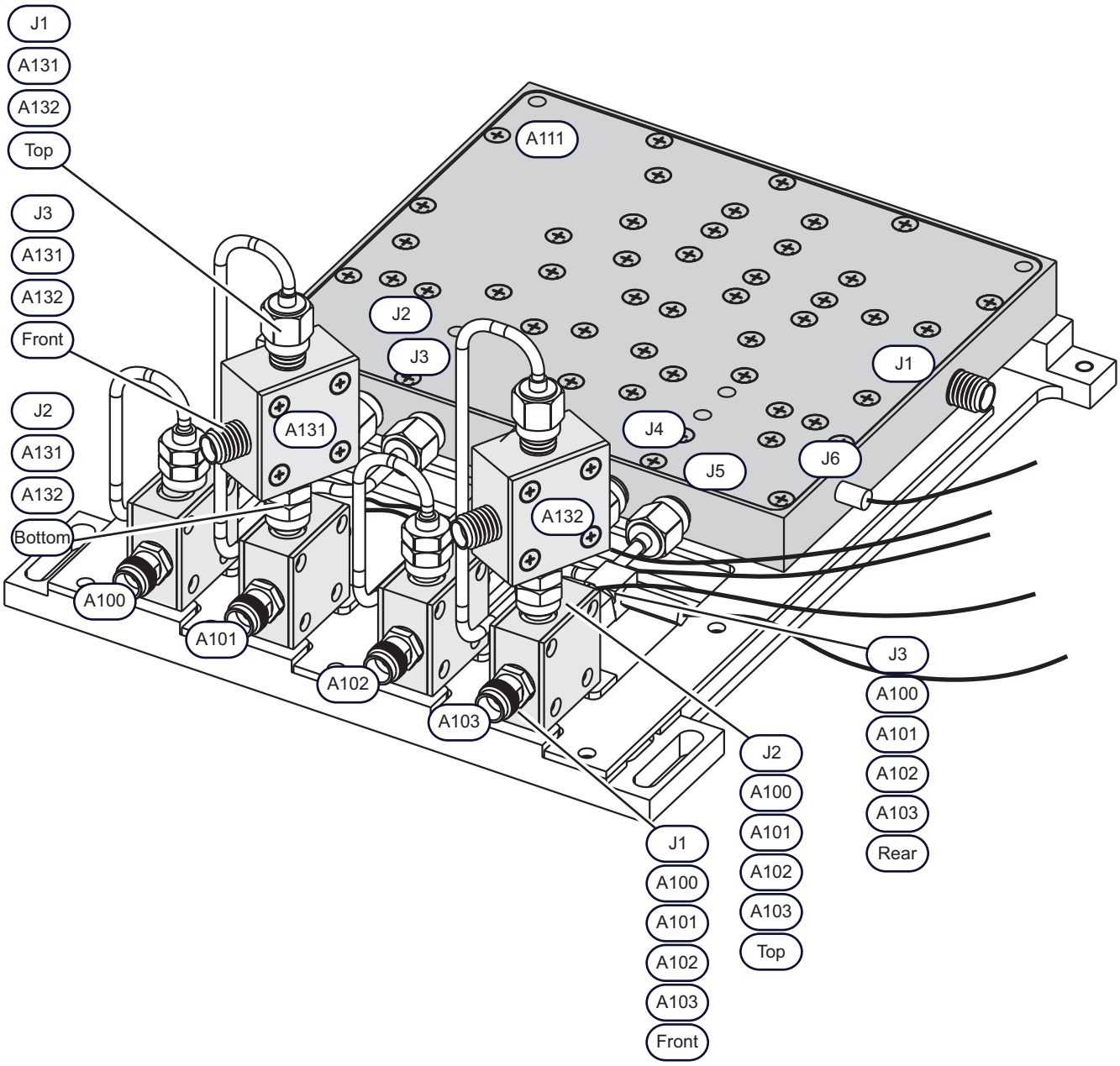

Figure 15-13. SLODM Assembly – 73231 B – Components – MS4647A Option 080/081 (1 of 2)

SLODM Assembly – 73231 Revision B

For MS4647A VNAs equipped with Option 080/081 and S/N 1120220 and higher. The 73231 B SLODM assembly consists of the following eight (8) components:

- A111 LO Distribution Module – ND73193 – 72440
- A100 Sampler Module – ND70082 – 64180
- A101 Sampler Module – ND70082 – 64180
- A102 Sampler Module – ND70082 – 64180
- A103 Sampler Module – ND70082 – 64180
- A131 LO Coupler Module – No ND – 70685 – Mounts on top of the A101.
- A132 LO Coupler Module – No ND – 70685 – Mounts on top of the A103.

A100-A103 Sampler Module Connectors

- J1 – Front
- J2 – Top
- J3 – Rear
- -5V Pin – Bottom Rear
- +5v Pin – Bottom Front
- Each Sampler Module is held to the A111 with two (2) pan head Phillips M2.5 × 10 mm screws.

A131-A132 LO Coupler Module Connectors

- J1 – Top
- J2 – Bottom
- J3 – Front

A111 LO Distribution Module Assembly

- J1 – Right side towards rear
- J2 – Front facing left
- J3 – Front facing left center
- J4 – Front facing right center
- J5 – Front facing right
- J6 – Right side towards front
- Position 1 – 2-Pin Socket for A100 – At left
- Position 2 – 2-Pin Socket for A101 – At left center
- Position 3 – 2-Pin Socket for A102 – At right center
- Position 4 – 2-Pin Socket for A103 – At right

Figure 15-13. SLODM Assembly – 73231 B – Components – MS4647A Option 080/081 (2 of 2)

15-10 Remove the Sampler/LO Distribution Module Assembly

Use this procedure to remove the Sampler/LO Distribution Module (SLODM) Assembly. The assembly itself is not a replaceable part, but consists of multiple components which are replaceable parts. This general removal procedure is the same for any VNA Phase, any model, with any combination of options.

Parts and Applicability

- The SLODM Assembly is used on all instrument model numbers with any combination of options.
- The assembly is not a replaceable part.
- The assembly consists of multiple components each of which is a replaceable part.
  - See Table 15-2, "SLODM Assembly Component Variants" on page 15-27 above for a listing of each variant and its component modules.
- The Front Panel and the RF Deck must be removed from the instrument and then the SLODM Assembly must be removed from the RF Deck chassis to service its components.

Procedure

Common Procedures

1. Prepare work area, work surface, and observe safety issues.
   - See Section 7-4 "Common - Prepare Work Area and Safety" on page 7-9.
2. Remove Outer Cover.
   - See Section 7-5 "Common - Remove Outer Cover" on page 7-10.
3. Position the instrument so that it is right-side up, RF deck down.
4. Remove Inner Top Cover.
   - See Section 7-6 "Common - Remove Inner Cover" on page 7-13.
5. Add blocking under front of instrument.
6. Remove and set aside the Front Panel.
   - To remove it, see:
     - Section 10-3 "Remove the Phase 1 Front Panel Assembly" on page 10-3
     - Section 10-4 "Remove the Phase 2 Front Panel Assembly" on page 10-11
7. Position the instrument upside down.

Remove the RF Deck

8. Loosen and remove the semi-rigid coaxial cables between the analog module assemblies and the RF Deck. Best practices recommend removing all cables between the two assemblies.
9. Loosen and remove the MCX coaxial cables between the analog module assemblies and the RF Deck. Identify and remove any remaining connections between SLODM and the RF Deck. Best practices recommend removing all cables between the two assemblies.
10. Remove the RF Deck.
    - See Section 14-3 "Remove the RF Deck" on page 14-4.
11. Add two (2) T3545 RF Deck Fixtures to the RF Deck chassis.
    - See Section B-2 "T3545 RF Deck Fixture" on page B-1.

Disconnect the A18 J4 Ribbon Cable

12. Place the RF Deck upside down.
13. On the RF Deck Bottom Side, locate the SLODM ribbon cable connected to the A18 RF Control PCB Assembly at connector J4.
14. Disconnect the cable at A18 RF Control PCB Assembly J4.

15. Remove the SLODM Assembly while carefully feeding the ribbon cable through from the RF Deck Bottom Side to the Top Side.

16. As shown in Figure 15-14 below, the SLODM Assembly is held in place two screws from the RF Deck Bottom Side and two screws from the RF Deck Top Side.

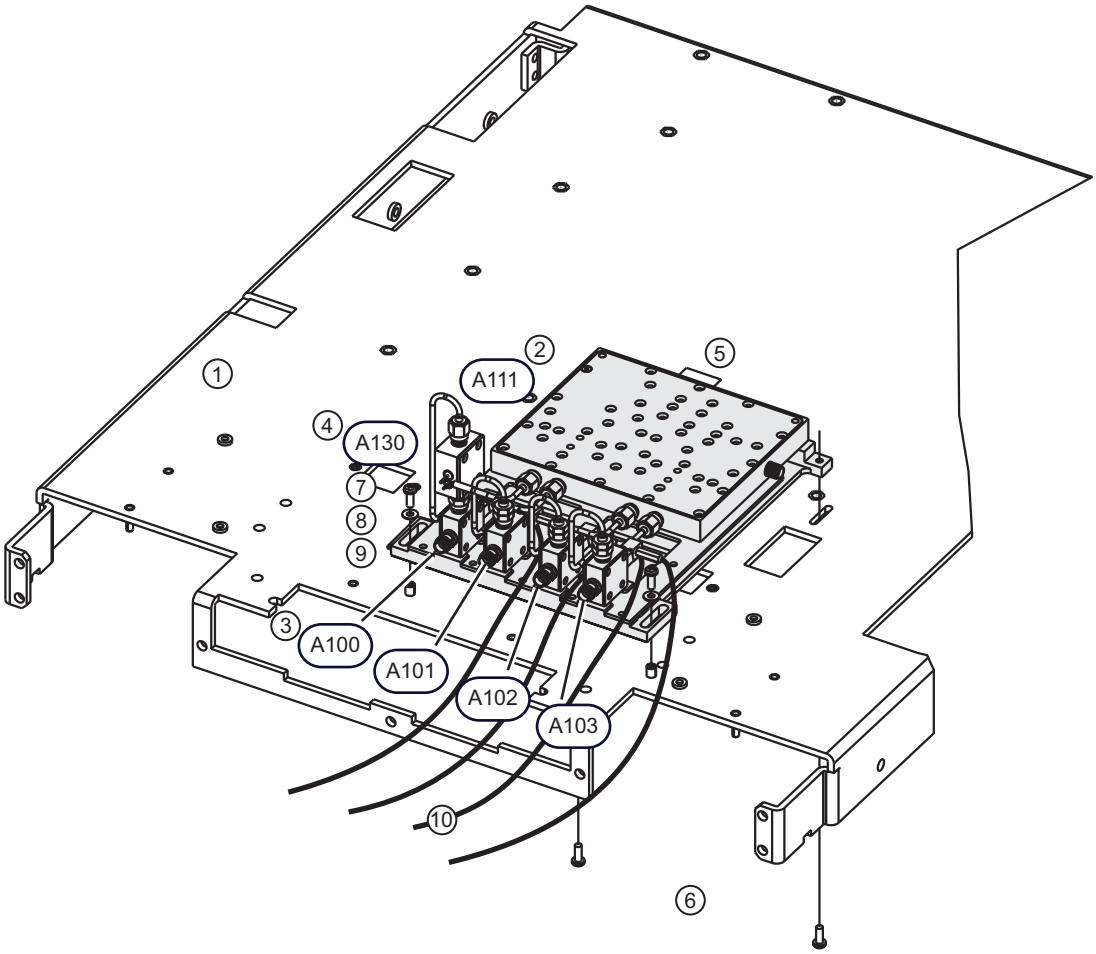

Figure 15-14. SLODM Assembly (1 of 2)and RF Deck Disassembly/Assembly

Orientation	RF Deck Bottom Side
Phase 1 VNA SLODM Assembly shown. Mechanically, all SLODM Assemblies are identical. RF Deck Top Side viewed from front panel. **Removals** 1. RF Deck Top Side removed from instrument chassis. The RF Deck front panel removed for clarity. **SLODM Assembly** 2. A111 LO Distribution Module Assembly provides mounting for the rest of the components which vary depending on the instrument serial number, model, and equipped options. 3. A100, A101, A102, and A103 Sampler Modules – Mounted into sockets on A111 LO Distribution Module Assembly. 4. A130, A131, A132 LO Coupler Modules – If present, mounted on top of the Sampler Modules. Presence, location, and part number varies with instrument model, S/N, Phase, and equipped options.	5. Ribbon cable between the A111 LO Distribution Module Assembly and the bottom side A18 RF Control PCB Assembly J4 connector. 6. From the bottom side, two (2) pan head Phillips M3 × 8 mm screws. **RF Deck Top Side** 7. From the top side, two (2) pan head Phillips M3 × 8 mm screws. 8. Two (2) flat #6 washers under the M3 × 8 mm screws. 9. Swagged-in internally threaded posts on the RF Deck Top Side chassis. 10. MCX coaxial cables disconnected from the analog module assemblies.

Figure 15-14. SLODM Assembly (2 of 2)and RF Deck Disassembly/Assembly

Disconnect the A18 RF Control PCB Assembly J4 Ribbon Cable

17. From the RF Deck Bottom Side on the A18 RF Control PCB Assembly, disconnect the J4 ribbon cable. As the Sampler/LO Distribution Module Assembly is gradually removed in steps below, the ribbon cable and connector must be carefully guided through the chassis opening to the RF Deck Top Side.

18. Also from the bottom side, remove the two (2) pan head Phillips M3 × 8 mm screws holding the rear of the Sampler/LO Distribution Module Assembly in place.

Remove the Top Side Hardware

19. From the RF Deck Top Side, remove the two (2) M3 × 8 mm screws and their #6 flat washers. Hold the Sampler/LO Distribution Module Assembly in place until ready to remove slowly.

20. Gradually pull the Sampler/LO Distribution Module Assembly out of the chassis, gradually feeding its ribbon cable through the chassis opening from the RF Deck Bottom Side to the Top Side.

Next Steps

21. At this point, use any of the following procedures to service the Sampler/LO Distribution Module Assembly components.

- Section 15-14, “Install the A100, A101, A102, and/or the A103 Sampler Module” on page 15-55 below.
- Section 15-12, “Replace the A130, A131, and/or A132 LO Coupler Modules” on page 15-49 below.
- Section 15-15, “Replace the A111 LO Distribution Module – ND73193 – 72440” on page 15-57 below.
- Section 15-16, “Replace the Obsolete A111 LO Distribution Module – ND70081 – 66270” on page 15-61 below.

22. When the required module component has been replaced, install the Sampler/LO Distribution Module Assembly assembly using the following procedure:

- Section 15-17, “Install the SLODM onto the RF Deck” on page 15-66 below.

15-11 Remove the A130, A131, and/or A132 LO Coupler Modules

Use this procedure to remove the A130, A131, and/or the A132 LO Coupler Modules. Remove the LO Coupler Modules to either replace them or to provide access to the underlying A100-A103 Sampler Modules or the A111 LO Distribution Module. The LO Coupler Module positioning and cables varies depending in the SLODM variant.

Parts and Applicability

- A130 LO Coupler Module – ND70083 – 68848
  - The replacement part comes with a soldered-on coaxial cable terminated with an MCX connector and must be used with the Phase 1 A111 LO Distribution Module – ND70081 – 66270.
  - For VNAs with S/N 1051172 and below, except S/N 1034144, the A130 is mounted on the A100 Sampler Module.
  - For VNAs with S/N 1034144, 1051173 and above to S/N 1120219, the A130 is mounted on the A101 Sampler Module if the VNA is not equipped with Option 080/081.
  - The A130 is not used in VNAs with S/N 1120220 and higher and is not used in Phase 2 VNAs.
- A131 LO Coupler Module – No ND – 70685
  - The A131 is only used on MS4647A VNAs equipped with the Broadband/Millimeter Wave Option 080/081.
  - If equipped, the A131 is always mounted on the A101 Sampler Module.
- A132 LO Coupler Module – No ND – 70685
  - The A132 is only used on MS4647A VNAs equipped with the Broadband/Millimeter Wave Option 080/081.
  - The A132 is always mounted on the A103 Sampler Module.

Identification – A130 LO Coupler Module

- See Figure 15-15 below for the A130 module ports and connectors.

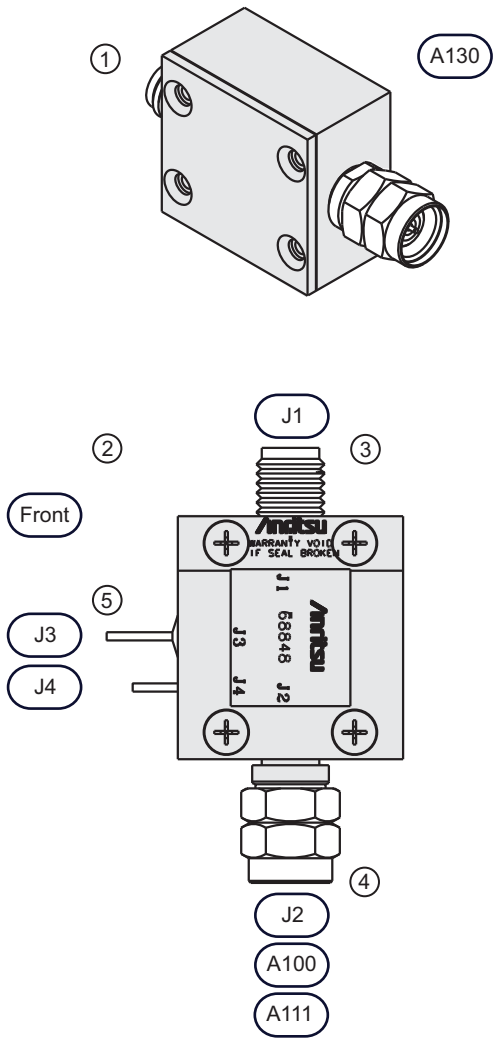

Orientation	A130 LO Coupler Module Connectors
1. Three-quarter view of the A130 LO Coupler Module from the bottom J2 connector. 2. A130 LO Coupler Module installation orientation is with J1 up, J2 down, and J3/J4 towards the front.	3. J1 Connector – Top – Connects via a semi-rigid coaxial cable to the A111 LO Coupler/Level Detector Assembly J2 connector. 4. J2 Connector – Bottom – Connects directly to the A100 Sampler Module top J2 connector. 5. J3/J4 Pins – Pins for a soldered-on coaxial cable. The other end of the cable is terminated with an MCX connector and is connected to the middle A13 Source Module and its J17 connector.

Figure 15-15. A130 LO Coupler Module – ND70083 – 68848 – Detail

Identification – A131 and A132 LO Coupler Modules

See Figure 15-15 below for the A131 and A132 module ports and connectors.

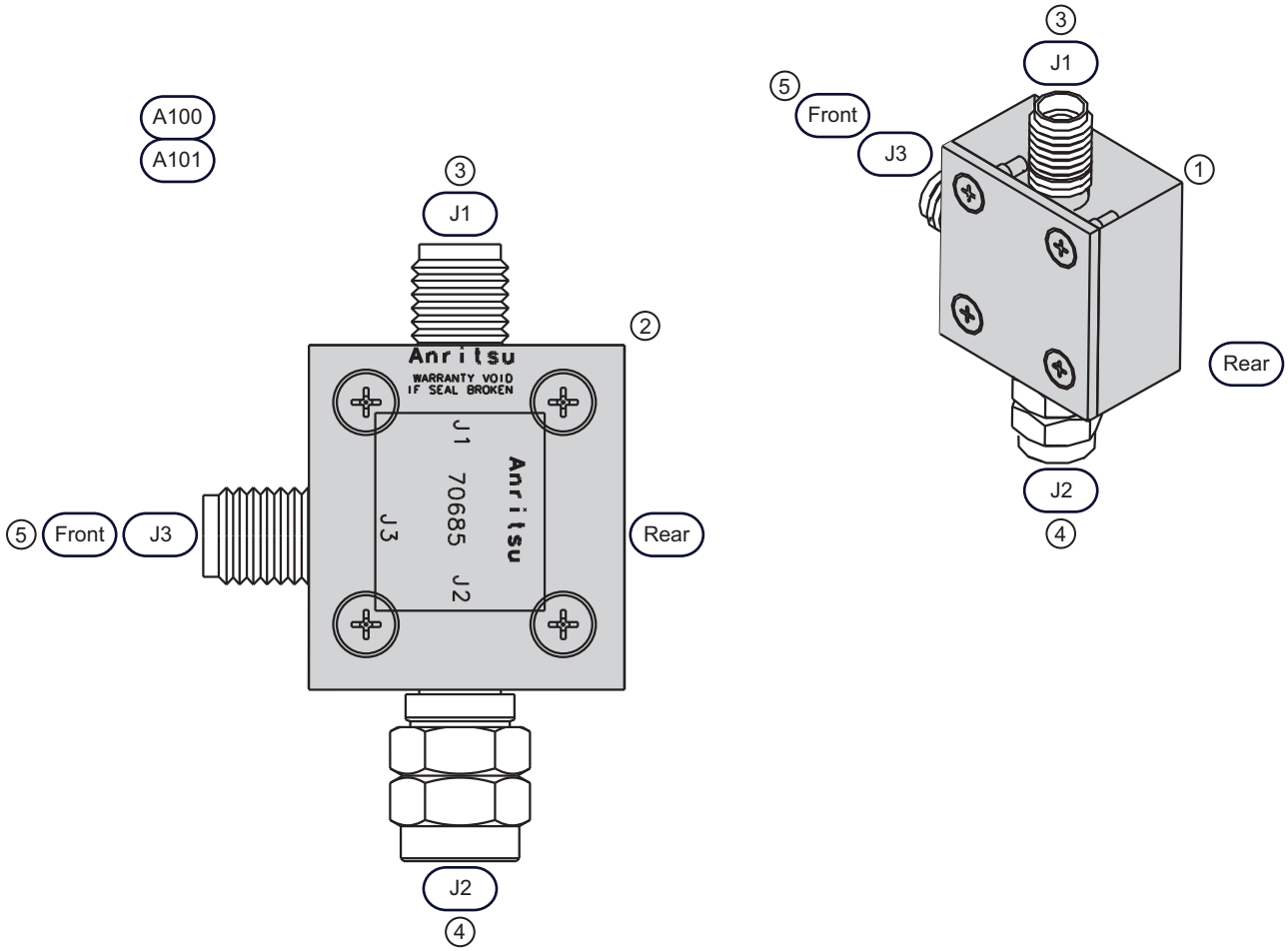

Orientation	A131-A132 LO Coupler Module Connectors
1. Three-quarter view of the A131-A132 LO Coupler Module from rear. 2. A131-A132 LO Coupler Module installation orientation is with J1 up, J2 down, and J3 towards the front. • Not shown here, when the A131-A132 modules are installed, they are oriented about 35 degrees towards the left.	3. J1 Connector – Top – Connects via a semi-rigid coaxial cable to the A111 LO Coupler/Level Detector Assembly. • A131 connects to the A111 J3 connector. • A132 connects to the A111 J5 connector. 4. J2 Connector – Bottom – Connects directly to the Sampler Module J2 connector. • A131 connectors to the A101 top J2 connector. • A132 connectors to the A103 top J2 connector. 5. J3 Connector – Connects via a semi-rigid coaxial cable which connects to the RF Deck front panel LO connectors. • A131 J2 connects to the RF Deck front panel LO1 connector. • A132 J2 connects to the RF Deck front panel LO2 connector.

Figure 15-16. A131-A132 LO Coupler Module – No ND – 70685 – Detail

Procedure

Common Procedures

1. Prepare work area, work surface, and observe safety issues.
   - See Section 7-4 “Common - Prepare Work Area and Safety” on page 7-9.
2. Remove Outer Cover.
   - See Section 7-5 “Common - Remove Outer Cover” on page 7-10.
3. Position the instrument so that it is right-side up, RF deck down.
4. Remove Inner Top Cover.
   - See Section 7-6 “Common - Remove Inner Cover” on page 7-13.
5. Add blocking under front of instrument.
6. Remove and set aside the Front Panel.
   - To remove it, see:
     - Section 10-3 “Remove the Phase 1 Front Panel Assembly” on page 10-3
     - Section 10-4 “Remove the Phase 2 Front Panel Assembly” on page 10-11
7. Position the instrument upside down.

Remove the RF Deck

8. Remove the RF Deck.
   - See Section 14-3 “Remove the RF Deck” on page 14-4.
9. Add two (2) T3545 RF Deck Fixtures to the RF Deck chassis.
   - See Section B-2 “T3545 RF Deck Fixture” on page B-1.

Remove the SLODM Assembly

10. Remove the SLODM Assembly from the RF Deck Top Side.
    - See Section 15-10, “Remove the Sampler/LO Distribution Module Assembly” on page 15-41 above.

Determine Module Location

11. Use these references to identify the location of the to-be-replaced module.
    - Table 15-2, “SLODM Assembly Component Variants” on page 15-27 above.
    - Figure 15-8, “SLODM Assembly – 62084 B – Components” on page 15-29 above.
    - Figure 15-9, “SLODM Assembly – 62084 B – Exploded View” on page 15-31 above.
    - Figure 15-10, “SLODM Assembly – 62084 C – Components” on page 15-33 above.
    - Figure 15-11, “SLODM Assembly – 73231 A – Components – MS4647A Option 080/081” on page 15-35 above.
    - Figure 15-12, “SLODM Assembly – 62084 D – Components” on page 15-37 above.
    - Figure 15-13, “SLODM Assembly – 73231 B – Components – MS4647A Option 080/081” on page 15-39 above.

Remove the A130, A131, and/or A132 LO Coupler Module

12. All power/signal and flexible coaxial cables should already be removed.
13. The general removal procedure for the each LO Coupler is the same with only the mounting position on the Sampler Modules and the attached cables changing.
14. For the semi-rigid coaxial cables, use a 5/16” torque end wrench set to 8 lbf · in to loosen each RF cable and then use finger pressure to remove the connection. Undo both ends of the cable, remove from the assembly, and set aside.

15. Note the orientation of each LO Coupler Module relative to the front edge of the SLODM Assembly. Hold the A130 LO Coupler Module and remove the connector between the A100 or A101 and the A130 LO Coupler Module.

- The A130 module is oriented with its J3/J4 pins and soldered-on cable towards the front.
- The A131 and A132 modules are oriented with their J3 connector towards the front and angled about 5 degrees to the left.

16. Using a 5/16" torque end wrench set to 8 lbf · in and a 5/16" end wrench, loosen the connection between the top LO Coupler and the bottom Sampler Module. Once loose, use finger pressure to undo the connection.

17. Remove the LO Coupler from the assembly and set aside.

18. Repeat as required for the remaining LO Coupler Modules.

Next Steps

19. At this point, the next steps depend on the repair goal.

20. To replace one or more LO Coupler Modules, see:

- Section 15-12, "Replace the A130, A131, and/or A132 LO Coupler Modules" on page 15-49 below.

21. To remove one or more Sampler Modules, see:

- Section 15-13, "Remove the A100, A101, A102, and/or A103 Sampler Modules" on page 15-51 below.

22. To replace the A111 LO Distribution Module, see:

- Section 15-15, "Replace the A111 LO Distribution Module – ND73193 – 72440" on page 15-57 below.
- Section 15-16, "Replace the Obsolete A111 LO Distribution Module – ND70081 – 66270" on page 15-61 below.

15-12 Replace the A130, A131, and/or A132 LO Coupler Modules

Use this procedure to remove the A130, A131, and/or the A132 LO Coupler Modules. Remove the LO Coupler Modules to either replace them or to provide access to the underlying A100-A103 Sampler Modules or the A111 LO Distribution Module. The LO Coupler Module positioning and cables varies depending in the SLODM variant.

Parts and Applicability

- A130 LO Coupler Module – ND70083 – 68848
  - The replacement part comes with a soldered-on coaxial cable terminated with an MCX connector and must be used with the Phase 1 A111 LO Distribution Module – ND70081 – 66270.
  - For VNAs with S/N 1051172 and below, except S/N 1034144, the A130 is mounted on the A100 Sampler Module.
  - For VNAs with S/N 1034144, 1051173 and above to S/N 1120219, the A130 is mounted on the A101 Sampler Module if the VNA is not equipped with Option 080/081.
  - The A130 is not used in VNAs with S/N 1120220 and higher and is not used in Phase 2 VNAs.
- A131 LO Coupler Module – No ND – 70685
  - The A131 is only used on MS4647A VNAs equipped with the Broadband/Millimeter Wave Option 080/081.
  - If equipped, the A131 is always mounted on the A101 Sampler Module.
- A132 LO Coupler Module – No ND – 70685
  - The A132 is only used on MS4647A VNAs equipped with the Broadband/Millimeter Wave Option 080/081.
  - The A132 is always mounted on the A103 Sampler Module.

Identification

- A130 LO Coupler Module
  - See Figure 15-15, “A130 LO Coupler Module – ND70083 – 68848 – Detail” on page 15-45 above.
- A131 or A132 LO Coupler Module
  - See Figure 15-16, “A131-A132 LO Coupler Module – No ND – 70685 – Detail” on page 15-46 above.

Procedure

Prerequisites

1. The SLODM Assembly has been removed from the RF Deck.
   - Section 15-10, “Remove the Sampler/LO Distribution Module Assembly” on page 15-41 above.
2. The A130, A131, and/or A132 LO Coupler Modules have been removed from the SLODM.
   - Section 15-11, “Remove the A130, A131, and/or A132 LO Coupler Modules” on page 15-44 above.

Install the LO Coupler Modules

3. Best practices recommend installing the LO Coupler Modules by working from left to right and installing each module and then its applicable semi-rigid coaxial cables. Do not connect any flexible coaxial cables until the SLODM Assembly is mounted on the RF Deck and the RF Deck in installed in the instrument.
4. Consult the references listed below as required to identify the SLODM Assembly configuration for your instrument.
   - Table 15-2, “SLODM Assembly Component Variants” on page 15-27 above.
   - Figure 15-8, “SLODM Assembly – 62084 B – Components” on page 15-29 above.
   - Figure 15-9, “SLODM Assembly – 62084 B – Exploded View” on page 15-31 above.

- Figure 15-10, “SLODM Assembly – 62084 C – Components” on page 15-33 above.
- Figure 15-11, “SLODM Assembly – 73231 A – Components – MS4647A Option 080/081” on page 15-35 above.
- Figure 15-12, “SLODM Assembly – 62084 D – Components” on page 15-37 above.
- Figure 15-13, “SLODM Assembly – 73231 B – Components – MS4647A Option 080/081” on page 15-39 above.

5. Working from left to right, gently mate the first LO Coupler Module to its matching Sampler Module connector making sure they are correctly aligned and threaded. Tighten finger tight.

6. Holding each LO Coupler Module correctly oriented on top of its Sampler, torque the connectors to 8 lbf · in.

- If present, the A130 module is oriented with its J3/J4 pins and soldered-on cable towards the front.
- If present, the A131 and A132 modules are oriented with their J3 connector towards the front and angled about 35 degrees to the left.

7. Repeat the two steps above each LO Coupler.

Next Steps

8. If no additional SLODM Assembly modules are to be replaced, install the SLODM in the RF Deck:

- See Section 15-17, “Install the SLODM onto the RF Deck” on page 15-66 below.

15-13 Remove the A100, A101, A102, and/or A103 Sampler Modules

Use this procedure to remove one or more Sampler Modules after the Sampler/LO Distribution Module Assembly has been removed from the instrument. Sampler Modules are generally removed to either replace with a new module or to access the underlying A111 LO Distribution Module.

Parts and Applicability

- A100 Sampler Module – ND70082 – 641870
- A101 Sampler Module – ND70082 – 641870
- A102 Sampler Module – ND70082 – 641870
- A103 Sampler Module – ND70082 – 641870
- This module is used on all instrument models with any combination of options.
- Each instrument contains four (4) sampler modules with different Engineering Reference Numbers. The replacement part numbers and Anritsu part numbers are the same. All of the parts are identical electrically and mechanically.
- The replacement kit contains one (1) Sampler Module.
- The related semi-rigid and MCX coaxial cables are not provided with the kit but are available in the instrument chassis.
- Other Sampler/LO Distribution Module Assembly components are not provided with the kit.
- If replacing the A100, A101, A102, and/or the A103 Sampler Module, any LO Coupler Module mounted on the sampler (A130 on the A100 or A101, A132 on the A101, A132 on the A103) must be removed.
- If removing the Sampler Modules to access the A111 LO Distribution Module, the Sampler/LO Coupler pair can be left assembled and only the cabling needs to be removed.
- See Table 15-2, “SLODM Assembly Component Variants” on page 15-27 above for Sampler and LO Coupler assembly pairs.

Identification – A100, A101, A102, A103

See Figure 15-17 below for the module ports and connectors.

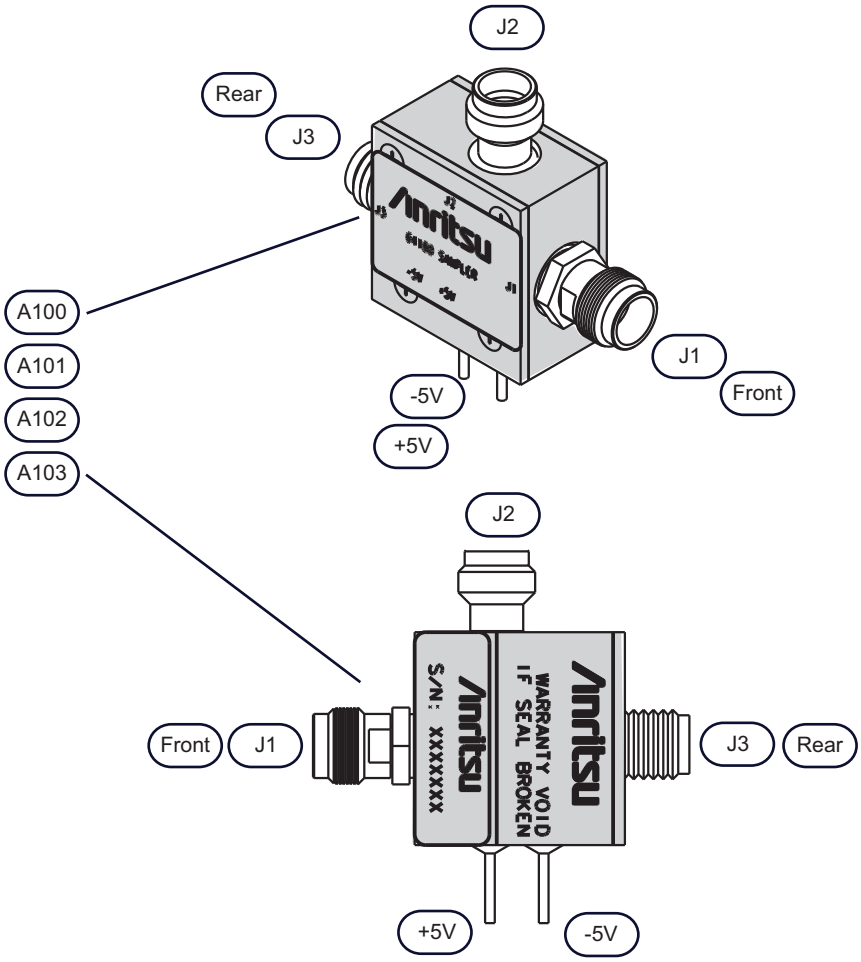

Sampler Module	Sampler Module Connectors
• A100 Sampler Module – ND70082 – 64180 • A101 Sampler Module – ND70082 – 64180 • A102 Sampler Module – ND70082 – 64180 • A103 Sampler Module – ND70082 – 64180	The Sampler Modules have the following ports and connectors in its as-installed orientation: • J1 – Located in front • J2 – Located on top • J3 – Located at rear • +5 V Pin – Located on bottom towards front • -5 V Pin – Located on bottom towards rear • Both pins mount into sockets on the A111 LO Distribution Module Assembly • Two (2) pan head Phillips M2.5 × 10 mm screws hold each Sampler Module onto the A111 LO Distribution Module Assembly.

Figure 15-17. A100, A101, A102, A103 Sampler Module – ND70082 – 64180 – Detail

Procedure

Common Procedures

1. Prepare work area, work surface, and observe safety issues.
   - See Section 7-4 “Common - Prepare Work Area and Safety” on page 7-9.
2. Remove Outer Cover.
   - See Section 7-5 “Common - Remove Outer Cover” on page 7-10.
3. Position the instrument so that it is right-side up, RF deck down.
4. Remove Inner Top Cover.
   - See Section 7-6 “Common - Remove Inner Cover” on page 7-13.
5. Add blocking under front of instrument.
6. Remove and set aside the Front Panel.
   - To remove it, see:
     - Section 10-3 “Remove the Phase 1 Front Panel Assembly” on page 10-3
     - Section 10-4 “Remove the Phase 2 Front Panel Assembly” on page 10-11
7. Position the instrument upside down.

Remove the RF Deck

8. Remove the RF Deck.
   - See Section 14-3 “Remove the RF Deck” on page 14-4.
9. Add two (2) T3545 RF Deck Fixtures to the RF Deck chassis.
   - See Section B-2 “T3545 RF Deck Fixture” on page B-1.

Remove the SLODM Assembly

10. Remove the SLODM Assembly from the RF Deck Top Side.
    - See Section 15-10, “Remove the Sampler/LO Distribution Module Assembly” on page 15-41 above.

Determine Module Location

11. If removing the Sampler Modules to access the A111 LO Distribution Module, the Sampler/LO Coupler pair can be left assembled and only the cabling needs to be removed.
12. If replacing the A100, A101, A102, and/or the A103 Sampler Module, any LO Coupler Module mounted on the sampler (A130 on the A100 or A101, A132 on the A101, A132 on the A103) must be removed. Use the references listed below to identify the location of the to-be-replaced module.
    - Table 15-2, “SLODM Assembly Component Variants” on page 15-27 above.
    - Figure 15-8, “SLODM Assembly – 62084 B – Components” on page 15-29 above.
    - Figure 15-9, “SLODM Assembly – 62084 B – Exploded View” on page 15-31 above.
    - Figure 15-10, “SLODM Assembly – 62084 C – Components” on page 15-33 above.
    - Figure 15-11, “SLODM Assembly – 73231 A – Components – MS4647A Option 080/081” on page 15-35 above.
    - Figure 15-12, “SLODM Assembly – 62084 D – Components” on page 15-37 above.
    - Figure 15-13, “SLODM Assembly – 73231 B – Components – MS4647A Option 080/081” on page 15-39 above.

Remove Any Equipped LO Coupler Module

13. If the Sampler/LO Coupler pair does not need to be separated, leave the pair connected and skip ahead to Step #16 below.
14. Remove each equipped LO Coupler Module by using a 5/16” torque end wrench set to 8 lbf · in and a 5/16” backing end wrench to loosen the semi-rigid coaxial cables connected to the A130, A131, or A132.

15. Once loose, use finger pressure to remove the connection and set aside the A130, A131, and/or the A132 LO Coupler Module.

Remove the Any or All of the Sampler Modules

16. Best practices recommend removing the Sampler Modules by working from right to left and labeling their A111 mounting position as they come out.
17. Use a 5/16" torque end wrench set to 8 lbf · in to loosen each RF cable. Once loose, use finger pressure to remove the connection.
18. Turn the A111 LO Distribution Module Assembly on its side and then remove the two (2) pan head Phillips M2.5 × 10 mm screws holding the Sampler Module in place. At the same time, keep positive pressure on the Sampler Module to keep it from falling out of its socket.
19. Turn the A111 LO Distribution Module Assembly right side up and then gently pull the Sampler Module out of its two-pin socket.

Next Steps

20. The next step depends on the repair goal.
21. To install the original and/or replacement Sampler Modules:
    - Section 15-14, "Install the A100, A101, A102, and/or the A103 Sampler Module" on page 15-55 below.
22. To replace the new A111 LO Distribution Module – ND73193 – 72440:
    - Section 15-15, "Replace the A111 LO Distribution Module – ND73193 – 72440" on page 15-57 below.
23. To replace the obsolete A111 LO Distribution Module – ND70081 – 66270:
    - Section 15-16, "Replace the Obsolete A111 LO Distribution Module – ND70081 – 66270" on page 15-61 below.

15-14 Install the A100, A101, A102, and/or the A103 Sampler Module

Use this procedure to install one or more of the Sampler Modules either after replacing a Sampler Module or after replacing the A111 LO Distribution Module.

Parts and Applicability

- A100 Sampler Module – ND70082 – 641870
- A101 Sampler Module – ND70082 – 641870
- A102 Sampler Module – ND70082 – 641870
- A103 Sampler Module – ND70082 – 641870
- This module is used on all instrument models with any combination of options.
- Each instrument contains four (4) sampler modules with different Engineering Reference Numbers. The replacement part numbers and Anritsu part numbers are the same. All of the parts are identical electrically and mechanically.
- The replacement kit contains one (1) Sampler Module.
- The related semi-rigid and MCX coaxial cables are not provided with the kit but are available in the instrument chassis.
- Other Sampler/LO Distribution Module Assembly components are not provided with the kit.
- If replacing the A100, A101, A102, and/or the A103 Sampler Module, any LO Coupler Module mounted on the sampler (A130 on the A100 or A101, A132 on the A101, A132 on the A103) must be removed.
- If removing the Sampler Modules to access the A111 LO Distribution Module, the Sampler/LO Coupler pair can be left assembled and only the cabling needs to be removed.
- See Table 15-2, “SLODM Assembly Component Variants” on page 15-27 above for Sampler and LO Coupler assembly pairs.

Identification – A100, A101, A102, A103

- See Figure 15-17, “A100, A101, A102, A103 Sampler Module – ND70082 – 64180 – Detail” on page 15-52 above for module ports and connectors.

Procedure

Prerequisites

1. The SLODM Assembly has been removed from the RF Deck.
   - Section 15-10, “Remove the Sampler/LO Distribution Module Assembly” on page 15-41 above.
2. The A130, A131, and/or A132 LO Coupler Modules have been removed from the SLODM.
   - Section 15-11, “Remove the A130, A131, and/or A132 LO Coupler Modules” on page 15-44 above.

Install the LO Coupler Modules

3. If installing all of the Sampler Modules, best practices recommend installing them from left to right as A100, A101, A102, and finally A103 on the A111 LO Distribution Module. The procedure below assumes that all four Sampler Modules are to be installed.
4. Identify the A100 module and insert it into the A111 Mounting Position 1 on the left side. Use the following figures for module location and orientation.
   - Figure 15-8, “SLODM Assembly – 62084 B – Components” on page 15-29 above.
   - Figure 15-9, “SLODM Assembly – 62084 B – Exploded View” on page 15-31 above.
   - Figure 15-10, “SLODM Assembly – 62084 C – Components” on page 15-33 above.
   - Figure 15-11, “SLODM Assembly – 73231 A – Components – MS4647A Option 080/081” on page 15-35 above.
   - Figure 15-12, “SLODM Assembly – 62084 D – Components” on page 15-37 above.

- Figure 15-13, “SLODM Assembly – 73231 B – Components – MS4647A Option 080/081” on page 15-39 above.

Position 1 and the A100 Sampler Module

5. Hold the A100 Sampler Module in place with finger pressure, turn the A111 LO Distribution Module Assembly on its side, insert the two Phillips head screws, and tighten.
6. Use the correct semi-rigid coaxial to connect the Position 1 A100 Sampler Assembly with the A111 left J2 connector.
   - If the A130 LO Coupler module is connected to the A100, connect the coaxial cable from the A130 top J1 to the A111 left J2.
   - If just the A100 Sampler, connect the coaxial cable from the A100 top J2 to the A111 left J2.
7. Align the Sampler Assembly connectors, thread, and then torque the cable connection to 8 lbf · in.

Position 2 and the A101 Sampler Module

8. Repeat Step #5 above for the Position 2 A101 Sampler Assembly with the A111 left center J3 connector.
   - If the A130 LO Coupler Module or the A131 LO Coupler Module is connected to the A101, connect the coaxial cable from the A130 or A131 top J1 to the A111 left center J2.
   - If just the A101 Sampler, connect the coaxial cable from the A101 top J2 to the A111 left center J3.
9. Align the Sampler Assembly connectors, thread, and then torque the cable connection to 8 lbf · in.

Position 3 and the A102 Sampler Module

10. Repeat Step #5 above for the Position 3 A103 Sampler Assembly with the A111 right center J4 connector.
    - On the A102 Sampler, connect the coaxial cable from the A102 top J2 to the A111 right center J4.
11. Align the Sampler Assembly connectors, thread, and then torque the cable connection to 8 lbf · in.

Position 4 and the A103 Sampler Module

12. Repeat Step #5 above for the Position 4 A103 Sampler Assembly with the A111 right J5 connector.
    - If the A132 LO Coupler Module is connected to the A103, connect the coaxial cable from the A132 top J1 to the A111 right center J2.
    - If just the A103 Sampler, connect the coaxial cable from the A103 top J2 to the A111 right J5.
13. Align the Sampler Assembly connectors, thread, and then torque the cable connection to 8 lbf · in.

Flexible Coaxial Cables

14. Connect the appropriate flexible coaxial MCX cables to the Sampler Module rear facing J3 connectors. Route the cables to the right side of the SLODM Assembly.
15. If the A130 LO Coupler Module is present, route its soldered-on front facing cable to the right.
16. This ends the A100, A101, A102, and/or A103 Sampler Module installation procedure

Next Steps

17. The next step depends on the repair goal.
18. To replace the A111 LO Distribution Module:
    - Section 15-15, “Replace the A111 LO Distribution Module – ND73193 – 72440” on page 15-57 below.
    - Section 15-16, “Replace the Obsolete A111 LO Distribution Module – ND70081 – 66270” on page 15-61 below.
19. To install the SLODM Assembly in the RF Deck:
    - Section 15-17, “Install the SLODM onto the RF Deck” on page 15-66

15-15 Replace the A111 LO Distribution Module – ND73193 – 72440

Use this procedure to replace the A111 LO Distribution Module – ND73193 – 72440. If replacing the earlier and obsolete A111 – ND70081 – 66270, use the procedure in Section 15-16, "Replace the Obsolete A111 LO Distribution Module – ND70081 – 66270" on page 15-61 below.

Mechanically, the A111 – ND70081 is identical to the A111 – ND73193 with the exception that the ND73193 has one (1) additional connector J6 located near the J1 connector.

Parts and Applicability

- A111 LO Distribution Module Assembly – ND73193 – 62270
  - The A111 – ND73193 is a replacement for the obsolete A111 – ND70081.
  - The replacement part does not come with any other modules nor with any cables.
  - All Phase 2 VNA (with S/Ns of 1133242 and higher) are equipped with the A111 – ND73193.
  - The A111 is a component of the Sampler/LO Distribution Module Assembly (SLODM).
  - The A111 provides mounting for the A100, A101, A102, and A103 Sampler Modules – ND70082 – 64180.
  - If replacing the A111 – ND70081 with the A111 – ND73193, two (2) additional cables are required. The specific required cables depend on the instrument serial number and equipped options.
  - For VNAs with S/N 1051172 and below, except S/N 1034144, the A130 is mounted on the A100 Sampler Module. To replace the A111:
    - The A130 – ND70083 with soldered-on cable harness is removed from the A100 and is set aside and not reinstalled.
    - The Semi-Rigid Coaxial cable 57989-3 which connects A130 top J1 to A111 left J2 is removed, set aside, and not reinstalled.
    - The Replacement Cable – ND73203 – 67355-12 connects A111 right side J6 to the A17 J17 must be ordered separately.
    - The Replacement Cable – No ND – 62111-1 connects the A100 top J2 connector to the A111 left J2 connector must be ordered separately.
  - For VNAs with S/N 1034144, 1051173 and above to S/N 1120219, the A130 is mounted on the A101 Sampler Module if the VNA is not equipped with Option 080/081.
    - The A130 – ND70083 with soldered-on cable harness is removed from the A101 and is set aside and not reinstalled.
    - The Semi-Rigid Coaxial Cable which connects A130 top J1 to A111 left center J3 is removed, set aside, and not reinstalled.
    - The Replacement Cable – ND73203 – 67355-12 connects A111 right side J6 to the A17 J17 must be ordered separately.
    - The Replacement Cable – No ND – 62111-8 connects the A101 top J2 connector to the A111 left center J2 connector must be ordered separately.
  - For VNAs with S/N 1120220 and higher and all Phase 2 VNAs:
    - The A130 LO Coupler Module is not used.
    - The equipped A111 is the A111 LO Distribution Module – ND73193 – 72440.
    - A111 replacement only involves removing the connected modules, attached cables, and then installing them on the new A111 module.
    - The connected modules vary depending on the instrument equipped option.
    - No additional replacement cables are required.

Identification – A111 – ND73193 – 72440

See Figure 15-18 below for the module ports and connectors.

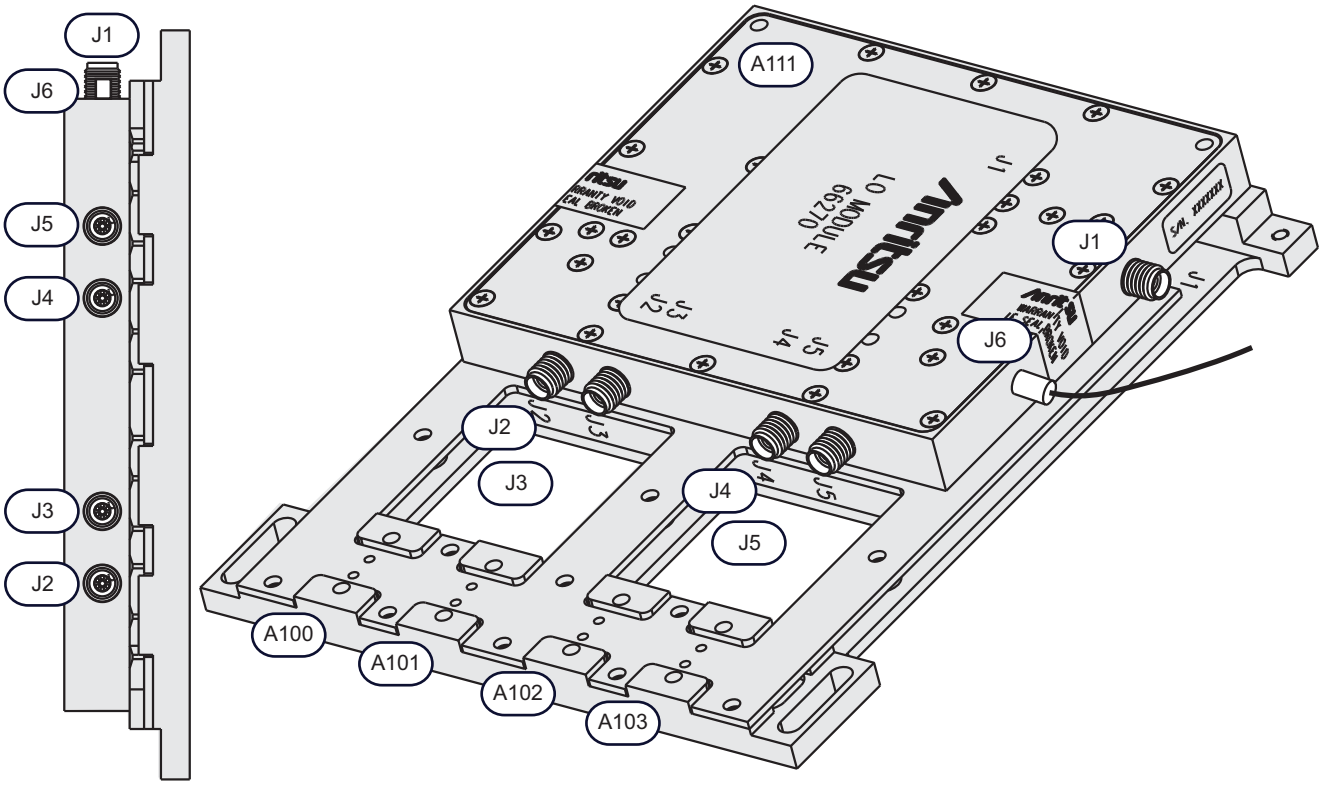

Orientation

- End view at left. Three-quarter view at right.

Replacement Part

The A111 – ND73193 – 72440 is original equipment on VNAs with S/N 1120220 and higher.

It is also the replacement for the obsolete A111 – ND70081 – 66270 for VNAs with S/N 1120219 and lower.

A111 LO Distribution Module Connectors

- A111 J1 connector – Right side rear – Connects via a semi-rigid coaxial cable to the middle A13 Source Module J4 High Band LO Output connector.
- A111 J2 connector – Front facing (left side).
- A111 J3 connector – Front facing (left center).
- A111 J4 connector – Front facing (right center).
- A111 J5 connector – Front facing (right).
- A111 J6 connector – Right side front – Coaxial cable connects to A13 Source Module (middle) J4 MCX connector

A100-A103 Sampler Modules

- A100 Sampler Module – Mounting location and socket on A111. The top J2 connects via a semi-rigid coaxial cable to the A111 left J2 connector
- A101 Sampler Module – Mounting location and socket on A111. The connections depend on the equipped options:
  - If 080/081 is not installed, the top J2 connects via a semi-rigid coaxial cable to the A111 left center J3 connector.
  - If 080/081 is installed, the top J2 connects with the A131 LO Coupler Module bottom J2 connector.
- A102 Sampler Module – Mounting location and socket on A111.The top J2 connects via a semi-rigid coaxial cable to the A111 right center J4 connector.
- A103 Sampler Module – Mounting location and socket on A111. The connections depend on the equipped options:
  - If 080/081 is not installed, the top J2 connects via a semi-rigid coaxial cable to the A111 right J5 connector.
  - If 080/081 is installed, the top J2 connects with the A132 LO Coupler Module bottom J2 connector.

Figure 15-18. A111 LO Distribution Module Assembly – ND73193 – 72440 – Detail

Procedure

Common Procedures

1. Prepare work area, work surface, and observe safety issues.
   - See Section 7-4 “Common - Prepare Work Area and Safety” on page 7-9.
2. Remove Outer Cover.
   - See Section 7-5 “Common - Remove Outer Cover” on page 7-10.
3. Position the instrument so that it is right-side up, RF deck down.
4. Remove Inner Top Cover.
   - See Section 7-6 “Common - Remove Inner Cover” on page 7-13.
5. Add blocking under front of instrument.
6. Remove and set aside the Front Panel.
   - To remove it, see:
     - Section 10-3 “Remove the Phase 1 Front Panel Assembly” on page 10-3
     - Section 10-4 “Remove the Phase 2 Front Panel Assembly” on page 10-11
7. Position the instrument upside down.

Remove the RF Deck

8. Remove the RF Deck.
   - See Section 14-3 “Remove the RF Deck” on page 14-4.
9. Add two (2) T3545 RF Deck Fixtures to the RF Deck chassis.
   - See Section B-2 “T3545 RF Deck Fixture” on page B-1.

Remove the SLODM Assembly

10. Remove the SLODM Assembly from the RF Deck Top Side.
    - See Section 15-10, “Remove the Sampler/LO Distribution Module Assembly” on page 15-41 above.
11. If the instrument is an MS4647A VNA equipped with Option 080/081, the A131 LO Coupler is installed on the A101 Sampler Module, and the A132 LO Coupler is installed on the A131 Sampler. If just replacing the A111, these module pairs can be left connected and removed as pairs.
12. The semi-rigid coaxial cables between the A100, A101, A102, and A103 Sampler Modules forward facing J1 connectors and the RF Deck front panel components must be disconnected from the Sampler Modules.
13. The MCX coaxial cables must be disconnected from the A100, A101, A102, and A103 Sampler Module rear facing J2 connectors. These cables route to the analog module assemblies.

Remove the A100, A101, A102, and A103 Sampler Modules

14. Working from right to left, remove the Sampler Modules.
    - See Section 15-13, “Remove the A100, A101, A102, and/or A103 Sampler Modules” on page 15-51 above.
15. Identify the mounting position for each Sampler Assembly and set aside.

Prepare the Replacement A111 LO Distribution Module Assembly

16. Set the to-be-replaced A111 LO Distribution Module Assembly aside.
17. On the new A111 LO Distribution Module Assembly, remove any protective covers.

Install the Sampler Modules

18. The installation procedure is the reverse of the sections above.
19. Working from left to right, install the Sampler Assemblies.

- See Section 15-14, “Install the A100, A101, A102, and/or the A103 Sampler Module” on page 15-55 above.

Install the LO Coupler Modules

20. If present, and not yet installed, add the required LO Coupler Modules.

- See Section 15-12, “Replace the A130, A131, and/or A132 LO Coupler Modules” on page 15-49 above.

Add Final Cables

21. Connect any remaining semi rigid and/or flexible coaxial cables as required.

Next Steps

22. If other Sampler/LO Distribution Module Assembly components are to be removed or replaced, use procedures listed below.

- Section 15-11, “Remove the A130, A131, and/or A132 LO Coupler Modules” on page 15-44 above.
- Section 15-12, “Replace the A130, A131, and/or A132 LO Coupler Modules” on page 15-49 above.
- Section 15-13, “Remove the A100, A101, A102, and/or A103 Sampler Modules” on page 15-51 above.
- Section 15-14, “Install the A100, A101, A102, and/or the A103 Sampler Module” on page 15-55 above.

23. If no other replacements are required, use the procedure below to install the SLODM Assembly.

- Section 15-17, “Install the SLODM onto the RF Deck” on page 15-66 below.

15-16 Replace the Obsolete A111 LO Distribution Module – ND70081 – 66270

Use this procedure to replace the obsolete A111 LO Distribution Module – ND70081 – 66270. If replacing the current A111 – ND73193 – 72440, use the procedure in Section 15-15, "Replace the A111 LO Distribution Module – ND73193 – 72440" on page 15-57 above.

Mechanically, the A111 – ND70081 is identical to the A111 – ND73193 with the exception that the ND73193 has one (1) additional connector J6 located near the J1 connector.

Parts and Applicability

- A111 LO Distribution Module Assemble – ND70081 – 66270
  - Equipped on VNAs with S/N 1120219 and below.
  - The A111 – ND70081 – 66270 is obsolete and no longer available. Use the A111 – ND73193 – 72440 as a replacement along with two additional cables. The required cable part numbers vary depending on the instrument S/N, model, and equipped options.
- A111 LO Distribution Module Assembly – ND73193 – 72440
  - Used here to replace the obsolete A111 – ND70081 – 66270.
  - The A111 is a component of the SLODM Assembly.
  - The A111 provides mounting for the A100, A101, A102, and A103 Sampler Modules – ND70082 – 64180.
  - The Flexible Coaxial Cable – ND73203 – 67355-12 and either the Semi-Rigid Coaxial Cable – No ND – 62111-1 or the Semi-Rigid Coaxial Cable – No ND – 62111-8 are also required and must be ordered separately.
- Flexible Coaxial Cable – ND73203 – 67355-12
  - The Flexible Coaxial Cable – ND73203 – 67355-12 is required and must be ordered separately. It is not a part of the A111 – ND73193 – 72440 replacement kit.
- Semi-Rigid Coaxial Cable – No ND – 62111-1
  - If the VNA is equipped with an A130 LO Coupler Module – ND70083 – 68848 mounted on top of the A100 Sampler Module, the Semi-Rigid Coaxial Cable – No ND – 62111-1 is also required and must be ordered separately. It is not a part of the A111 – ND73193 – 72440 replacement kit.
- Semi-Rigid Coaxial Cable – No ND – 62111-8
  - If the VNA is equipped with an A130 LO Coupler Module – ND70083 – 68848 mounted on top of the A101 Sampler Module, the Semi-Rigid Coaxial Cable – No ND – 62111-8 is also required and must be ordered separately. It is not a part of the A111 – ND73193 – 72440 replacement kit.

Identification – A111 – ND70081 – 66270

See above for the Figure 15-18, “A111 LO Distribution Module Assembly – ND73193 – 72440 – Detail” on page 15-58 above for the replacement module ports and connectors.

See Figure 15-19 below for the obsolete A111 – ND70081 module ports and connectors.

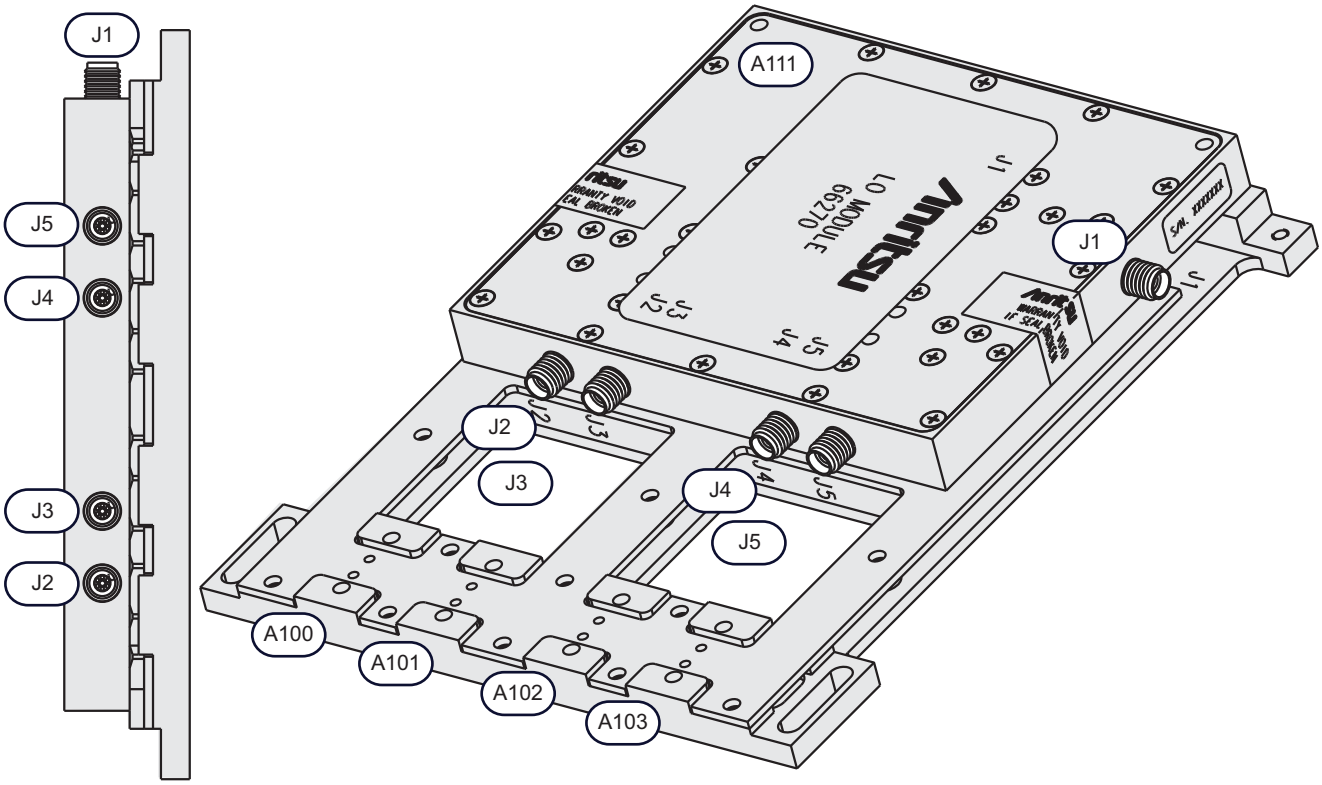

Figure 15-19. A111 LO Distribution Module Assembly – ND70081 – 66270 – Detail (1 of 2)

Orientation

- End view at left. Three-quarter view at right.

Replacement Part

The obsolete ND70081 – 66270 is shown here and is equipped on VNAs with S/N 1120219 and lower.

It is replaced by the A111 – ND73193 – 72440 and two additional cables which must be ordered separately.

A111 LO Distribution Module Connectors

- A111 J1 connector – Right side rear – Connects via a semi-rigid coaxial cable to the middle A13 Source Module J4 High Band LO Output connector.
- A111 J2 connector – Front facing (left side).
- A111 J3 connector – Front facing (left center).
- A111 J4 connector – Front facing (right center).
- A111 J5 connector – Front facing (right).

A100-A103 Sampler Modules

- A100 Sampler Module – Mounting position 1 and socket on A111. Depending on the VNA S/N and equipped options, the A100 top J2 connects to either:
  - A semi-rigid coaxial cable that connects to the A111 left J2 connector.
  - If present, to the A130 LO Coupler Module bottom J2 connector.
- A101 Sampler Module – Mounting position 2 and socket on A111. Depending on the VNA S/N and equipped options, the A101 top J2 connects to either:
  - A semi-rigid coaxial cable that connects to the A111 left center J3 connector.
  - If present, to the A130 LO Coupler Module bottom J2 connector.
  - If present, to the A131 LO Coupler Module bottom J2 connector.
- A102 Sampler Module – Mounting position 3 and socket on A111.The top A102 top J2 connects via a semi-rigid coaxial cable to the A111 right center J4 connector.
- A103 Sampler Module – Mounting position 4 and socket on A111. Depending on the VNA S/N and equipped options, the A103 top J3 connects to either:
  - A semi-rigid coaxial cable that connects to the A111 right J4 connector.
  - If present, to the A132 LO Coupler Module bottom J2 connector.

Figure 15-19. A111 LO Distribution Module Assembly – ND70081 – 66270 – Detail (2 of 2)

Procedure

Common Procedures

1. Prepare work area, work surface, and observe safety issues.
   - See Section 7-4 “Common - Prepare Work Area and Safety” on page 7-9.
2. Remove Outer Cover.
   - See Section 7-5 “Common - Remove Outer Cover” on page 7-10.
3. Position the instrument so that it is right-side up, RF deck down.
4. Remove Inner Top Cover.
   - See Section 7-6 “Common - Remove Inner Cover” on page 7-13.
5. Add blocking under front of instrument.
6. Remove and set aside the Front Panel.
   - To remove it, see:
     - Section 10-3 “Remove the Phase 1 Front Panel Assembly” on page 10-3
     - Section 10-4 “Remove the Phase 2 Front Panel Assembly” on page 10-11
7. Position the instrument upside down.

Remove the RF Deck

8. Remove the RF Deck.
   - See Section 14-3 “Remove the RF Deck” on page 14-4.
9. Add two (2) T3545 RF Deck Fixtures to the RF Deck chassis.
   - See Section B-2 “T3545 RF Deck Fixture” on page B-1.

Remove the SLODM Assembly

10. Remove the SLODM Assembly from the RF Deck Top Side.
    - See Section 15-10, “Remove the Sampler/LO Distribution Module Assembly” on page 15-41 above.

Remove Any LO Coupler Modules

11. If present, remove the LO Coupler Modules and their related flexible and semi-rigid coaxial cables. The possible modules are the:
    - A130 LO Coupler Module – ND70083 – 68848
    - A131 LO Coupler Module – No ND – 70685
    - A132 LO Coupler Module – No ND – 70685
    - See Section 15-11, “Remove the A130, A131, and/or A132 LO Coupler Modules” on page 15-44 above.
12. Identify the mounting position of each LO Coupler Assembly and set aside.

Remove the A100, A101, A102, and A103 Sampler Modules

13. Working from right to left, remove the Sampler Modules and their related flexible and semi-rigid coaxial cables.
    - See Section 15-13, “Remove the A100, A101, A102, and/or A103 Sampler Modules” on page 15-51 above.
14. Identify the mounting position for each Sampler Assembly and set aside.

Prepare the Replacement A111 LO Distribution Module Assembly

15. Set the to-be-replaced A111 LO Distribution Module Assembly aside.
16. On the new A111 LO Distribution Module Assembly, remove any protective covers.

Install the Sampler Modules

17. The installation procedure is the reverse of the sections above.

18. Make sure that any LO Coupler Modules that were mounted on top of the Sampler Modules have been removed.

19. Working from left to right, install the Sampler Assemblies.

- See Section 15-14, “Install the A100, A101, A102, and/or the A103 Sampler Module” on page 15-55 above.

Do Not Reinstall the A130 LO Coupler Module

20. Do not reinstall the A130 LO Coupler Module on top of the A100 or A101. It will not be reused.

21. Do not reinstall the semi-rigid coaxial cable that was used to connect the A130 top J1 connector to either the A111 left J2 connector or to the A111 left center J3 connector. It will not be reused.

Install the Replacement 62111-1 or 62111-8 Semi-Rigid Coaxial Cables

22. If the A130 was installed on top of the A100, connect the 62111-8 Cable between the A100 top J2 connector and the A111 left J2 connector.

23. If the A130 was installed on top of the A101, connect the 62111-1 Cable between the A101 top J2 connector and the A111 left center J3 connector.

24. Note that either cable must be ordered separately.

Install the A131 and A132 LO Coupler Modules

25. If present, connect the A131 top J1 connector with a semi-rigid coaxial cable to the A111 left center J3 connector.

26. If present, connect the A132 top J1 connector with a semi-rigid coaxial cable to the A111 right J5 connector.

- See Section 15-12, “Replace the A130, A131, and/or A132 LO Coupler Modules” on page 15-49 above.

Add the Flexible Coaxial Cable – ND73203 – 67355-12

27. Connect the flexible coaxial cable to the A111 right side J2 connector, which is just in front of the J1 connector. This cable will be connected ultimately connected to the middle A13 Source Module PCB J17 connector. Do not connect until the SLODM is installed in the RF Deck and the RF Deck is installed in the instrument chassis.

Final Cables

28. Connect any remaining semi-rigid or flexible coaxial cables as required.

Next Step

29. Install the SLODM Assembly into the RF Deck.

- See Section 15-17, “Install the SLODM onto the RF Deck” on page 15-66 below.

15-17 Install the SLODM onto the RF Deck

Use this procedure to install the Sampler/LO Distribution Module (SLODM) Assembly into the RF Deck Top Side chassis after replacing one or more of the SLODM Assembly components. The figure below is repeated for orientation.

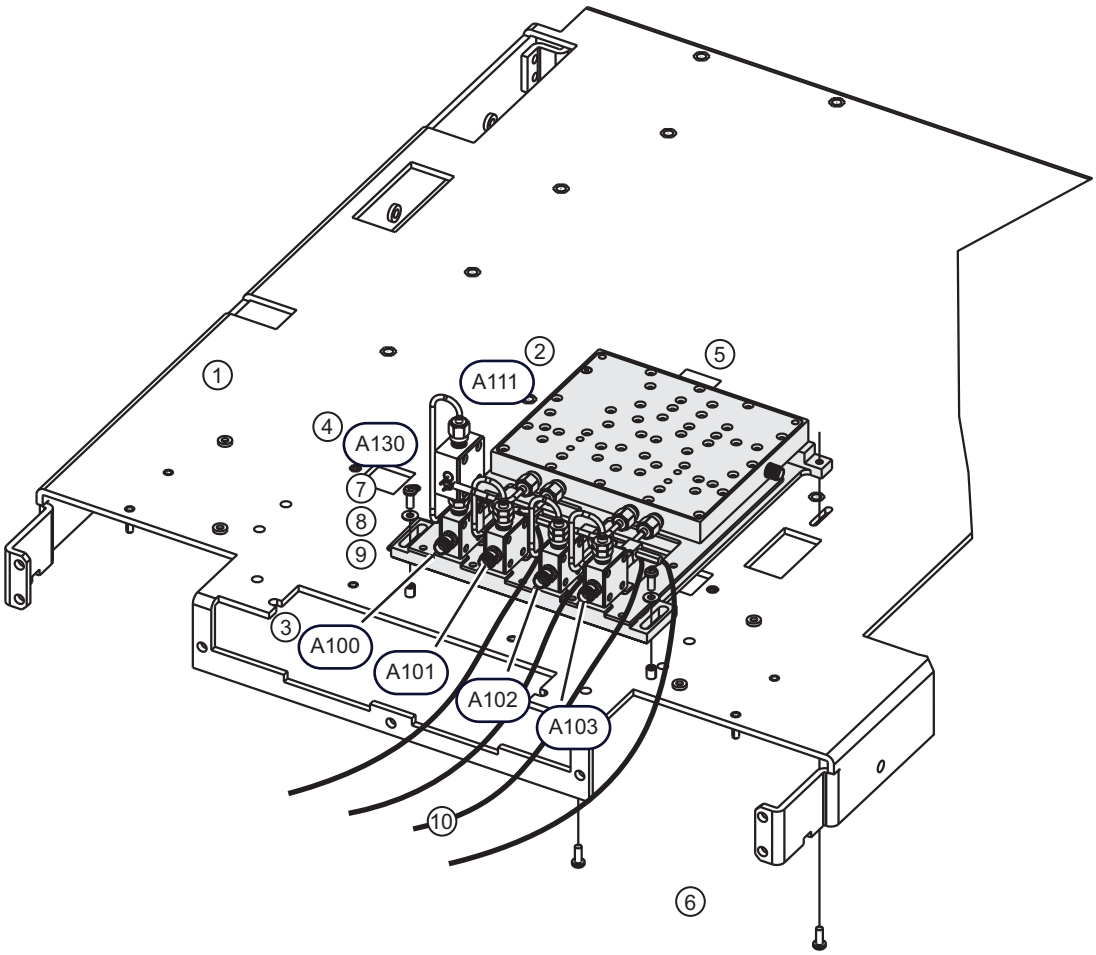

Orientation

RF Deck Top Side viewed from front panel. Typical Phase 1 VNA SLODM shown here.

Removals

1. RF Deck Top Side removed from instrument chassis. The RF Deck front panel removed for clarity.

Sampler/LO Distribution Module Assembly

2. A111 LO Distribution Module Assembly provides mounting for the rest of the components.
3. A100, A101, A102, and A103 Sampler Modules – Mounted into sockets on A111 LO Distribution Module Assembly.
4. A130 LO Coupler Module – Mounted on top of the A100 Sampler Module.

RF Deck Bottom Side

5. Ribbon cable between the A111 LO Distribution Module Assembly and the bottom side A18 RF Control PCB Assembly J4 connector.
6. From the bottom side, two (2) pan head Phillips M3 × 8 mm screws.

RF Deck Top Side

7. From the top side, two (2) pan head Phillips M3 × 8 mm screws.
8. Two (2) flat #6 washers under the M3 × 8 mm screws.
9. Swagged-in internally threaded posts on the RF Deck Top Side chassis.
10. MCX coaxial cables disconnected from the analog module assemblies.

Figure 15-20. Installing the Sampler/LO Distribution Module Assembly

Prior Procedures

Use the procedures in the sections above to replace any of the Sampler/LO distribution Module Assembly components as required:

- Section 15-12, “Replace the A130, A131, and/or A132 LO Coupler Modules” on page 15-49 above.
- Section 15-14, “Install the A100, A101, A102, and/or the A103 Sampler Module” on page 15-55 above.
- Section 15-15, “Replace the A111 LO Distribution Module – ND73193 – 72440” on page 15-57 above.
- Section 15-16, “Replace the Obsolete A111 LO Distribution Module – ND70081 – 66270” on page 15-61 above.

Procedure

Common Procedures

1. Prepare work area, work surface, and observe safety issues.
   - See Section 7-4 “Common - Prepare Work Area and Safety” on page 7-9.

Install the Sampler/LO Distribution Module Assembly on the RF Deck

2. Place the Sampler/LO Distribution Module Assembly approximately in place on the RF Deck Top Side and hold in place.
3. Position the RF Deck on its side.
4. Thread the ribbon cable from the A111 LO Distribution Module Assembly through the RF Deck Top Side chassis opening towards the RF Deck Bottom Side and the A18 RF Control PCB Assembly.
5. As the ribbon cable is threaded through, gradually move the Sampler/LO Distribution Module Assembly back until it fits over the two internally-threaded posts near the front of the RF Deck Top Side chassis.
6. From the RF Deck Top Side, insert two (2) M3 × 8 mm screws, each with #6 flat washers into the threaded posts. Do not tighten. These screws and washers hold the Sampler/LO Distribution Module Assembly in place.

Connect the A111 LO Distribution Module Assembly to the A18 RF Control PCB Assembly

7. On the RF Deck Bottom Side, connect the A111 LO Distribution Module Assembly ribbon cable to the A18 RF Control PCB Assembly at its J4 connector. The connector is keyed and can only go on one way.
8. Make sure the A18 RF Control PCB Assembly J4 ribbon cable connection is fully pushed on.

Fasten the A111 LO Distribution Module Assembly in Place

9. From the RF Deck Bottom Side, insert the two (2) pan head Phillips M3 × 8 mm screws. Do not tighten.
10. On the RF Deck Top Side, adjust the position of the A111 LO Distribution Module Assembly until the two front pan head screws and washers are centered in the front mounting slots on the A111 LO Distribution Module Assembly chassis. Tighten the screws.
11. On the RF Deck Bottom Side, tighten the two screws that thread in mounting positions of the A111 LO Distribution Module Assembly.

Install RF Deck

12. Install the RF Deck into the instrument chassis.
    - See Section 14-4 “Install the RF Deck” on page 14-12.
13. Make sure all the cables are correctly routed and connected.
14. If replacing the obsolete A111 LO Distribution Module with the new A111 – ND73193 – 72440, connect the installed MCX flexible coaxial cable from A111 right side J6 to the middle A13 Source Module PCB J17 connector.

Install the Front Panel

15. Position the instrument right side up.

16. Apply blocking under the front of the instrument.

17. Install the Front Panel assembly.

- See Section 10-6 “Install the Phase 1 Front Panel Assembly” on page 10-19.

Completion Procedures

18. Install the Inner Cover.

- See Section 7-7 “Common - Install Inner Cover” on page 7-15.

19. Install the Outer Cover.

- See Section 7-8 “Common - Install Outer Cover” on page 7-16.

20. Tighten the four (4) handle screws.

Chapter 16 — Rear Panel Components

16-1 Introduction

This chapter describes removing the Rear Panel and then servicing the underlying A17 Rear Panel PCB Assembly and the Rear Panel (Analog) Fan Assembly. It also describes removing the Rear Panel to provide access to other internal components. The Rear Panel Assembly and the attached outer silk-screened connector identification Rear Panel Sub Plate are not replacement parts. This chapter covers the following procedures:

- Section 16-3, “Remove the Rear Panel Assembly” on page 16-2
- A17 Rear Panel PCB Assembly
  - Section 16-4, “Remove the A17 Rear Panel PCB Assembly” on page 16-15
  - Section 16-5, “Prepare the Replacement A17 Rear Panel PCB Assembly” on page 16-17
  - Section 16-6, “Install the A17 Rear Panel PCB Assembly” on page 16-17
- Rear Panel Fan Assembly
  - Section 16-7, “Remove the Rear Panel Fan Assembly” on page 16-19
  - Section 16-8, “Preparing the Replacement Rear Panel Fan” on page 16-20
  - Section 16-9, “Install the Rear Panel Fan Assembly” on page 16-21
- Section 16-10, “Installing the Rear Panel Assembly” on page 16-22

16-2 Parts and Applicability

This procedure covers removing, preparing, and installing these parts.

- A17 Rear Panel PCB – ND70067 – 61924-3
- Rear Panel Fan Assembly, 330 mm Cable Attached – ND70074 – 62095-2
- Digital Section Fan Assembly – ND70073 – 62089
- These parts are used on all instrument models with any combination of options.

This procedure covers removing the rear panel and other assemblies to provide access for these parts:

- Power Supply Module – ND70072 – 62088 or ND73933 – 71995
- Digital PCB Fan Assembly, 165 mm Cable Attached – ND70073 – 62095-1
- Motherboard 1 PCB Assembly – ND70069 – 61920-3

16-3 Remove the Rear Panel Assembly

Use this procedure to remove the Rear Panel to provide access for internal parts. The Rear Panel is not a replacement part but does mount the Rear Panel cooling fan for the Analog PCB Bay and the A17 Rear Panel PCB Assembly.

Identification

Use the figures below to identify the relevant parts and components.

- Figure 16-1, “Rear Panel Assembly – Outside – Panel Attached with Covers Off” on page 16-3 shows the general location of components with the rear panel installed.
- Figure 16-2, “Rear Panel Assembly – Inside – A17 PCB Cable Connections” on page 16-5 shows the cable connections between the A17 PCB and the Rear Panel and the Motherboard 2 PCB Assembly.
- Figure 16-3, “Rear Panel Assembly – Outside – A17 PCB and Fan Mounting Hardware” on page 16-7 shows a view of the A17 PCB cabling connections with the rear panel removed.
- Figure 16-4, “Rear Panel Assembly – Inside View – Cable Connections” on page 16-9 shows a view of the A17 PCB cabling connections with the rear panel removed.

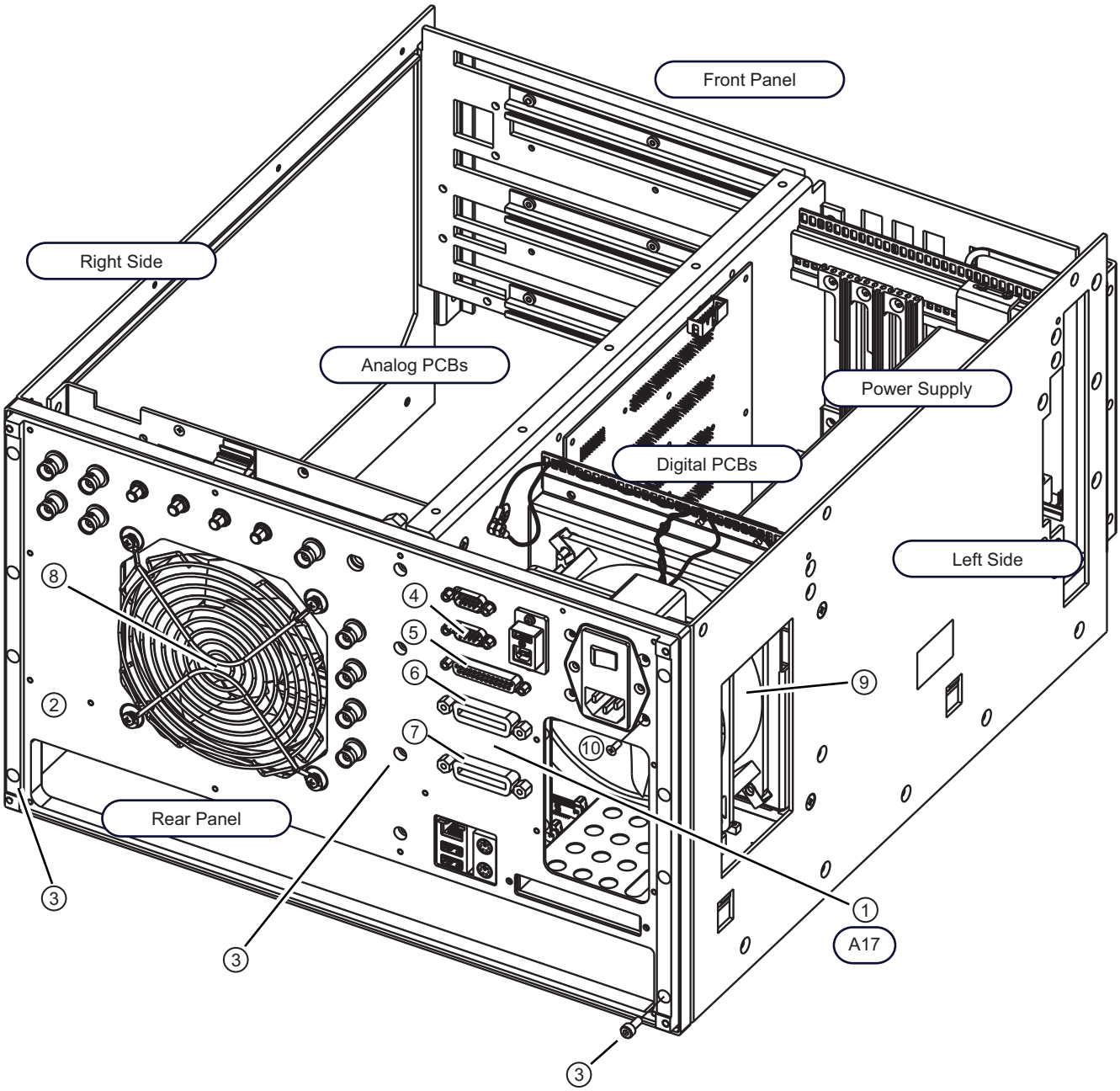

Figure 16-1. Rear Panel Assembly – Outside – Panel Attached with Covers Off (1 of 2)

Orientation

The instrument chassis viewed from the Rear Panel with the covers off.

Rear Panel

1. A17 Rear Panel PCB located here on inside of Rear Panel.
2. Rear Panel Logo Sub Plate removed. The sub plate is fastened using 14 pan head Phillips M3 × 6 mm screws. It can be removed with the covers on or off.
3. Rear Panel Fastening Screws. The rear panel chassis is held to the rest of the instrument chassis using 12 socket head Allen M4 × 20 mm screws. There are three rows of four screws each at the left, center, and right.

Rear Panel Connectors

4. Serial Connector port with two (2) 4×40 × 0.187 connector mounting standoffs.
5. External I/O Control port with two (2) 4×40 × 0.187 connector mounting standoffs. The connector mounting standoffs here and above thread to standard DB connectors. The standoffs must be removed to service the A17 PCB.
6. IEEE 488.2 GPIB Port with two (2) 4×40 × 0.650 connector mounting standoffs.
7. Dedicated GPIB Port with two (2) 4×40 × 0.650 connector mounting standoffs. The connector mounting standoffs here and above thread into standard stackable GPIB Test Cable Connectors.

Fans

8. Rear Panel (Analog) Fan Assembly. The Rear Panel must be removed to service the fan.
9. Digital PCB Fan Assembly. The Rear Panel must be removed to service the fan.

Figure 16-1. Rear Panel Assembly – Outside – Panel Attached with Covers Off (2 of 2)

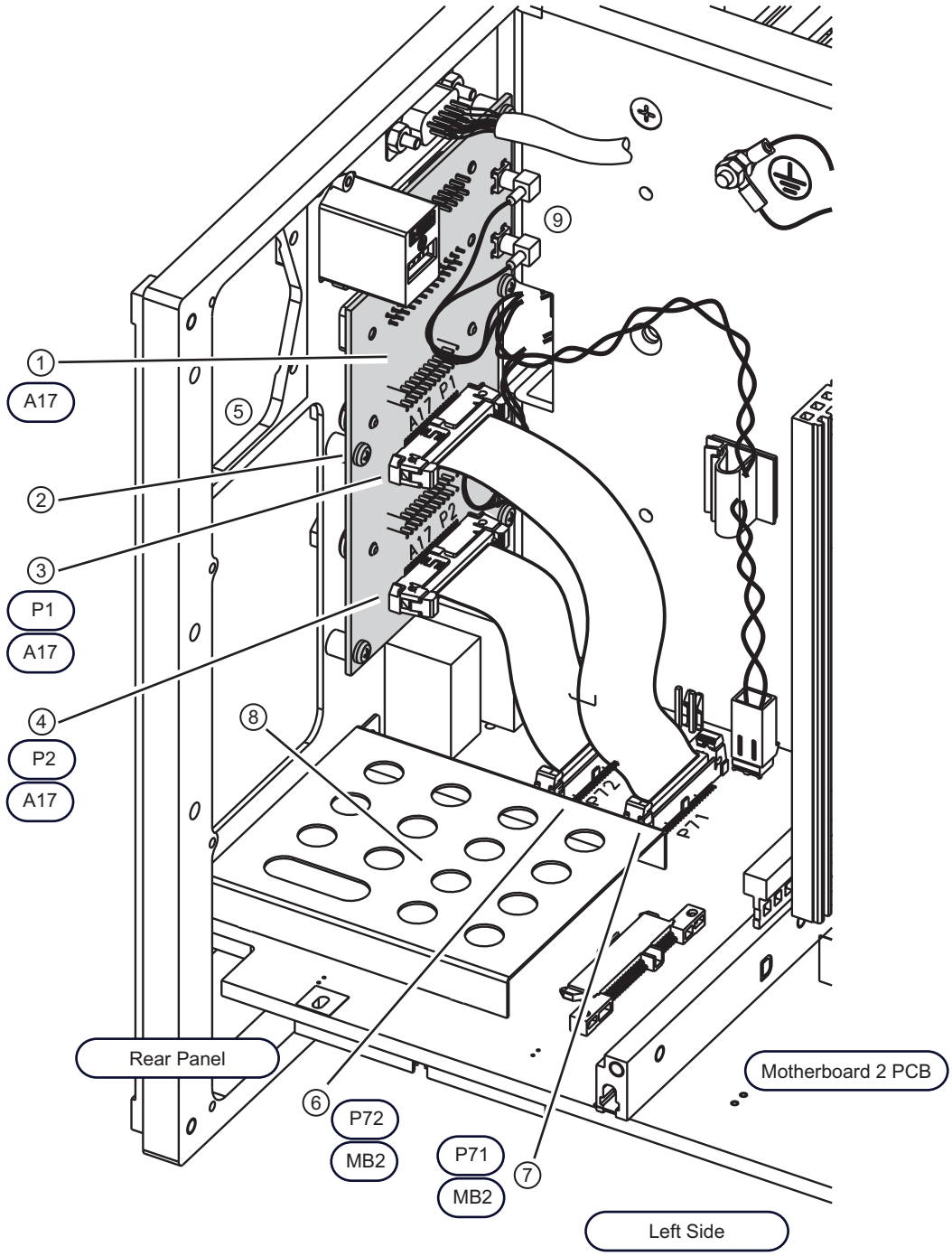

Figure 16-2. Rear Panel Assembly – Inside – A17 PCB Cable Connections (1 of 2)

Orientation

The instrument is viewed from the left side with the side plate removed for clarity. The rear panel is to the left.

A17 Rear Panel PCB Assembly

1. 1 – A17 Rear Panel PCB – ND70067 – 61924-3
   - Provides mechanical support and signal connection for the rear panel Serial I/O Port DB connector port, the External I/O Port DB connector port, the IEEE 488.2 GPIB Connector port, and the Dedicated GPIB Connector port.
   - The Serial I/O and External I/O connectors are each fastened to the Rear Panel Chassis Plate with two (2) 4×40 × 0.187 hex M-F threaded connector mounting standoffs.
   - The IEEE 488.2 GPIB Port and the Dedicated GPIB Port are each fastened to the Rear Panel Chassis Plate with two (2) 4×40 × 0.650 hex M-F connector mounting standoffs that support stackable GPIB Test Cable Connectors.
   - The eight (8) connector mounting standoffs described above must be removed from the outside of the Rear Panel to service the A17 Rear Panel PCB Assembly.
2. Five (5) pan head Phillips M3 × 6 mm mounting screws holding the A17 PCB to swagged-in standoffs on the Rear Panel Plate. The screws are removed from the inside of the Rear Panel.
3. A17 PCB P1 connector – For ribbon cable to Motherboard 2 PCB Assembly connector P71.
4. A17 PCB P2 connector – For ribbon cable to Motherboard 2 PCB connector P72.

Chassis Openings

5. Chassis opening for the AC Power Module and Switch (not shown here for clarity).
6. Motherboard 2 PCB P72 ribbon cable connector.
7. Motherboard 2 PCB P71 ribbon cable connector.
8. Enclosure and connector for the SATA Solid State Drive / Hard Disk Drive (not shown here for clarity).
9. A17 PCB MCX coaxial connectors P8, P9, P10, and P11 which connect to the Rear Panel BNC trigger ports.

Figure 16-2. Rear Panel Assembly – Inside – A17 PCB Cable Connections (2 of 2)

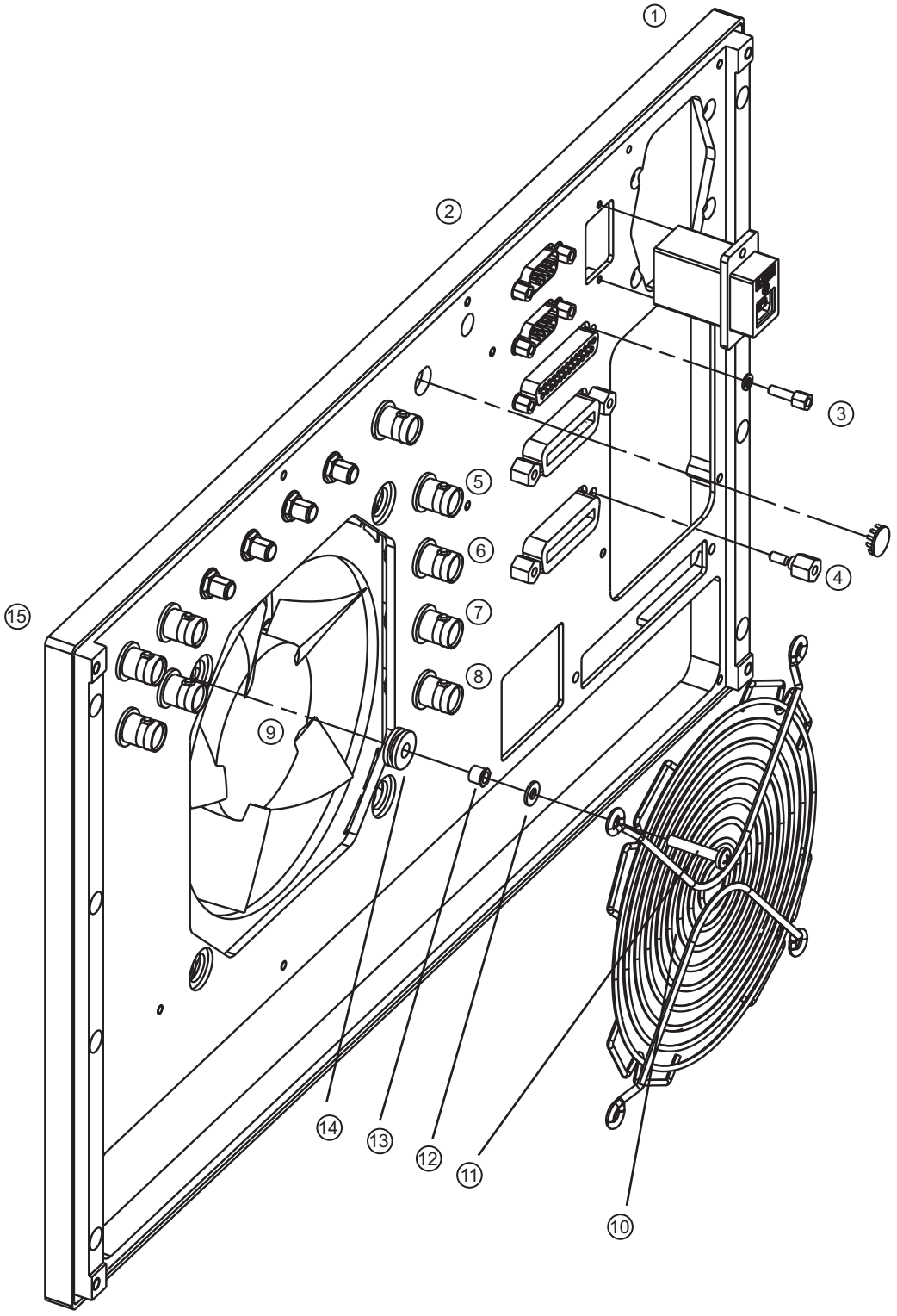

Figure 16-3. Rear Panel Assembly – Outside – A17 PCB and Fan Mounting Hardware (1 of 2)

Orientation

1. Rear Panel Assembly viewed from outside.

A17 Rear Panel Assembly PCB

2. A17 Rear Panel PCB Assembly – ND70067 – 61924-3 – PCB mounted here (not shown) on inside of Rear Panel Assembly.
3. M-F Hex Connector Standoffs for Serial I/O and External I/O connectors. Each connector is fastened to the Rear Panel Chassis Plate with two (2) 4×40 × 0.187 hex M-F threaded connector mounting standoffs.
4. M-F Hex Connector Standoffs for IEEE 488.2 GPIB Port and the Dedicated GPIB Port connectors. Each connector is fastened to the Rear Panel Chassis Plate with two (2) 4×40 × 0.650 hex M-F connector mounting standoffs that support stackable GPIB Test Cable Connectors.

External Trigger BNC Connectors

The coaxial cables from these BNC connectors route to the MCX connectors on the A17 PCB. The cables are permanently attached to the BNC connectors:

5. Ext Trigger (External Trigger) BNC Connector – Connects to A17 PCB MCX connector P11.
6. Lock Status BNC Connector – Connects to A17 PCB MCX connector P10.
7. Ready for Trigger BNC Connector – Connects to A17 PCB MCX connector P9.
8. Trigger Out BNC Connector – Connects to A17 PCB MCX connector P8.

Rear Fan Assembly

9. Rear Panel Fan Assembly – ND70074 – 62095-2

Rear Fan Mounting Hardware

The Rear Panel Fan is held in place with the following hardware:

10. Protective Fan Guard
11. Four (4) pan head Phillips 6×32 × 0.750” screws
12. Four (4) #6 flat washers
13. Four (4) self-clinch standoffs #6 clearance × 0.187”
14. Four (4) vibration isolation grommets
15. Four (4) 6×32 Spring Clip Nut Fastener (on inside of chassis, not shown here).

Figure 16-3. Rear Panel Assembly – Outside – A17 PCB and Fan Mounting Hardware (2 of 2)

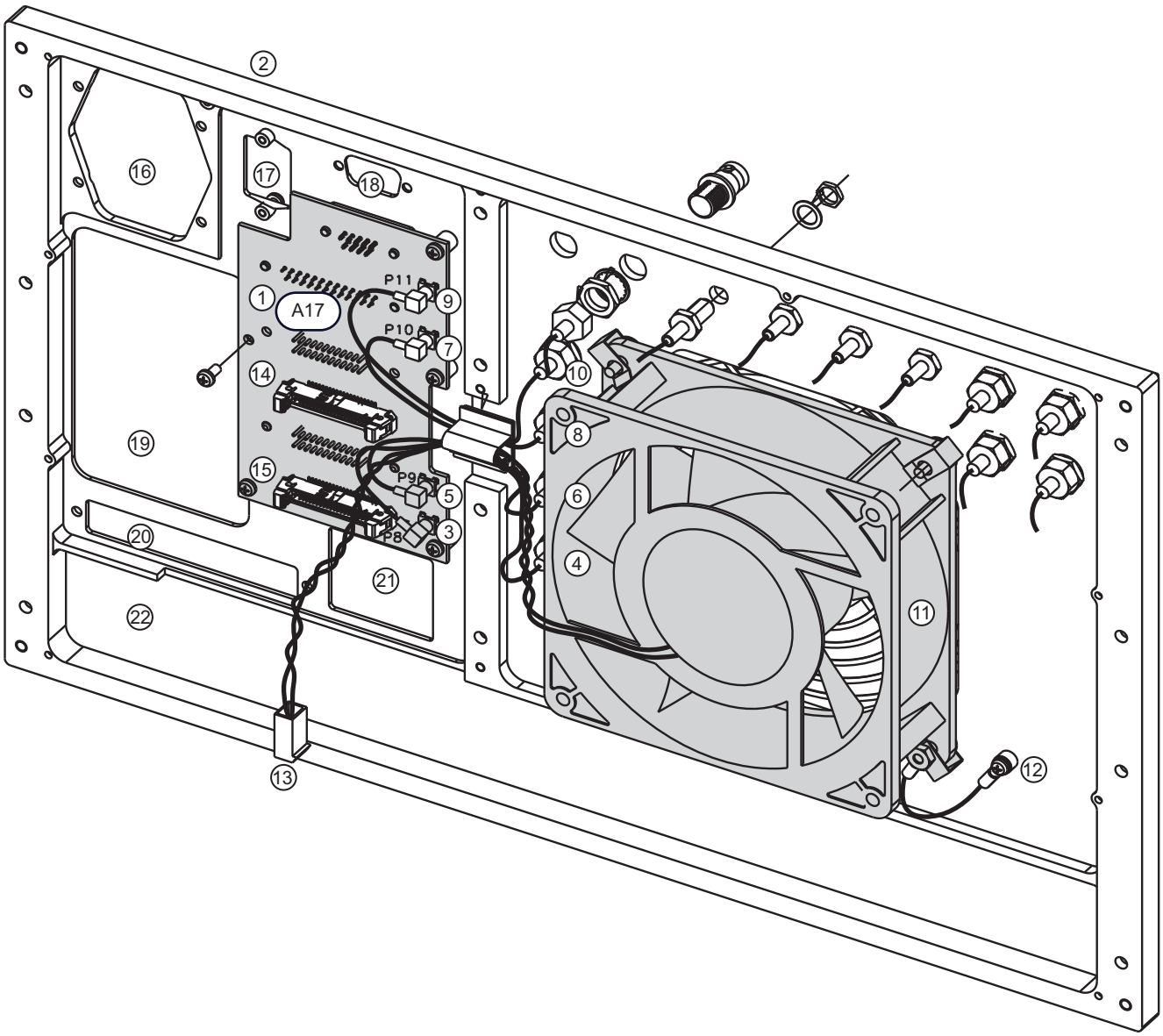

Figure 16-4. Rear Panel Assembly – Inside View – Cable Connections (1 of 2)

Orientation

1. A17 Rear Panel PCB Assembly – ND70067 – 61924-3
2. Rear Panel Chassis Plate

A17 PCB - MCX to BNC Connections

3. A17 Rear Panel PCB Assembly P8 MCX Connector – Connects to Trigger Out BNC
4. Rear Panel Trigger Out BNC Connector (partially hidden by fan)
5. A17 Rear Panel PCB Assembly P9 MCX Connector – Connects to Ready for Trigger BNC
6. Rear Panel Ready for Trigger BNC Connector (partially hidden by fan)
7. A17 Rear Panel PCB Assembly P10 MCX Connector – Connects to Lock Status BNC
8. Rear Panel Lock Status BNC Connector (partially hidden by fan)
9. A17 Rear Panel PCB Assembly P11 MCX Connector – Connects to External Trigger BNC
10. Rear Panel External Trigger BNC Connector

Rear Panel Fan Assembly

11. Rear Panel Fan Assembly – ND70074 – 62095-2
12. Rear Panel Fan Ground Connection to Rear Panel Chassis Plate.
13. Rear Panel Fan Power Connection – Connects to Motherboard 2 PCB Assembly P95 connector.

A17 PCB - Motherboard 2 PCB Ribbon Cables

14. A17 Rear Panel PCB Assembly P1 (upper) connector – Ribbon cable to Motherboard 2 PCB Assembly P71 connector.
15. A17 Rear Panel PCB Assembly P2 (lower) connector – Ribbon cable to Motherboard 2 PCB Assembly P72 connector.

Rear Panel Chassis Plate Openings

16. Opening for AC Power Module
17. Opening for USB Control Port.
18. Opening for VGA/XGA Video Port
19. Opening Digital PCB Fan air entry.
20. Opening for SATA Hard Disk Drive.
21. Opening for Ethernet Network Port, USB Ports, and PS/2 ports.
22. Opening for RF Deck Rear Panel

Figure 16-4. Rear Panel Assembly – Inside View – Cable Connections (2 of 2)

Procedure

Common Procedures

1. Prepare work area, work surface, and observe safety issues.

- See Section 7-4 “Common - Prepare Work Area and Safety” on page 7-9.

2. Remove Outer Cover.

- See Section 7-5 “Common - Remove Outer Cover” on page 7-10.

3. Position the instrument so that it is right-side up, RF deck down.

4. Remove Inner Top Cover.

- See Section 7-6 “Common - Remove Inner Cover” on page 7-13.

5. The Front Panel can stay attached to the instrument chassis.

- Best practices recommend removing the Front Panel Loops if equipped.

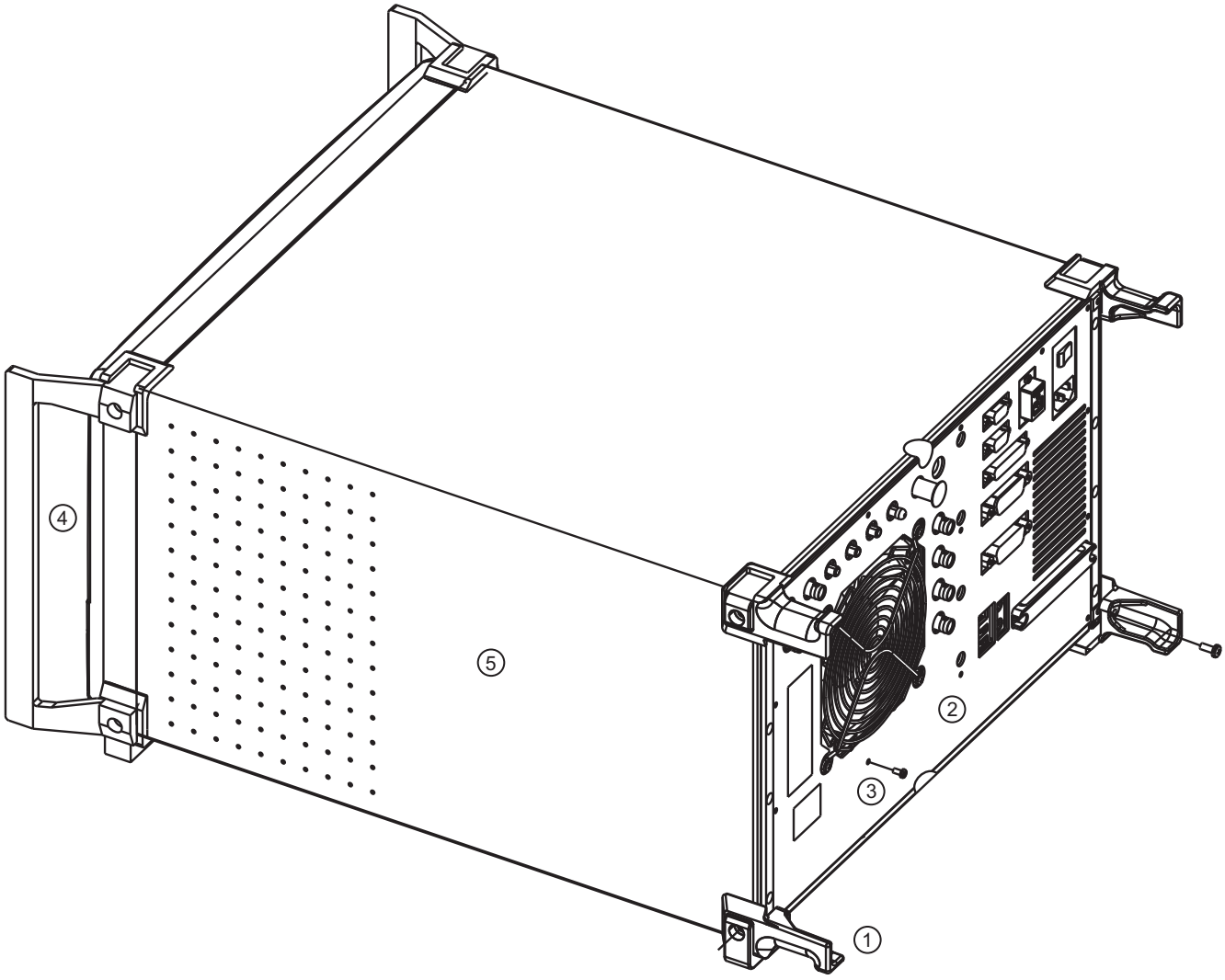

1. Rear Panel
2. Silk-screened Rear Panel Sub Plate
3. Rear Panel Sub Plate fastening hardware of 14 pan head Phillips M3 × 6 mm screws.
4. Front Panel
5. Covers shown on here. Best practices recommend removing the covers before using this procedure.

Figure 16-5. Remove or Install the Rear Panel Sub Plate

Remove Rear Panel Sub Plate

6. Remove and set aside the 14 pan head Phillips M3 × 6 mm screw holding the silk-screened Rear Panel Sub Plate in place.
7. Gently pull off the Rear Panel Sub Plate and set aside.

Note	Be careful handling the Sub Plate and do not scratch its surface.

Remove the Rear Panel Assembly

8. Remove the Rear Panel Loops and set aside.
9. Remove the four (4) outer flat head Phillips M3 × 6 mm screws that hold the AC Module Housing to the Rear Panel. As the Rear Panel is removed, the AC Module Housing stays attached through its cable harness to the Power Supply Module.
10. Using an 8 mm hex Allen driver, remove the 12 cap socket Allen-head M4 ×10 mm screws that hold the Rear Panel Assembly to the instrument chassis.

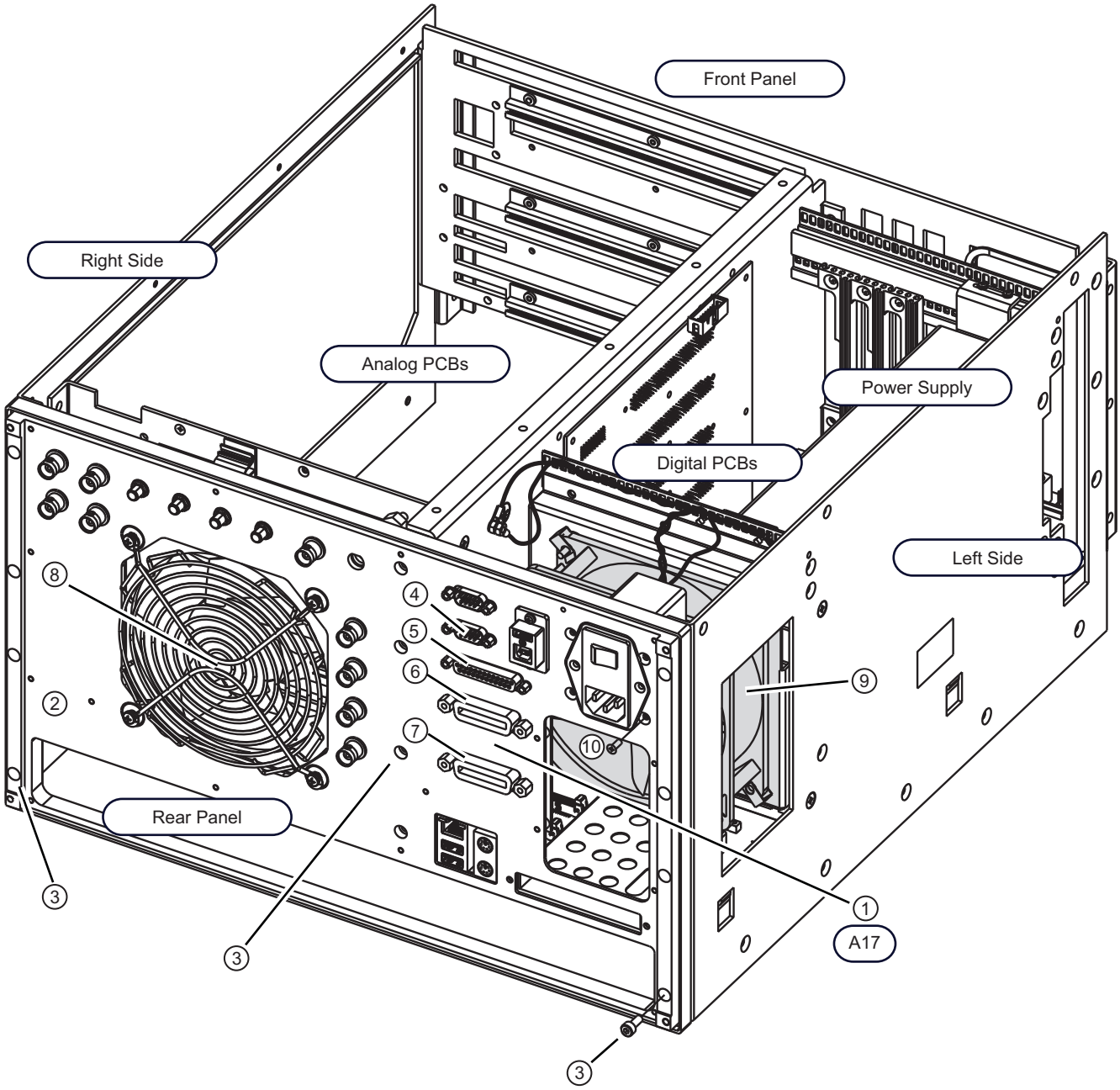

Figure 16-6. Remove or Install the Rear Panel Assembly (1 of 2)

Orientation

Chassis viewed from the left rear corner of the instrument.

Components

1. A17 Rear Panel PCB Assembly (not shown) located on inside of the Rear Panel Chassis Plate.
2. Rear Panel Chassis plate with silk-screened Rear Panel Sub Plate removed.
3. Rear Panel Chassis Plate fastening hardware of 12 cap socket Allen-head M4 ×10 mm screws arranged in three (3) rows of four (4) screws each.

A17 Rear Panel PCB Connectors (top to bottom)

4. Serial (10101) Port DB connector and its two (2) connector standoffs.
5. External I/O Port DB connector and its two (2) connector standoffs.
6. IEEE 488.2 GPIB Port connector and its two (2) connector standoffs.
7. Dedicated GPIB Port connector and its two (2) connector standoffs.

Rear Panel Components

8. Rear Panel Fan Assembly and Grill.
9. Digital PCB Fan/Bracket/Card Guide Assembly.
10. Two (2) middle flat head Phillips M4 × 8 mm screws hold the AC Input Module Assembly to the Rear Panel Chassis Plate.

Figure 16-6. Remove or Install the Rear Panel Assembly (2 of 2)

Disconnect Motherboard 2 PCB Ribbon Cables

11. Gently pull the Rear Panel partially out, so as to gain access to the right side (when viewed from the chassis rear) ribbon cables between the A17 PCB and the Motherboard 2 PCB.

12. Cut any securing cable tie. It is probably easier to disconnect the cables from the Motherboard 2 PCB.

- A17 PCB P1 connector for ribbon cable to MB2 PCB connector P71.
- A17 PCB P2 connector for ribbon cable to MB2 PCB connector P72.

13. If the ribbon cables stay on the A17 PCB, they should be installed on the replacement A17 PCB as required during reassembly.

Next Steps

14. The next step depends on the removal purpose.

15. To replace the A17 Rear Panel PCB Assembly, skip ahead to Section 16-4, “Remove the A17 Rear Panel PCB Assembly” on page 16-15.

16. To replace the Rear Panel Fan Assembly, skip ahead to Section 16-7, “Remove the Rear Panel Fan Assembly” on page 16-19.

17. To replace another assembly, skip to any of the following chapters:

- Chapter 17 — Power Supply Module
- Chapter 18 — Digital PCB Fan Assembly
- Chapter 19 — MB1 and MB2 PCB Replacement Procedures

18. To re-install the Rear Panel, skip ahead to Section 16-10, “Installing the Rear Panel Assembly” on page 16-22.

16-4 Remove the A17 Rear Panel PCB Assembly

Use this procedure to remove the A17 Rear Panel PCB Assembly. In general, the only reason to remove the A17 PCB is to replace it.

Part and Applicability

- A17 Rear Panel PCB Assembly – ND70067 – 61924-3
- This PCB is used on all VNA models with any combination of options.

Procedure

Prerequisites

1. The Rear Panel Assembly must have been removed from the instrument chassis.
   - See Section 16-3 “Remove the Rear Panel Assembly” on page 16-2 above.

Remove Connector Hex M-F Standoffs

2. On the outside of the rear panel, use hex drivers to remove the M-F hex connector standoffs from four (4) connectors mounted on the A17 PCB. There are eight (8) total connector standoffs to be removed.
3. Use a 7 mm hex driver to remove the hex M-F connector standoffs from the Serial I/O (top) and the External I/O connectors.
   - Each connector is fastened to the Rear Panel Chassis Plate with two (2) 4×40 × 0.187 hex M-F threaded connector mounting standoffs.
4. Use a 3/16” hex driver to remove the M-F connector standoffs from the IEEE 488.2 GPIB connector and the Dedicated GPIB connector.
   - Each connector is fastened to the Rear Panel Chassis Plate with two (2) 4×40 × 0.650 hex M-F connector mounting standoffs that support stackable GPIB Test Cable Connectors.

Remove A17 PCB MCX Connectors and Coaxial Cables

5. Working from the top to the bottom of the PCB, remove the four (4) MCX coaxial cables from the A17 PCB. These cables route to Rear Panel BNC connectors for triggering functions. The coaxial cables are permanently attached to the rear panel BNC connectors.
6. Remove the coaxial cable from the top A17 PCB P11 MCX Connector.
   - Connects to the External Trigger BNC.
7. Remove the coaxial cable from the A17 PCB P10 MCX Connector.
   - Connects to the Lock Status BNC.
8. Remove the coaxial cable from the A17 PCB P9 MCX Connector.
   - Connects to the Ready for Trigger BNC.
9. Remove the coaxial cable from the bottom A17 PCB P8 MCX Connector.
   - Connects to the Trigger Out BNC.

Remove A17 PCB Mounting Hardware

10. Remove the five (5) pan head Phillips M3 × 6 mm mounting screws holding the A17 PCB to the swagged-in standoffs on the Rear Panel Plate.
11. Remove the A17 PCB and set aside.

Next Steps

12. The next step depends on the removal purpose.
13. To replace the A17 Rear Panel PCB Assembly, skip ahead to Section 16-4, “Remove the A17 Rear Panel PCB Assembly” on page 16-15.

14. To replace the Rear Panel Fan Assembly, skip ahead to Section 16-7, “Remove the Rear Panel Fan Assembly” on page 16-19.

15. To replace another assembly, skip to any of the following chapters:

- Chapter 17 — Power Supply Module
- Chapter 18 — Digital PCB Fan Assembly
- Chapter 19 — MB1 and MB2 PCB Replacement Procedures

16. To re-install the Rear Panel, skip ahead to Section 16-10, “Installing the Rear Panel Assembly” on page 16-22.

16-5 Prepare the Replacement A17 Rear Panel PCB Assembly

There are no replaceable components on the A17 PCB. If any of the ribbon cables came out with the to-be-replaced PCB, remove them and install on the replacement A17 PCB. After installing out the ribbon cables, skip ahead to Section 16-6, “Install the A17 Rear Panel PCB Assembly” on page 16-17 below.

16-6 Install the A17 Rear Panel PCB Assembly

Use this procedure to install the replacement A17 Rear Panel PCB Assembly.

Part and Applicability

- A17 Rear Panel PCB Assembly – ND70067 – 61924-3
- This PCB is used on all VNA models with any combination of options.

Identification

Use the figures in the sections above to identify the relevant parts and components.

- Figure 16-1, “Rear Panel Assembly – Outside – Panel Attached with Covers Off” on page 16-3 shows the general location of components with the rear panel installed.
- Figure 16-2, “Rear Panel Assembly – Inside – A17 PCB Cable Connections” on page 16-5 shows the cable connections between the A17 PCB and the Rear Panel and the Motherboard 2 PCB Assembly.
- Figure 16-3, “Rear Panel Assembly – Outside – A17 PCB and Fan Mounting Hardware” on page 16-7 shows a view of the A17 PCB and fan mounting hardware.
- Figure 16-4, “Rear Panel Assembly – Inside View – Cable Connections” on page 16-9 shows a view of the A17 PCB cabling connections with the rear panel removed.

Procedure

Prerequisites

1. The A17 Rear Panel PCB Assembly has been removed from the Rear Panel.
   - See Section 16-4 “Remove the A17 Rear Panel PCB Assembly” on page 16-15 above.

Install the A17 PCB

2. On the inside of the Rear Panel, place the A17 PCB into position and loosely insert the five (5) pan head Phillips M3 × 6 mm mounting screws.
3. When all screws are in place and correctly threaded, check the alignment of the connectors from the outside of the Rear Panel and adjust the PCB positioning as required.
   - Serial I/O connector (second connector from top on outside of Rear Panel)
   - External I/O connector
   - IEEE 488.2 GPIB connector
   - Dedicated GPIB connector.
4. When correctly positioned, tighten the five (5) screws.

Connect the MCX Coaxial Cables

5. Working from the bottom to the top of the PCB, connect the four (4) triggering MCX coaxial cables to the A17 PCB.
6. Connect the Trigger Out coaxial cable to the bottom A17 PCB P8 MCX Connector.
7. Connect the Ready for Trigger coaxial cable to the A17 PCB P9 MCX Connector.
8. Connect the Lock Status coaxial cable to the A17 PCB P10 MCX Connector.

9. Connect the External Trigger coaxial cable to the top A17 PCB P11 MCX Connector.

Connect the Ribbon Cables to the A17 PCB

10. Attach the longer ribbon cable to the upper A17 PCB P1 connector. This cable will route to Motherboard 2 PCB connector P17 when the Rear Panel is installed.
11. Attach the shorter ribbon cable to the lower A17 P2 connector. This cable will route to Motherboard 2 PCB connector P72 when the Rear Panel is installed.

Connector M-F Hex Standoffs

12. On the outside of the rear panel, use hex drivers to install the M-F hex standoffs onto the four (4) connectors mounted on the A17 PCB. There are eight (8) total connector standoffs to be added.
13. Use a 7 mm hex driver to add the hex M-F connector standoffs to the Serial I/O (top) and the External I/O connectors. Do not tighten.
    - Each connector is fastened to the Rear Panel Chassis Plate with two (2) 4×40 × 0.187 hex M-F threaded connector mounting standoffs.
14. Use a 3/16” hex driver to add the hex M-F connector standoffs to the IEEE 488.2 GPIB connector and the Dedicated GPIB connector. Do not tighten.
    - Each connector is fastened to the Rear Panel Chassis Plate with two (2) 4×40 × 0.650 hex M-F connector mounting standoffs that support stackable GPIB Test Cable Connectors.
15. When all standoffs are correctly threaded, tighten.

Next Steps

16. If there are other internal components to replace, follow the appropriate procedure step below.
17. To replace the Rear Panel Fan Assembly, skip ahead to Section 16-7, “Remove the Rear Panel Fan Assembly” on page 16-19.
18. To replace another assembly, skip to any of the following chapters:
    - Chapter 17 — Power Supply Module
    - Chapter 18 — Digital PCB Fan Assembly
    - Chapter 19 — MB1 and MB2 PCB Replacement Procedures
19. To re-install the Rear Panel, skip ahead to Section 16-10, “Installing the Rear Panel Assembly” on page 16-22.

16-7 Remove the Rear Panel Fan Assembly

Use this procedure to remove the Rear Panel Fan Assembly. In general, the only reason to remove the fan is to replace it.

Part and Applicability

- Rear Panel Fan Assembly, 330 mm Cable Attached – ND70074 – 62095-2 – No “A” Number
- This fan is used on all VNA models with any combination of options.

Identification

Use the figures in the first part of this chapter to identify the Rear Panel Fan Assembly and its mounting hardware:

- Figure 16-1, “Rear Panel Assembly – Outside – Panel Attached with Covers Off” on page 16-3 above shows the general location of components with the rear panel installed.
- Figure 16-2, “Rear Panel Assembly – Inside – A17 PCB Cable Connections” on page 16-5 above shows the cable connections between the A17 PCB and the Rear Panel and the Motherboard 2 PCB Assembly.
- Figure 16-3, “Rear Panel Assembly – Outside – A17 PCB and Fan Mounting Hardware” on page 16-7 above shows a view of the A17 PCB cabling connections with the rear panel removed.
- Figure 16-4, “Rear Panel Assembly – Inside View – Cable Connections” on page 16-9 above shows a view of the A17 PCB cabling connections with the rear panel removed.

Procedure

Prerequisites

1. The Rear Panel Assembly must be removed from the instrument chassis.
   - See Section 16-3 “Remove the Rear Panel Assembly” on page 16-2 above.

Disconnect Cables

2. The fan power cable is already disconnected from the Motherboard 2 PCB.
3. Route the power cable through the cable clip on the inside center of the Rear Panel.
4. On the inside of the Rear Panel, remove the #6 nut holding the ground strap in place. Bend the ground cable out of the way.

Remove the Fan Mounting Hardware

5. Hold the Rear Panel vertical, and from the outside, remove the four (4) pan head Phillips 6×32 × 0.750” screws holding the fan grill and fan onto the Rear Panel Assembly.
6. As the screws come out, be careful not to lose the flat washer, standoff, and vibration isolation grommet under each screw.
7. As the last screw comes out, the fan assembly can be removed from the chassis.

16-8 Preparing the Replacement Rear Panel Fan

Use this procedure to install the threaded spring clips and ground cable to the replacement fan.

Procedure

1. At each corner of the fan, remove the four (4) threaded spring clips.
2. Note the orientation of the threaded side of the clip.
3. Install the spring clips on the replacement fan, taking care to observe the correct airflow. The fan should pull air in from the Rear Panel and blow it towards the front panel.

16-9 Install the Rear Panel Fan Assembly

Use this procedure to install a replacement Rear Panel Fan Assembly.

Procedure

1. Place the fan loosely in position and route the power cable through the center cable clip.

Hardware Sequence

2. Make sure a vibration isolation grommet is in position in the Rear Panel at each corner of the fan.
3. Insert the screw through the grill, flat washer, standoff, vibration isolation grommet, and finally into the threaded spring clip mounted on the fan.
   - Grill
   - Flat Washer
   - Standoff
   - Vibration Isolation Grommet
   - Threaded Spring Clip
4. When all screws are correctly threaded, check the fan alignment is centered and that the airflow is from the rear towards the front.
5. Tighten all screws.

Ground Cable

6. On the inside of the Rear Panel, slide the ground cable ring lug over the screw and add the #6 nut. Tighten.

Next Steps

7. If there are other internal components to replace, follow the appropriate procedure step below.
8. To replace the A17 Rear Panel PCB Assembly, skip back to Section 16-4, “Remove the A17 Rear Panel PCB Assembly” on page 16-15 above.
9. To replace another assembly, skip to any of the following chapters:
   - Chapter 17 — Power Supply Module
   - Chapter 18 — Digital PCB Fan Assembly
   - Chapter 19 — MB1 and MB2 PCB Replacement Procedures
10. To re-install the Rear Panel, skip ahead to Section 16-10, “Installing the Rear Panel Assembly” on page 16-22.

16-10 Installing the Rear Panel Assembly

Use this procedure to install the Rear Panel Assembly after either replacing the Rear Panel Fan, the A17 Rear Panel PCB Assembly, or after replacing an internal component.

Identification

Use the figures in the sections above to identify the relevant parts and components.

- Figure 16-1, "Rear Panel Assembly – Outside – Panel Attached with Covers Off" on page 16-3 shows the general location of components with the rear panel installed.
- Figure 16-2, "Rear Panel Assembly – Inside – A17 PCB Cable Connections" on page 16-5 shows the cable connections between the A17 PCB and the Rear Panel and the Motherboard 2 PCB Assembly.
- Figure 16-3, "Rear Panel Assembly – Outside – A17 PCB and Fan Mounting Hardware" on page 16-7 shows a view of the A17 PCB and fan mounting hardware.
- Figure 16-4, "Rear Panel Assembly – Inside View – Cable Connections" on page 16-9 shows a view of the A17 PCB cabling connections with the rear panel removed.

Procedure

Position the Rear Panel

1. Position the Rear Panel in approximate position against the instrument chassis.

Make Ribbon Cable Connections

2. Connect the lower A17 PCB P2 connector ribbon cable to the Motherboard 2 PCB P72 connector.
3. Connect the upper A17 PCB P1 connector ribbon cable to the Motherboard 2 PCB P71 connector.
4. Apply a tie wrap to the two ribbon cables to keep them in place.

Install the Rear Panel

5. Position the AC Module in place. Add the (4) outer flat head Phillips M3 × 6 mm screws that hold the AC Module Housing to the Rear Panel. When all are correctly threaded, tighten.
6. Position the Rear Panel Assembly against the chassis and using an 8 mm hex Allen driver, thread in the 12 cap socket Allen-head M4 ×10 mm screws that hold the Rear Panel Assembly to the instrument chassis.
7. Make sure all are correctly threaded.
8. Tighten in two passes, working each time from the center out.
9. Apply as required a cable tie to the AC Power Module cable harness.

Install the Rear Sub Plate

10. Place the Rear Panel Sub Plate in place against the Rear Panel Assembly and insert the 14 pan head Phillips M3 × 6 mm screw. Do not tighten.
11. Make sure all are correctly threaded.
12. Tighten in two passes, working each time from the center out.

Completion Procedures

13. Install the Inner Cover.
    - See Section 7-7 "Common - Install Inner Cover" on page 7-15.
14. Install the Outer Cover.
    - See Section 7-8 "Common - Install Outer Cover" on page 7-16.
15. Tighten the four handle screws.

Chapter 17 — Power Supply Module

17-1 Introduction

This procedure describes how to remove the Power Supply Module from the instrument chassis, and if required, replace it, and finally install it. Use this procedure to either replace the module, or to remove it from the chassis in order to service the deeper dwelling components:

- Digital PCB Fan Assembly – ND70073 – 62095-1
- Motherboard 1 PCB Assembly – ND70069 – 61920-3

17-2 Power Supply Module Overview

The Power Supply Module must be matched with the installed Motherboard 2 PCB and the installed Digital PCB assemblies.

Parts and Applicability

- Power Supply Module – ND70072 – 62088
  - For all VNAs with S/N 1132241 and lower.
  - Includes Power Supply Cable Assembly – 3-70258
  - Requires Phase 1 Motherboard 2 PCB – ND70070 – 61923-3
  - Compatible with all Phase 1 instrument models with any combination of options.
- Power Supply Module – ND73933 – 71995
  - For all VNAs with S/N 1133242 and higher.
  - Includes Power Supply Cable Assembly – 3-71996
  - Includes 3.3 Volt Sense Cable Assembly – 3-67873
  - Requires Phase 2 Motherboard 2 PCB Assembly – ND73878 – 3-72813-3
  - Compatible with all Phase 2 instrument models with any combination of options.

The mechanical removal and installation of the two Power Supply Modules is the same. The cabling is slightly different between the Phase 1 and the Phase 2 modules.

Identification - Location

The Power Supply Module Assembly and its three major cable harnesses are mounted in the Digital PCB Section near the left front of the instrument chassis as shown in Figure 17-1 below.

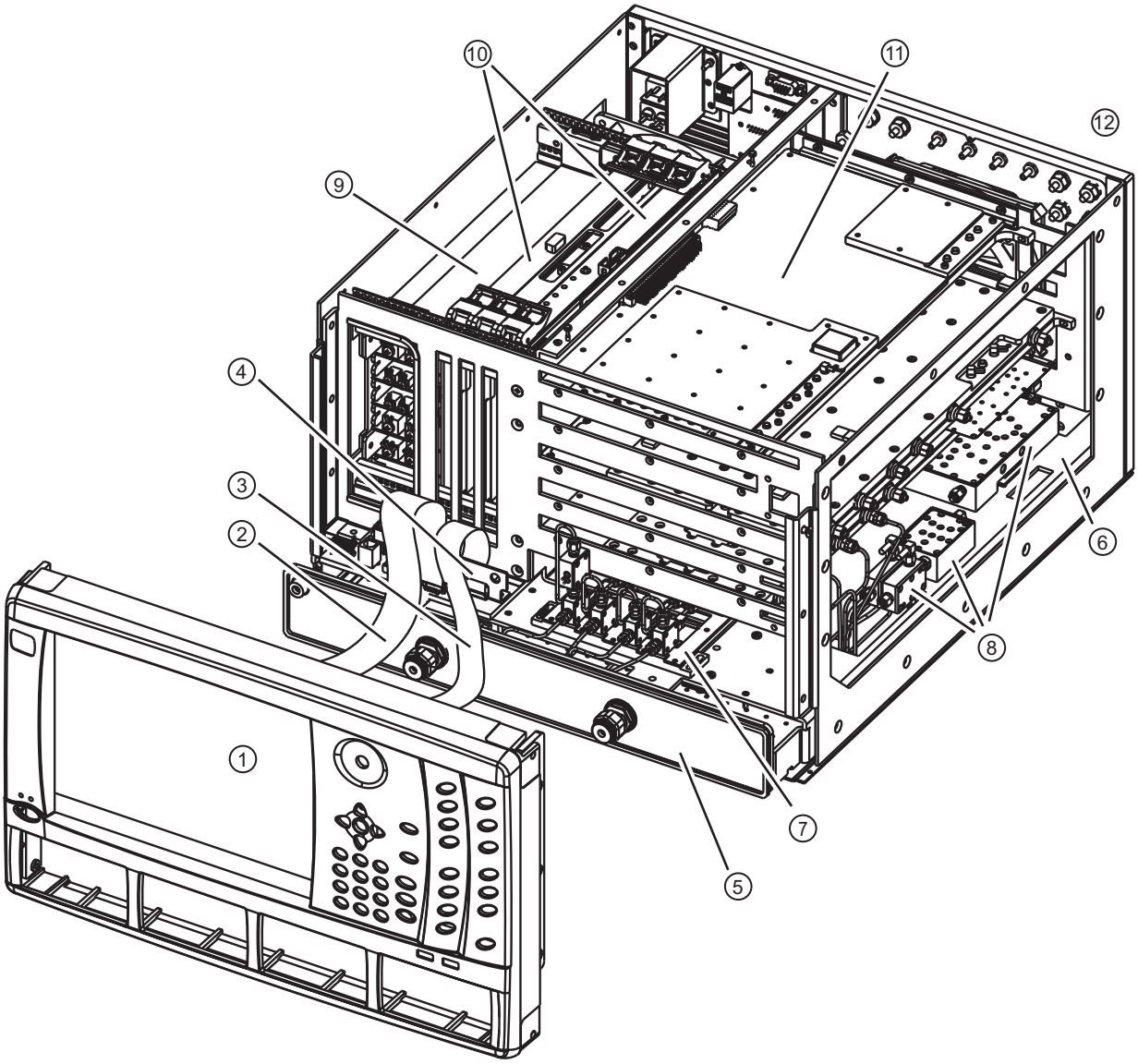

Figure 17-1. Power Supply Module Location and Orientation – Phase 1 VNA Shown (1 of 2)

Front Panel – Phase 1 Shown

1. Front Panel
   - Note that the Phase 2 Front Panel has three (3) cables that are not included with the replacement kit: HDMI, USB, and Power/Signal. Each cable is detachable from the VNA and the Front Panel.
2. Phase 1 Front Panel Ribbon Cable
   - Cable is permanently attached to the Front Panel
3. Phase 1 Front Panel Flex PCB Cable
   - Cable is permanently attached to the Front Panel
4. Phase 1 Front Panel Flex PCB Cable Zero Insertion Force (ZIF) Connector

RF Deck

5. RF Deck Front Panel
   - Standard No Options example shown.
6. RF Deck inside chassis.

SLODM Assembly

7. Sampler/LO Distribution Module (SLODM) Assembly
   - The SLODM components vary depending on the instrument S/N and the equipped options.
   - A111 LO Distribution Module
   - A100, A101, A102, A103 Sampler Modules, mounted on the A111.
   - If present, A130 Coupler Module mounted on either the A100 or the A101.
   - If present, A131 LO Coupler Module mounted on the A101.
   - If present, A132 LO Coupler Module mounted on the A103.

Major Components

8. RF Deck Top Right Side Modules
9. Power Supply Module
   - Phase 1 VNAs – ND70072 – 62088 – with Cable 3-72058
   - Phase 2 VNAs – ND73933 – 71995 – with Cables 3-71996 and 3-67873
10. Digital PCB Assemblies
11. Analog Module PCB Assemblies

Rear Panel

12. Rear Panel

Figure 17-1. Power Supply Module Location and Orientation – Phase 1 VNA Shown (2 of 2)

Identification – Phase 1 Power Supply Module – ND70072 – 62088

The Phase 1 Power Supply Module has three attached cable harnesses for power, power control, and the AC Line Input modules.

The power harness and control harness (not shown in Figure 17-2 below) go to the Motherboard 2 PCB Assembly – ND70070 – 61923-3. The third harness goes to the Rear Panel and the AC Input Module Assembly. The harnesses are supplied with the replacement part and do not need to be transferred between the to-be-replaced and new units.

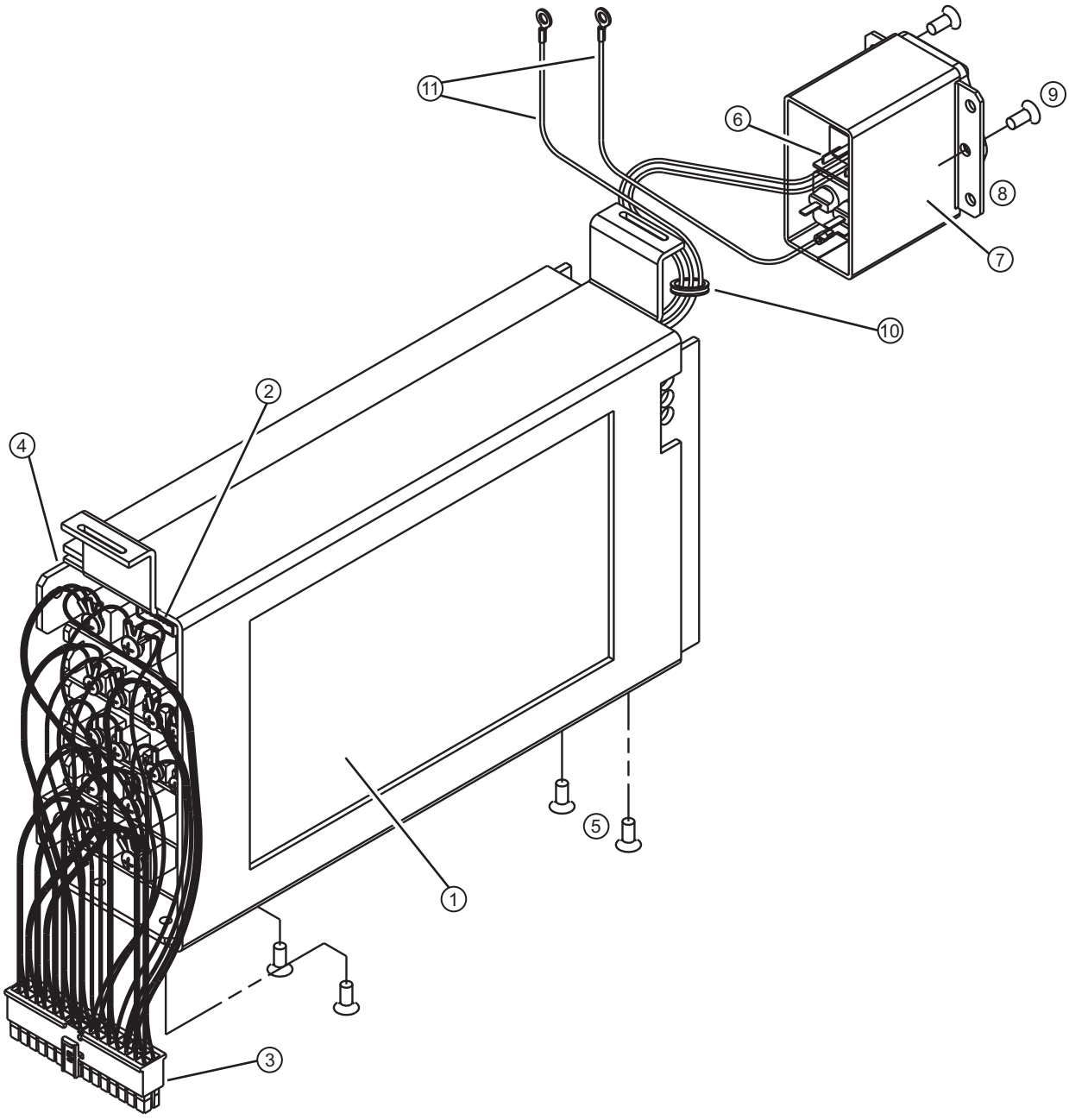

Figure 17-2. Phase 1 Power Supply Module Assembly – ND70072 – 62088 (1 of 2)

1. Power Supply Module Assembly – ND70072 – 62088 – With Cable 3-72058.
2. Power control wiring harness (not shown here) to MB2 PCB connector Pwr Ctrl P93.
   - Not a replacement part.
3. Power Supply Cable Assembly – 3-72058
   - Connects to Phase 2 Motherboard 2 PCB Assembly at Connector P94.
   - Harness connections to Power Supply Module shown below in Figure 17-3.
   - Included in the ND70072 replacement module above.
4. Power Supply Mounting Chassis
5. Four (4) flat head Phillips M8 × 8 screws holding the module into its chassis. AC Input Module – Connections to the Power Supply Module are shown below in Figure 17-6.
6. AC Input Power Supply Module (inside bracket).
   - Connections to the Power Supply Module are shown below in Figure 17-6‘.
7. AC Module Mounting Bracket
8. Four (4) flat head Phillips M3 x 8 mm screws.
   - When viewed from the Rear Panel, these screws are in the corners of the AC Module where they hold the AC Module into its Bracket Assembly.
   - These screws do not need to be removed.
9. Two (2) flat head Phillips M4 x 8 mm screws which hold the AC Module Bracket Assembly to the Rear Panel.
   - When viewed from the Rear Panel, these screws are in the middle of the AC Module Bracket Assembly
   - They must be removed to later remove the Power Supply Module.
10. Grommet holding harness wires.
11. Green/Yellow Stripe wires for connection to chassis ground.

Figure 17-2. Phase 1 Power Supply Module Assembly – ND70072 – 62088 (2 of 2)

The main harness connections are to the front end of the Power Supply Module and are connected via pan head Phillips screws that hold the 30 color-coded harness wires with ring lugs. The replacement module comes with the harness installed.

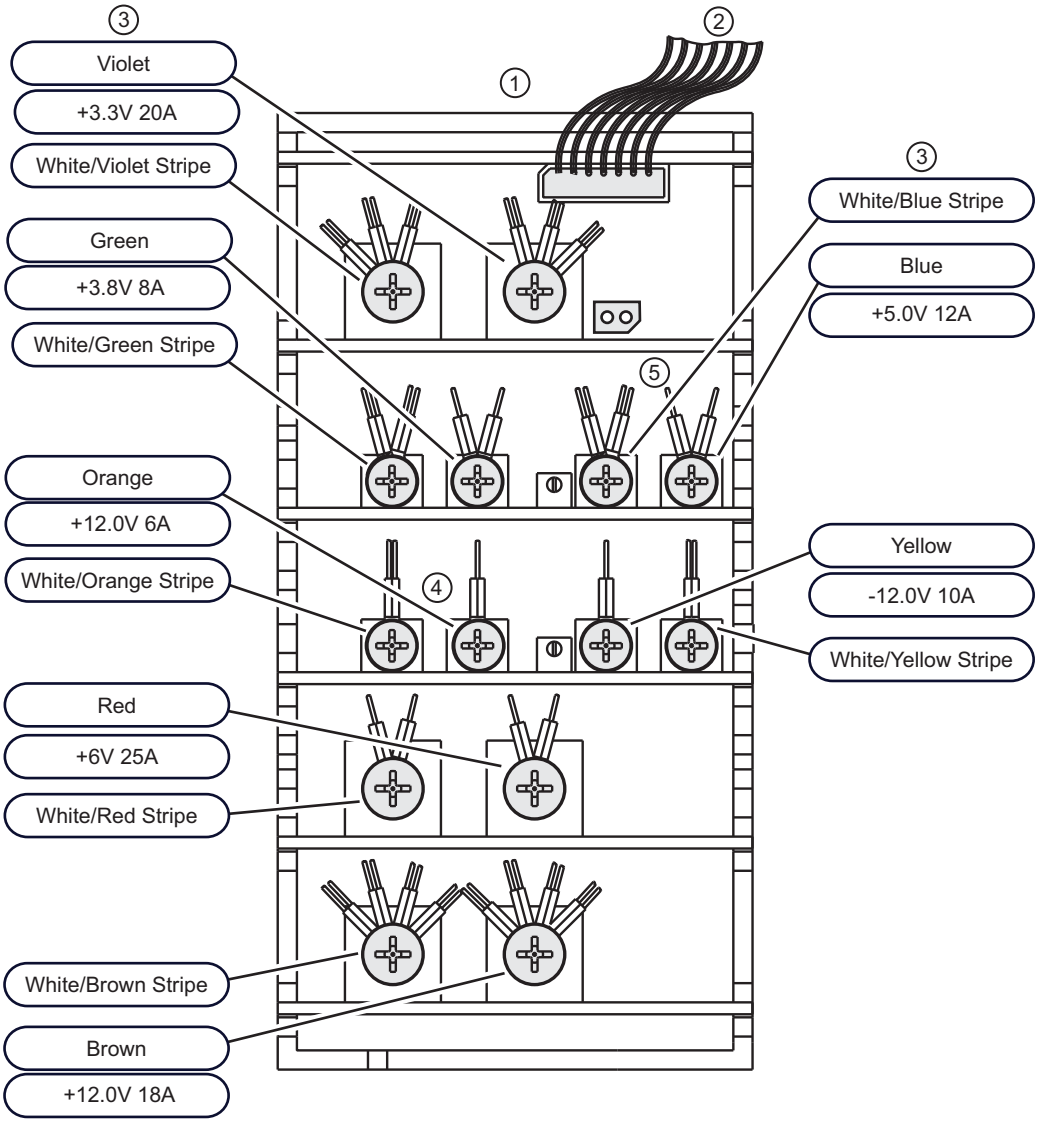

1. Power Supply Module Assembly – ND70072 – 62088
2. The 7-pin cable harness at the top front of the Power Supply Module connects to the P93 Power Control connector also on the front of the MB2 PCB.
   - This cable is not part of the ND70072 replacement module above.
3. Ring-lug terminated cables that connect to a 30-pin plug which in turn connects to the Motherboard 2 (MB2) PCB Assembly connector P94 Power In connector located on the front of the PCB.
4. Note that Phase 1 Orange and White/Orange Stripe terminals have only one (1) ring lug connection.
5. Note that Phase 1 Blue and White/Blue Stripe terminals have two (2) ring lug connections.
6. All other ring-lug connections are identical to Phase 2 connections.

Figure 17-3. Phase 1 Power Supply Module Wiring Harness Connections

Identification – Phase 2 Power Supply Module – ND73933 – 71995

The Phase 2 Power Supply Module has four (4) attached cable harnesses for power, power control, 3.3 VDC sense, and the AC Line Input modules.

The power harness, control harness (not shown in Figure 17-2 below) go to the Phase 2 Motherboard 2 PCB Assembly – ND73878 – 3-72813-3. The fourth harness goes to the Rear Panel and the AC Input Module Assembly. The harnesses are supplied with the replacement part and do not need to be exchanged between old and new units.

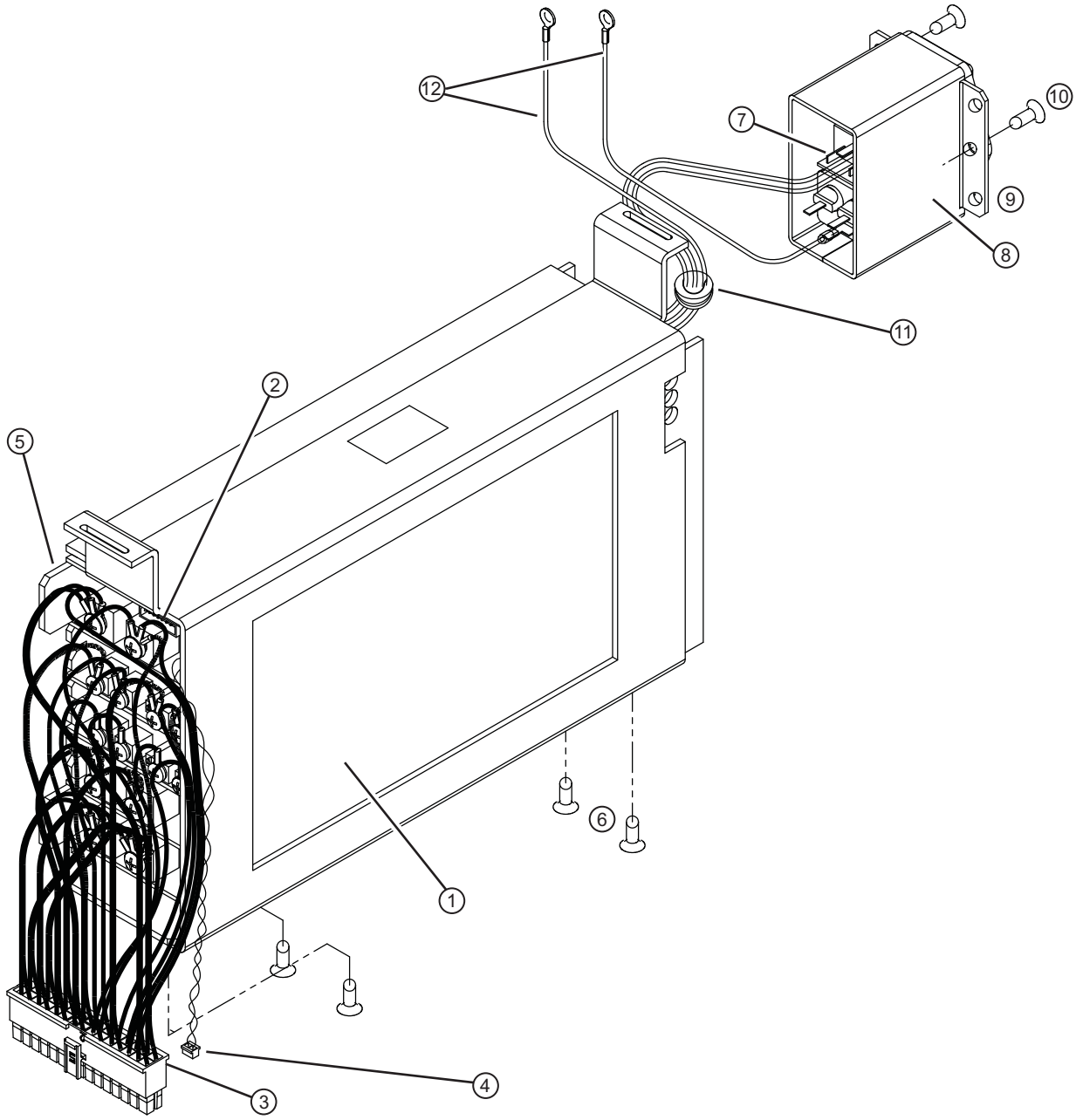

Figure 17-4. Phase 2 Power Supply Module Assembly – ND73933 – 71995 (1 of 2)

1. Phase 2 Power Supply Module – ND73933 – 71995 – With Cables 3-71996 and 3-67873.
2. Power control wiring harness (not shown here) to MB2 PCB connector Pwr Ctrl P93.
   - Not a replacement part.
3. Power Supply Cable Assembly – 3-71996
   - Connects to Phase 2 Motherboard 2 PCB Assembly at Connector P94.
   - Harness connections to Power Supply Module shown below in Figure 17-5.
   - Included in the ND73933 replacement module above.
4. 3.3 VDC Sense Cable – 3-67873
   - Connects to Phase 2 Motherboard 2 PCB Assembly at Connector P62.
   - Included in the ND73922 replacement module above.
5. Power Supply Mounting Chassis
6. Four (4) flat head Phillips M8 × 8 screws holding the module into its chassis.
7. AC Input Power Supply Module (inside bracket).
   - Connections to the Power Supply Module are shown below in Figure 17-6.
8. AC Module Mounting Bracket
9. Four (4) flat head Phillips M3 x 8 mm screws.
   - When viewed from the Rear Panel, these screws are in the corners of the AC Module where they hold the AC Module into its Bracket Assembly.
   - These screws do not need to be removed.
10. Two (2) flat head Phillips M4 x 8 mm screws which hold the AC Module Bracket Assembly to the Rear Panel.
    - When viewed from the Rear Panel, these screws are in the middle of the AC Module Bracket Assembly
    - They must be removed to later remove the Power Supply Module.
11. Grommet holding harness wires.
12. Green/Yellow Stripe wires for connection to chassis ground.

Figure 17-4. Phase 2 Power Supply Module Assembly – ND73933 – 71995 (2 of 2)

The main harness connections are to the front end of the Phase 2 Power Supply Module and are connected via pan head Phillips screws that hold the 30 color-coded harness wires with ring lugs. The replacement module comes with the 3-71996 and 3-67873 harnesses installed.

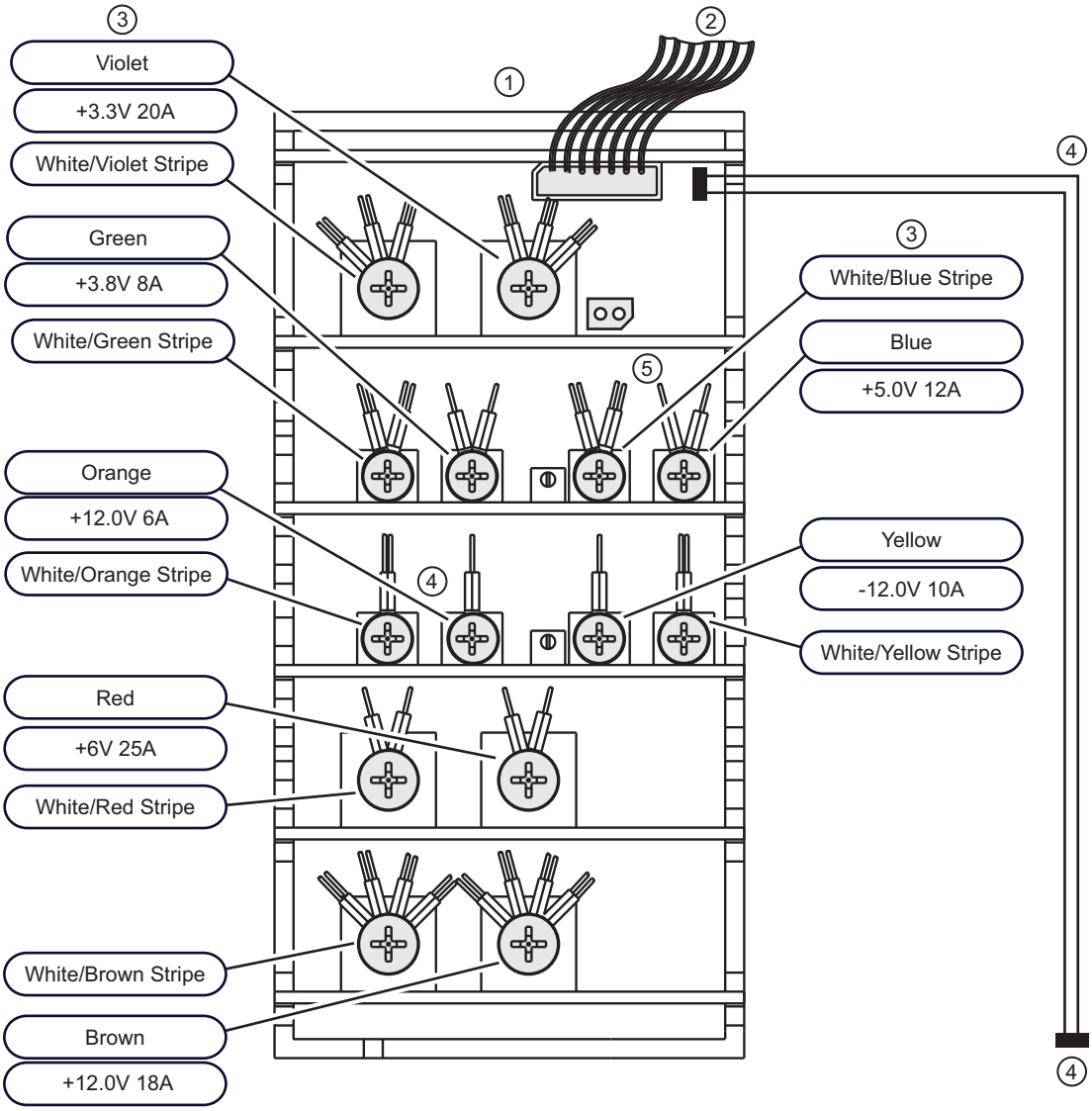

Figure 17-5. Phase 2 Power Supply Module Wiring Harness Connections (1 of 2)

1. Power Supply Module Assembly – ND73933 – 71995 – with Cables 3-71996 and 3-67873. 2. The 7-pin cable harness at the top front of the Power Supply Module. • Connects to the P93 Power Control connector on the front of the MB2 PCB. • This cable is not part of the ND73933 replacement module above. 3. Individual ring-lug terminated cables that connect to a 30-pin plug which in turn connects to the Motherboard 2 (MB2) PCB Assembly connector P94 Power In on the front of the PCB.	4. 3.3 Volt Sense Cable – 3-67873 • Connects to the P62 3.3 VD Sense connector on the front of the MB2 PCB. • This cable is part of the ND73933 replacement module above. 5. Note that Phase 2 Orange and White/Orange Stripe terminals have two (2) ring lug connections. 6. Note that Phase 2 Blue and White/Blue Stripe terminals have one (1) ring lug connections. 7. All other ring-lug connections are identical to Phase 2 connections.

Figure 17-5. Phase 2 Power Supply Module Wiring Harness Connections (2 of 2)

Identification - AC Line Input Module Connections

The AC Line Input Module connects via three (3) color coded wires with ring lugs to a barrier strip connector on the rear of the Power Supply Module. The AC Line Input Module, the AC Module Mounting Bracket, and the AC Module Harness comes with the replacement Power Supply Module

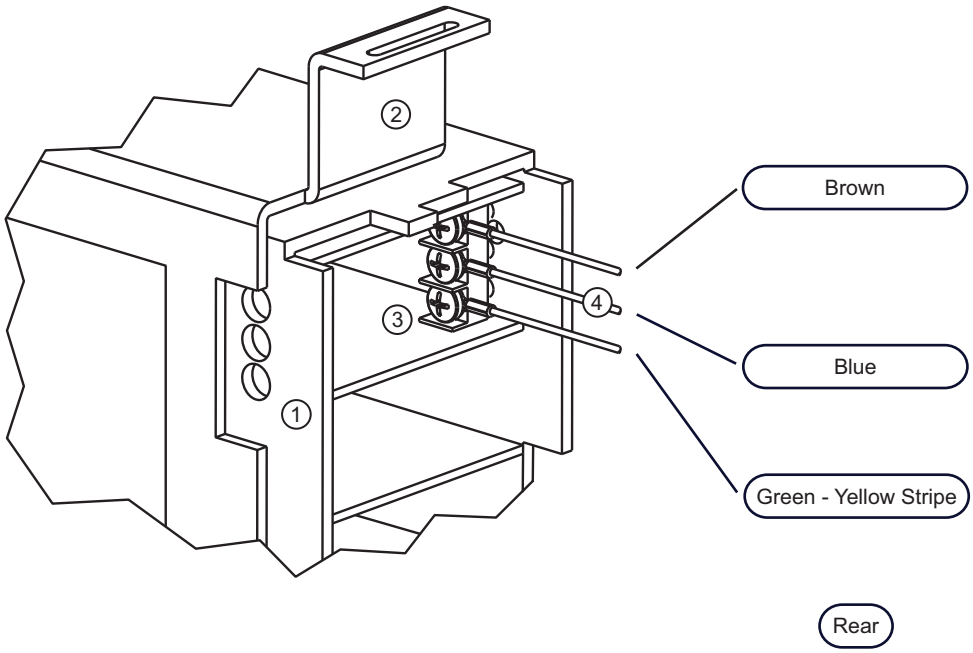

Orientation

Rear view of Power Supply Module and the cable connection detail between the Power Supply Module and the AC Line Input Module.

- For general location, see Figure 17-2, “Phase 1 Power Supply Module Assembly – ND70072 – 62088” on page 17-4 above for general location.
- The AC Line Module connections are the same for Phase 1 and Phase 2 VNAs.

Mechanical Components

1. Power Supply Module – ND70072 – 62088
2. Power Supply Module Mounting Bracket. The bracket and related hardware must be transferred from the old to the replacement Power Supply Module.

Cable Harness

3. Cable harness barrier strip.
4. Cable harness between the Power Supply Module and the AC Line Input Module. The replacement Power Supply Module comes equipped with the necessary harnesses so the harness do not need to be exchanged.

Figure 17-6. Power Supply Module Assembly – AC Line Module Connections

17-3 Remove the Power Supply Module

Parts and Applicability

- Power Supply Module – ND70072 – 62088
  - For all VNAs with S/N 1132241 and lower.
  - Includes Power Supply Cable Assembly – 3-70258
  - Requires Phase 1 Motherboard 2 PCB – ND70070 – 61923-3
  - Compatible with all Phase 1 instrument models with any combination of options.
- Power Supply Module – ND73933 – 71995
  - For all VNAs with S/N 1133242 and higher.
  - Includes Power Supply Cable Assembly – 3-71996
  - Includes 3.3 Volt Sense Cable Assembly – 3-67873
  - Required Phase 2 Motherboard 2 PCB Assembly – ND73878 – 3-72813-3
  - Compatible with all Phase 2 instrument models with any combination of options.

Procedure

Preparation Common Procedures

1. Prepare work area, work surface, and observe safety issues.
   - See Section 7-4 “Common - Prepare Work Area and Safety” on page 7-9.
2. Remove Outer Cover.
   - See Section 7-5 “Common - Remove Outer Cover” on page 7-10.
3. Position the instrument so that it is right-side up, RF deck down.
4. Remove Inner Top Cover.
   - See Section 7-6 “Common - Remove Inner Cover” on page 7-13.
5. Add blocking under front of instrument.
6. Remove and set aside the Front Panel.
   - See Section 10-6 “Install the Phase 1 Front Panel Assembly” on page 10-19.
7. Remove and set aside the Digital PCB Assemblies.
   - See Section 9-3 “Remove Digital PCB Assemblies” on page 9-7.
8. The RF Deck remains in the instrument.

Remove the Rear Panel Sub Plate

9. From the Rear Panel, remove and set aside the 14 pan head Phillips M3 × 6 mm screws holding the silk-screened Rear Panel Sub Plate in place. Work carefully to avoid scratching the sub plate.
10. Gently pull off the Rear Panel Sub Plate and set aside.

Remove the Left Side Chassis Panel

11. Remove the chassis left side plate mounting screws as shown in Figure 17-7.

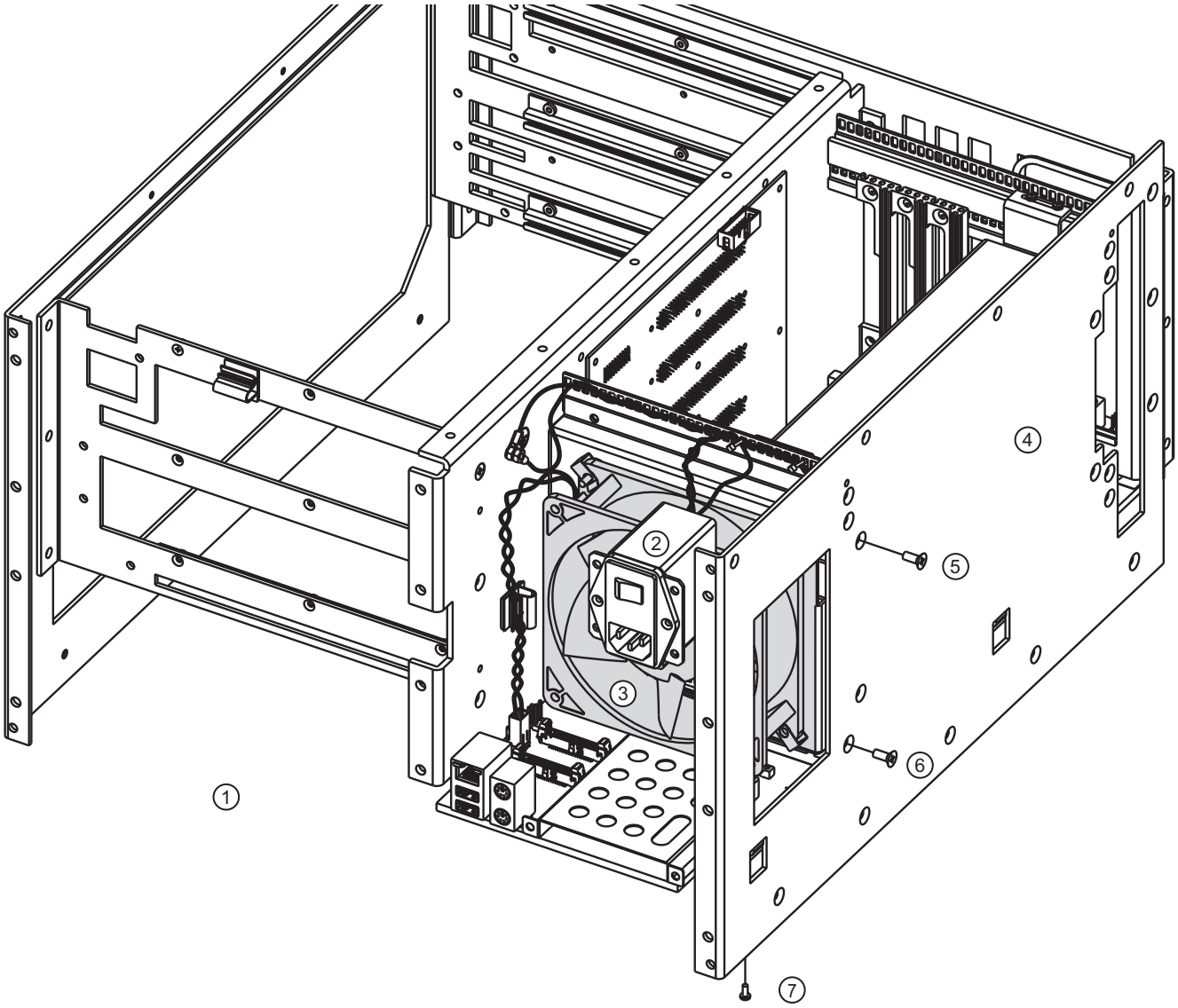

1. Rear Panel, removed here for clarity. 2. AC Input Module, removed from Rear Panel and left connected to Power Supply Module 3. Digital Section Fan assembly 4. Left side outer chassis plate, viewed from rear of instrument.	5. On side plate, seven (7) flat head Phillips M4 × 8 mm screws holding the Side Plate to the instrument chassis. 6. On side plate, seven (7) flat head Phillips M4 × 10 mm Digital PCB Fan Bracket Assembly and to the Power Supply Module Mounting Bracket. 7. On instrument bottom, remove the two (2) pan head Phillips M2.5 × 6 mm screws holding the side plate to the chassis.

Figure 17-7. Location of Left Side Screw and Rear Panel Screws

12. On the Rear Panel, on its right side, remove four (4) cap socket Allen head M4 × 10 mm screws using an 8 mm hex driver. The Rear Panel center and left side screws stay in place.

13. On the instrument left side, remove the seven (7) flat head Phillips M4 × 8 mm screws holding the Side Plate to the instrument chassis.

14. On the instrument left side, remove the seven (7) flat head Phillips M4 × 10 mm screws that hold the side plate to the Digital PCB Fan Bracket Assembly and to the Power Supply Module Mounting Bracket.

15. On the instrument bottom, remove the two (2) pan head Phillips M2.5 × 6 mm screws holding the side plate to the chassis.

16. Remove the side plate and set aside.

Disconnect Power Cables from Motherboard 2 PCB Assembly

17. At the instrument front, disconnect the Power Supply Module cables. The cables vary with the Power Supply Module version.

18. All Power Supply Versions: Remove the main power supply harness 30-pin connector from the Motherboard 2 (MB2) PCB Assembly P94 connector. Lift the lock tab to remove the connector.

19. All Power Supply Versions: Disconnect the power supply control harness 6-pin connector from the MB2 PCB P93 connector.The connector pulls straight up.

20. Phase 2 Power Supply – ND73933: Remove the 3.3 VDC Sense cable from the MB2 PCB P62 connector. The connector pulls straight up.

Disconnect AC Module from Rear Panel

21. At the Rear Panel, remove the two (2) center flat head Phillips M4 × 8 mm screws holding the AC Module Bracket Assembly to the Rear Panel.

- The outer four (4) screws hold the AC Module to the AC Module Bracket and can be left in place.
- The AC Module assembly is permanently wired to the Power Supply Module Assembly.
- Make sure the AC Module Bracket Assembly is loose.

22. Remove the two (2) M3 × 0.5 locking kep nuts holding the two (2) ring lugs to the chassis center plate. Each ring lug is attached to a Green wire with a Yellow Stripe.

Remove Power Supply Mounting Screws

23. On the top of the Power Supply Assembly, remove the four (4) pan head Phillips M2.5 × 10 mm screws holding the Power Supply Module Assembly in place on the chassis mounting rails.

Remove the Power Supply Assembly

24. Slide the Power Supply Module Assembly along with its mounting bracket and attached harnesses out the side of the Digital PCB Bay. Take care to route the attached harnesses and AC Module through the chassis openings.

Note	The replacement Power Supply Module comes with the necessary harnesses to connect directly to the MB2 PCB, the AC Line Input Module Assembly, and its AC Module harness. • Power Supply Module – ND70072 – 62088 – For all VNAs with S/N 1132241 and lower. Includes Power Supply Cable Assembly – 3-70258 • Power Supply Module – ND73933 – 71995 – For all VNAs with S/N 1133242 and higher. Includes Power Supply Cable Assembly – 3-71996 and 3.3 Volt Sense Cable Assembly – 3-67873. There is no need to transfer the Power Supply Module harnesses from the to-be-replaced assembly to the new assembly.

17-4 Prepare the Replacement Power Supply Module

Use this procedure to move the Power Supply Mounting Bracket and related hardware from the to-be-replaced Power Supply Module and transfer it to the new replacement module.

Procedure

1. Remove the four (4) flat head M3 × 8 mm screws holding the bracket to the to-be-replaced Power Supply Module. See Figure 17-2, “Phase 1 Power Supply Module Assembly – ND70072 – 62088” on page 17-4 above.
2. Install the bracket on the replacement Power Supply Module with four (4) screws on the bottom of the bracket.
3. Follow the installation procedure below. The rest of the installation procedure is the reverse of the removal procedure above.

17-5 Install the Power Supply Module

Use this procedure to install the Power Supply Module into the instrument chassis if it was removed for replacement or to access a deeper dwelling component.

Procedure

Assumptions

1. If a replacement unit, it is assumed that the Power Supply Mounting Bracket and related hardware have been installed on the new unit.
2. Insert the Power Supply Module into the chassis, positioning the cable harnesses and the AC Module as it slides in. Make sure the front power harnesses are fed through the chassis openings as the module is placed in the chassis.
3. Insert and tighten the screws into the chassis mounting rails.

Rear Panel and AC Line Module

4. Position the AC Line Module Assembly in the Rear Panel. Then insert and tighten the two (2) center flat head Phillips M4 × 8 mm mounting screws.

Motherboard 2 PCB and Ground Connections

5. Position the main power harness on the Motherboard 2 P94 connector and then push it in to connect until the latch clicks into place.
6. Position the power control harness on the Motherboard 2 P93 connector and then push it in to connect.
7. Check all connections and mounting hardware.
8. Position the two (2) ring lugs (green wire with yellow stripes) over the chassis center plate threaded mounting stud. Add the two (2) M3 × 0.5 locking kep nuts and tighten.

Chassis Side Plate and Rear Panel

9. Position the Chassis Left Side Plate and then insert and thread the seven (7) flat head Phillips M4 × 8 mm screws. Do not tighten.
10. At the right side of the Rear Panel, insert and thread the (4) cap socket Allen head M4 × 10 mm screws. Do not tighten.
11. At the instrument bottom, insert and thread the two (2) pan head Phillips M2.5 × 6 mm screws. When correctly threaded, tighten.
12. At the Chassis Left Side Plate, tighten the seven (7) screws.
13. At the Rear Panel, tighten the four (4) cap socket Allen head M4 × 10 mm screws. Then tighten the Power Supply Module and Digital Fan Assembly mounting screws.

Rear Panel Sub Plate

14. Install the Rear Panel Sub Plate and loosely thread the 14 each M3 x 6 mm pan head Phillips screws that hold the Rear Panel Sub Plate to the Rear Panel.
15. Starting at the center and working towards the panel edges, tighten the screws in two passes.

Completion Procedures

16. Add blocking under the front of the instrument.

17. Install the Front Panel Assembly.

- Section 10-6, “Install the Phase 1 Front Panel Assembly” on page 10-19

18. If removed, install the digital PCBs.

- See Section 9-12 “Location of Right Side Analog Module Assemblies” on page 9-26.

19. Install the Inner Top Cover.

- Section 7-7 “Common - Install Inner Cover” on page 7-15

20. Install the Outer Cover.

- Section 7-8 “Common - Install Outer Cover” on page 7-16

Chapter 18 — Digital PCB Fan Assembly

18-1 Introduction

This chapter describes how to remove and replace the fan that cools the Digital PCB Bay. This fan is termed the “Digital PCB Fan Bracket and Card Guide Assembly” and consists of the fan, brackets, card guides, and related mounting hardware. The fan airflow is from the rear of the instrument, through the Digital PCB Bay, and out through the front or sides of the instrument.

Remove the complete Digital PCB Fan Bracket Card Guide Assembly in order to replace the fan or to provide access for removing the Motherboard 1 PCB Assembly.

Digital PCB Fan Assembly Removal

The general fan removal procedure involves removing almost all of the major instrument components, removing the instrument chassis left side plate, and finally removing the Digital PCB Fan Bracket and Card Guide Assembly. Once the Digital PCB Fan Bracket and Card Guide Assembly has been removed, it can be disassembled to access the fan for replacement.

Digital PCB Fan Assembly Power Connector

The fan power harness plugs into the Motherboard 2 PCB Assembly P96 Digital Fan header connector near the rear edge of the PCB.

Digital PCB Fan Assembly Replacement Preparation Procedure

In order to replace the Digital PCB Fan, the fan must be divested of its attached card guide and bracket. Note that the replacement fan does not come with any mounting hardware or brackets. All removed components must be installed on the new replacement fan.

18-2 Remove the Digital PCB Fan Bracket/Card Guide Assembly

Use this procedure to access and remove the Digital PCB Fan Bracket/Card Guide Assembly.

Part and Applicability

- Digital PCB Fan Assembly – ND70073 – 62095-1
- This assembly is used on all VNA Phases and instrument models with any combination of options.
- The replacement part comes with a permanently attached 165 mm two-wire harness terminated in a 2-pin header connector.
- The fan airflow direction must be observed during installation so that it pushes air from the rear panel into the Digital PCB Bay towards the front.
- The replacement part does not include any mounting brackets or hardware. The brackets and hardware must be installed on the replacement fan.
- The Digital PCB Fan is electrically and form-factor identical to the Rear Panel Fan. Note that the Rear Panel Fan has a longer 330 mm power cord.

Identification

The figure below shows the fan and harness.

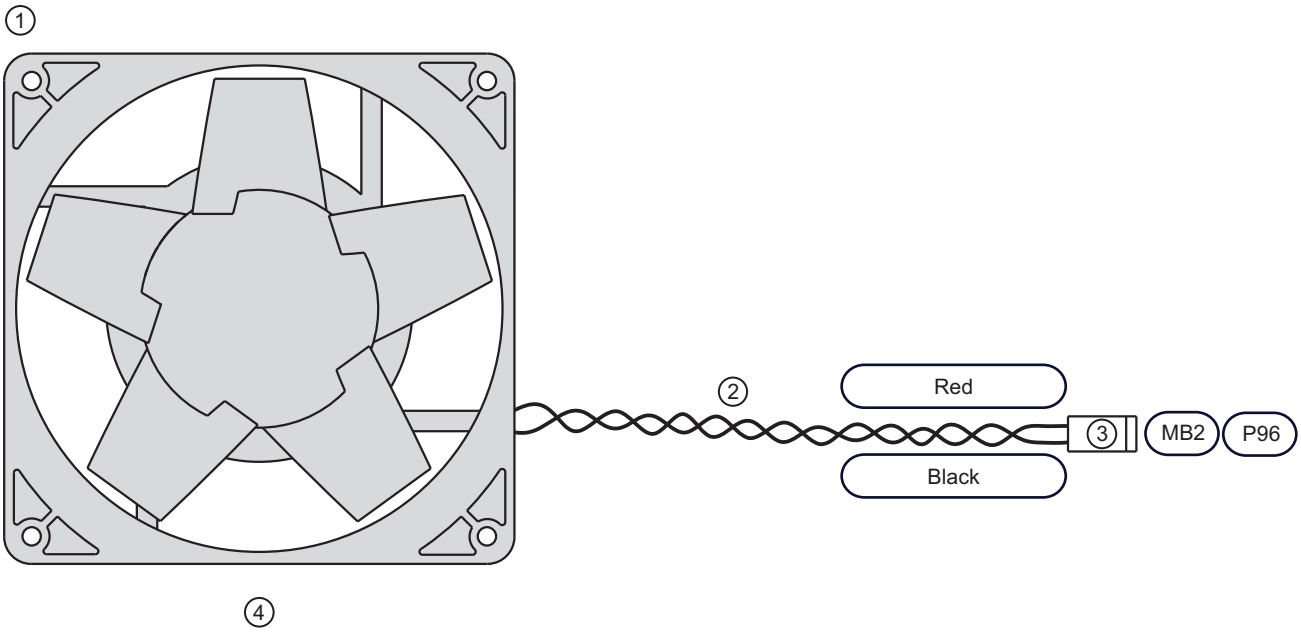

1. Digital PCB Fan Assembly 2. Permanently attached 185 mm long 2-wire red/black twisted pair power harness.	3. Attached harness 2-pin header connector. • Connects to the Motherboard 2 PCB Assembly connector P96 located near the rear of the PCB. 4. The Rear Panel Analog Fan is the same part with a 330 mm long 2-wire red/black twisted pair power harness and connector.

Figure 18-1. Digital PCB Fan Assembly – ND70073 – 62095-1 – Detail

Procedure

Orientation

1. Use Figure 18-2 below to identify the Digital PCB Fan Assembly in the chassis top view and locate and identify the Digital PCB Fan Assembly, related brackets, and mounting hardware.

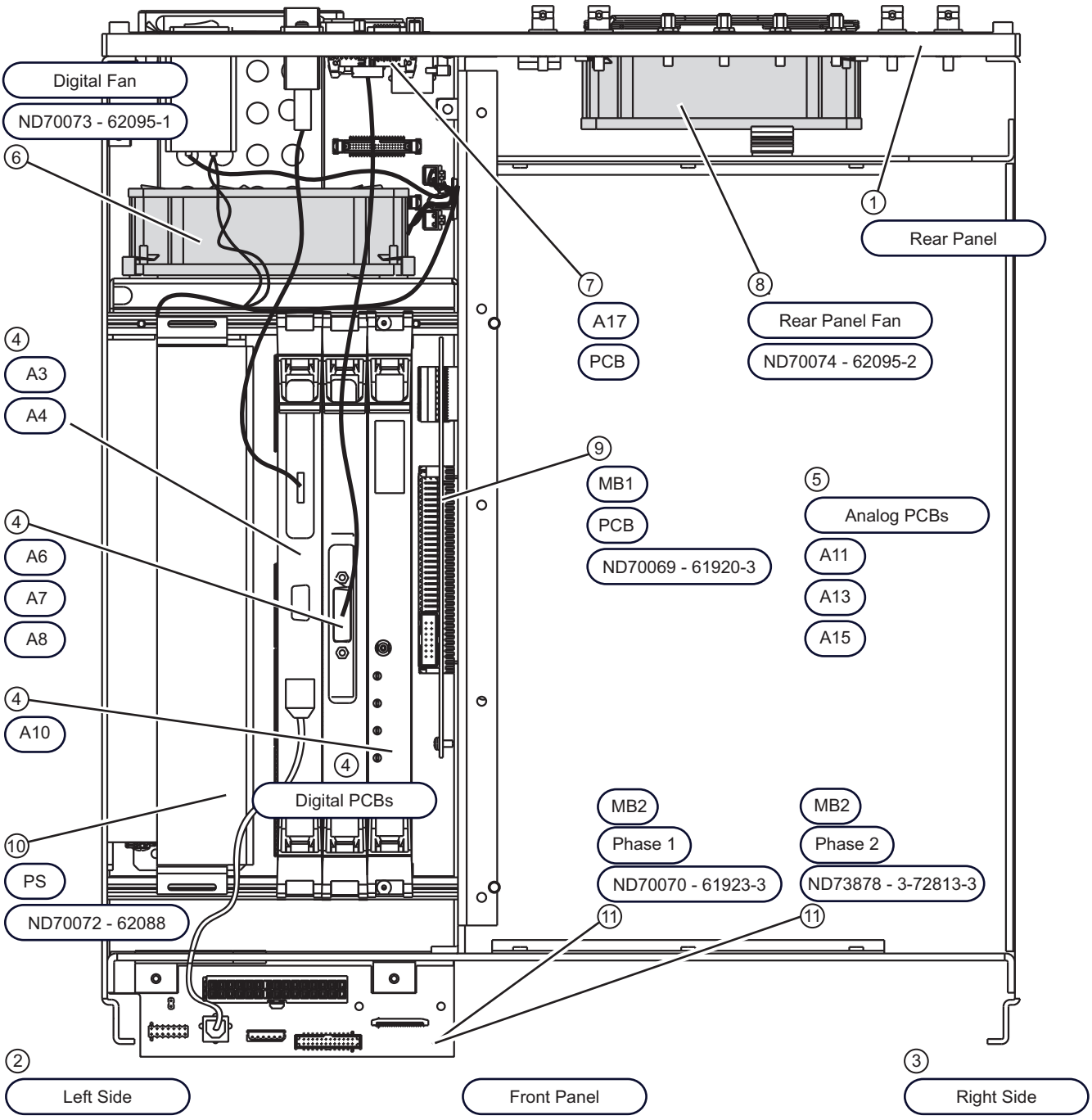

Figure 18-2. Digital PCB Fan Assembly – Chassis Location – Phase 1 Example (1 of 2)

Orientation

1. Rear Panel – Located at the top of this drawing.
2. Left Side – Left side of instrument when viewed from the Front Panel.
3. Right Side – Right side of instrument when viewed from the Front Panel.
4. Digital PCBs – PCBs mounted vertically in the left side digital PCB bay. They seat into the backplane connectors on the horizontally-mounted Motherboard 2 PCB Assembly.
   - A3 Single Board Computer PCB Assembly – ND70061.
   - A4 USB Controller PCB Assembly – ND70063. Mounted on A3.
   - A6 cPCI-PMC Adapter Card PCB Assembly – ND70063.
   - A7 Graphics Adapter Card PCB Assembly – ND70064. Mounted on A6.
   - A8 – A8 GPIB Module PCB Assembly – ND70065. Mounted on A6.
   - A10 – A10 Digital Signal Processing (DSP) Module PCB Assembly – ND70066.
5. Analog Modules – Modules mounted horizontally in the right side analog PCB bay. They seat into the backplane connectors on the vertically mounted Motherboard 1 PCB Assembly – ND70069 – 61920-3.
   - A11 IF Band Module – ND70076 – 62080
   - A13 Source Module – ND70077 – 62082
   - A15 Low Band Receiver Module – ND70075 – 62079
6. Digital PCB Fan Assembly – ND70073 – 62095-1 – Mounted in the Digital Section, with 165 mm cable harness and plug.
7. A17 Rear Panel PCB Assembly – ND70067 – 61924-3.
   - Located inside the Rear Panel Chassis Assembly.
   - The A17 PCB provides connectors for the Serial I/O, External I/O, IEEE 488.2 GPIB, and Dedicated GPIB Ports.
8. Rear Panel (Analog) Fan Assembly – ND70074 – 62095-2 – with 330 mm cable harness and plug.
9. Motherboard 1 PCB Assembly – ND70069 – 61920-3
   - This PCB seats into a backplane connector on the horizontally mounted Motherboard 2 PCB Assembly.
10. Power Supply Assembly and Cable Harnesses – ND70072 – 62088
11. Motherboard 2 PCB Assembly
    - Shown – Phase 1 version ND70070 – 61923-3
    - Not Shown – Phase 2 version ND73878 – 3-72813-3

Figure 18-2. Digital PCB Fan Assembly – Chassis Location – Phase 1 Example (2 of 2)

2. Use Figure 18-3 below to identify the chassis left side plate and the power supply module which must be removed to access the digital PCB fan and bracket assembly.

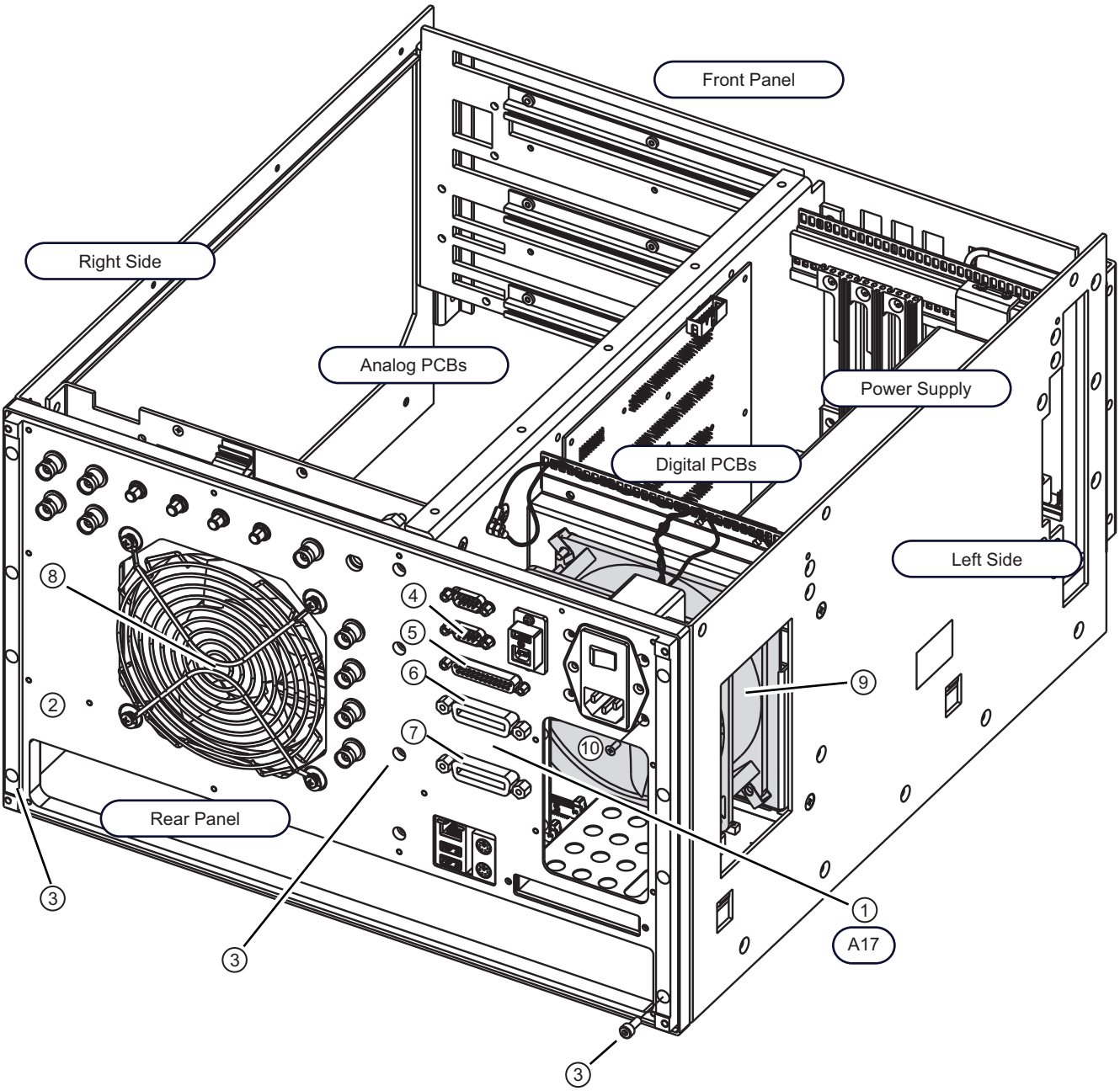

Figure 18-3. Digital PCB Fan Assembly – Major Component Location – Rear View (1 of 2)

Orientation	A17 Rear Panel PCB Assembly Connectors
The instrument chassis viewed from the Rear Panel with the covers off. **Rear Panel** 1. A17 Rear Panel PCB located here on the inside of Rear Panel. 2. Rear Panel Logo Sub Plate removed. The sub plate is fastened using 14 pan head Phillips M3 × 6 mm screws. It can be removed with the covers on or off. 3. Rear Panel Fastening Screws. The rear panel chassis is held to the rest of the instrument chassis using 12 socket head Allen M4 × 20 mm screws. There are three rows of four screws each at the left, center, and right.	4. Serial Connector port with two (2) 4×40 × 0.187 M-F connector mounting studs. 5. External I/O Control port with two (2) 4×40 × 0.187 M-F connector mounting studs. • The connector mounting studs here and above thread to standard DB connectors. • The studs must be removed to service the A17 PCB. 6. IEEE 488.2 GPIB port with two (2) 4×40 × 0.650 connector mounting studs. 7. Dedicated GPIB Port with two (2) 4×40 × 0.650 connector mounting studs. • The connector mounting studs here and above thread into standard stackable GPIB Test Cable Connectors. **Fan Assemblies** 8. Rear Panel (Analog) Fan Assembly. The Rear Panel must be removed to service the fan. 9. Digital Section Fan Assembly. The Rear Panel must be removed to service the fan.

Figure 18-3. Digital PCB Fan Assembly – Major Component Location – Rear View (2 of 2)

Common Procedures

3. Prepare work area, work surface, and observe safety issues.

- See Section 7-4, “Common - Prepare Work Area and Safety” on page 7-9.

4. Remove Outer Cover.

- See Section 7-5, “Common - Remove Outer Cover” on page 7-10.

5. Position the instrument so that it is right-side up, RF deck down.

6. Remove Inner Top Cover.

- See Section 7-6, “Common - Remove Inner Cover” on page 7-13.

7. Add blocking under rear of instrument.

8. Remove and set aside the Front Panel.

- To remove it, see:
  - Section 10-3 “Remove the Phase 1 Front Panel Assembly” on page 10-3
  - Section 10-4 “Remove the Phase 2 Front Panel Assembly” on page 10-11

Remove Digital PCBs

9. From the instrument top side, disconnect, remove, and set aside the digital PCB assemblies.

- See Section 9-3, “Remove Digital PCB Assemblies” on page 9-7.

10. For all VNAs, remove the A10 Digital Signal Processing Module PCB Assembly – ND70066 – 61933-3

11. For Phase 1 VNAs with S/N 1132241 and lower, remove the A3 Single Board Computer PCB Assembly – ND70061 – 3-2000-1525 or 3-59632. Mounted on the A3 PCB is the:

- A4 USB Controller PCB Assembly – ND70062 – 65412-4

12. For Phase 1 VNAs with S/N 1132241 and lower, remove the A6 cPCI-PMC Adapter Card PCB Assembly – ND70063 – 3-2000-1485. Mounted on the A6 PCB are the:

- A7 Graphic Adapter PCB Assembly – ND70064 – 3-2000-1517
    - A8 GPIB Module PCB Assembly – ND70065 – 3-2000-1485

13. For Phase 2 VNAs with S/N 1133242 and higher, remove the Carrier Board PCB (CB PCB) Assembly – ND73874 – 3-72444-3 – Mounted on the front CB PCB (unless otherwise noted) are the:

- Graphics Processor Unit (GPU PCB) PCB Assembly – ND73876 – 3-2000-1661 – Mounted on the back of the CB PCB.
- A4 USB Controller PCB Assembly – ND70062 – 65412-4
- A8 GPIB Module PCB Assembly – ND70065 – 65413-3
- Single Board Computer (SBC PCB) – ND73875 – 3-2000-1668
- Small Outline Dual In-line Memory (SODIMM) PCB Modules – No ND – 3-2000-1671 – Mounted on the SBC PCB.
- A10 Digital Signal Processing Module PCB Assembly – ND70066 – 61933-3

Remove Analog Modules

14. From the instrument right side, disconnect, pull out, and set aside the analog module assemblies.

- See Section 9-13, “Remove Right Side Analog Modules” on page 9-27.

15. This removes the:

- A11 IF Band Module – ND70076 – 62080 – Top
- A13 Source Module – ND70077 – 62082 or ND73202 – 62082-1 – Middle
- A15 Low Band Receiver Module – ND70075 – 62079 – Bottom

Remove RF Deck

16. Remove the RF Deck.

- See Section 14-2, “Remove the RF Deck” on page 14-1.

17. With the instrument chassis right side up, disconnect any remaining cables between the chassis components and the RF Deck components.

18. Best practices recommend removing any front panel loops (if equipped) and the rear panel loops.

19. Position the instrument upside down.

20. Remove the RF Deck by removing the hardware along its Bottom Side Center and on each side.

21. Lift the RF Deck up from the front, and then carefully slide out of the chassis.

22. Best practices recommend attaching a pair of T3545 RF Deck Fixtures to the deck to protect the loops and components.

Remove the Rear Panel Sub Plate

23. Remove the Rear Panel Sub Plate. The Sub Plate is the outer rear panel with the silk-screened port information.

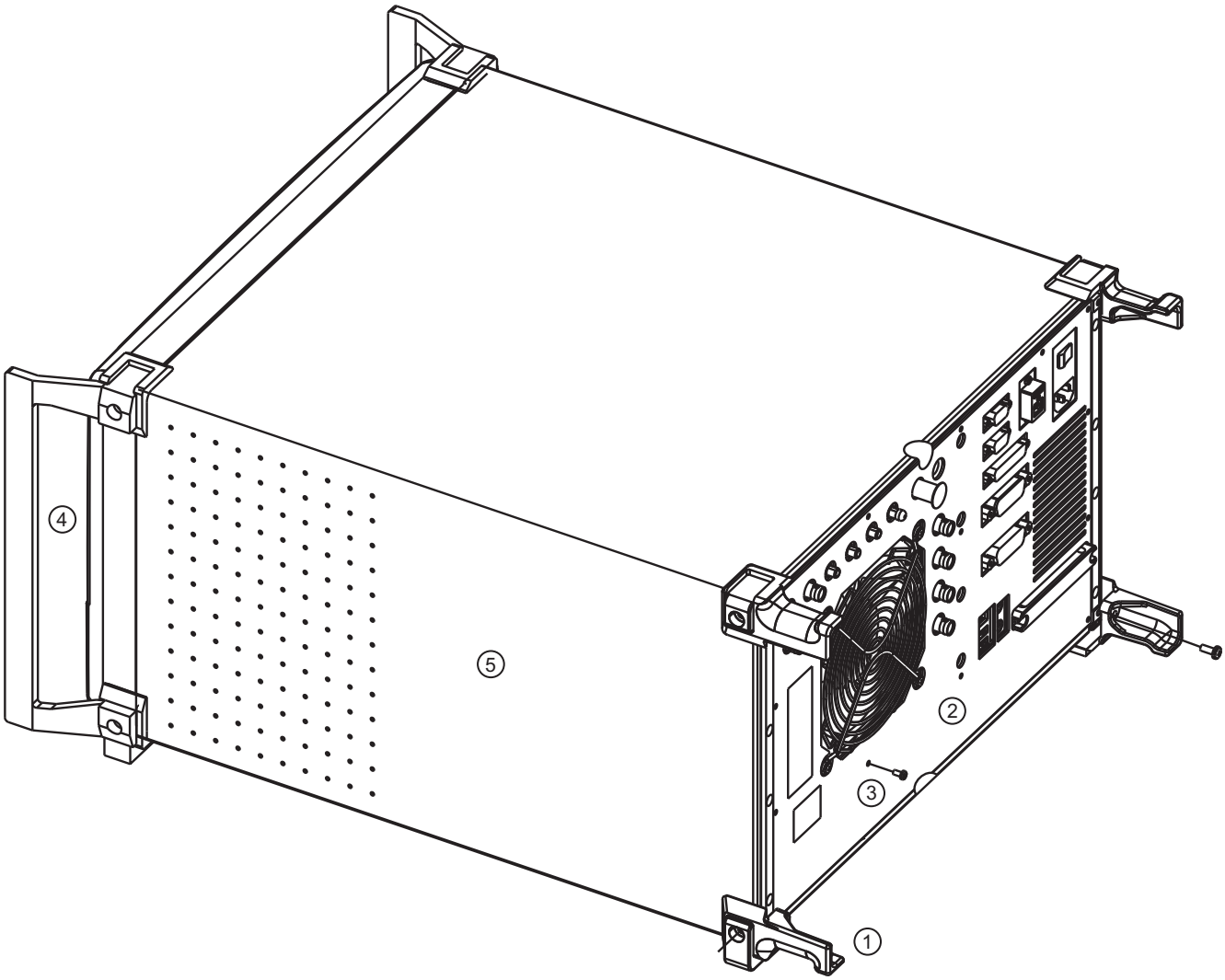

1. Rear Panel	4. Front Panel
2. Silk-screened Rear Panel Sub Plate	5. Covers shown on here. Best practices recommend removing the covers before using this procedure.
3. Rear Panel Sub Plate fastening hardware of 14 pan head Phillips M3 × 6 mm screws.	

Figure 18-4. Digital PCB Fan Assembly – Removing Rear Panel Sub Plate

24. Remove and set aside the 14 pan head Phillips M3 × 6 mm screw holding the sub plate in place.

25. Gently pull off the Rear Panel Sub Plate and set aside.

Note	Be careful handling the Sub Plate and do not scratch its surface.

Remove the Rear Panel Assembly

26. Remove the four (4) outer flat head Phillips M3 × 6 mm screws that hold the AC Module Housing to the Rear Panel. As the Rear Panel is removed, the AC Module Housing stays attached through its cable harness to the Power Supply Module.

27. Remove the Rear Panel Assembly. The Rear Panel Assembly is behind the Rear Panel Sub Plate and mounts the rear panel connectors, ports, PCB, and fan.

28. Using an 8 mm hex Allen driver, remove the 12 cap socket Allen-head M4 ×10 mm screws that hold the Rear Panel Assembly to the instrument chassis.

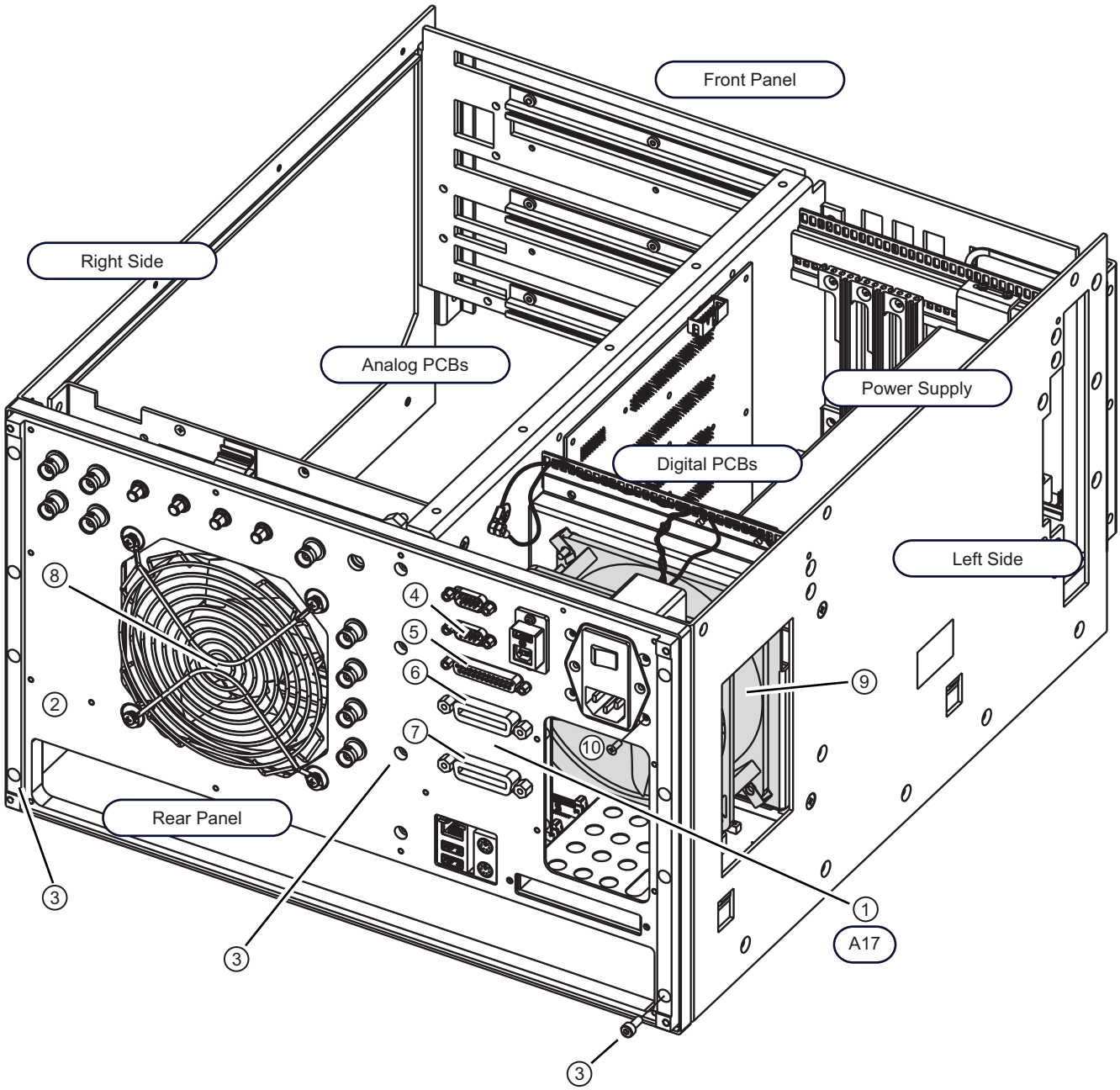

Figure 18-5. Remove or Install the Rear Panel Assembly (1 of 2)

Orientation Chassis viewed from the left rear corner of the instrument. **Components** 1. A17 Rear Panel PCB Assembly (not shown) located on inside of the Rear Panel Chassis Plate. 2. Rear Panel Chassis plate with silk-screened Rear Panel Sub Plate removed. 3. Rear Panel Chassis Plate fastening hardware of 12 cap socket Allen-head M4 × 10 mm screws arranged in three (3) rows of four (4) screws each.	**A17 Rear Panel PCB Connectors (top to bottom)** 4. Serial (10101) Port DB connector and its two (2) connector standoffs. 5. External I/O Port DB connector and its two (2) connector standoffs. 6. IEEE 488.2 GPIB Port connector and its two (2) connector standoffs. 7. Dedicated GPIB Port connector and its two (2) connector standoffs. **Rear Panel Components** 8. Rear Panel Fan Assembly and Grill. 9. Digital PCB Fan Bracket and Card Guide Assembly. 10. The two (2) middle flat head Phillips M4 × 8 mm screws holding the AC Input Module Assembly to the Rear Panel Chassis Plate.

Figure 18-5. Remove or Install the Rear Panel Assembly (2 of 2)

29. Pull the Rear Panel gently straight out, checking to make sure all of the Rear Panel cables have been disconnected

Remove the Chassis Left Side Plate

30. Once the Rear Panel Assembly is removed, use Figure 18-6 below for orientation on the removing the instrument chassis left side plate.

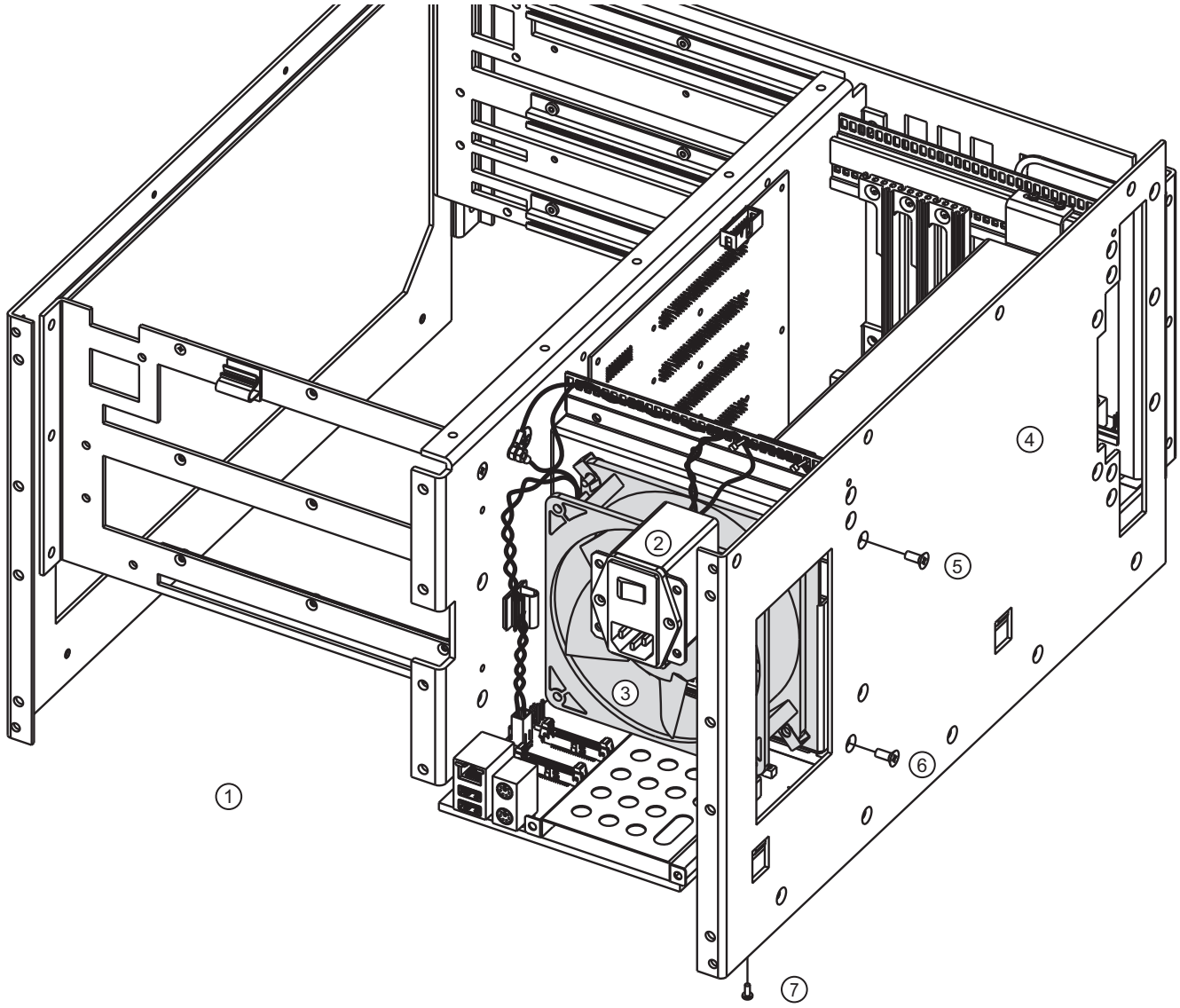

1. Rear Panel	6. Seven (7) flat head Phillips M4 × 10 mm screws for Side Plate to: • Digital PCB Fan Bracket/Card Guide Assembly (3 screws) • Power Supply Module Mounting Bracket (4 screws)
2. Power Supply AC Module Housing	7. Center two (2) pan head Phillips M2.5 × 6 mm screws holding the Side Plate to the instrument chassis.
3. Digital PCB Fan Assembly	
4. Instrument Chassis Left Side Plate	
5. Seven (7) flat head Phillips M4 × 8 mm screws holding the Side Plate to the instrument chassis.	

Figure 18-6. Remove or Install the Instrument Chassis Left Side Plate

Remove the Power Supply Module

31. Use Figure 18-7 below for orientation on removing the Power Supply Module.

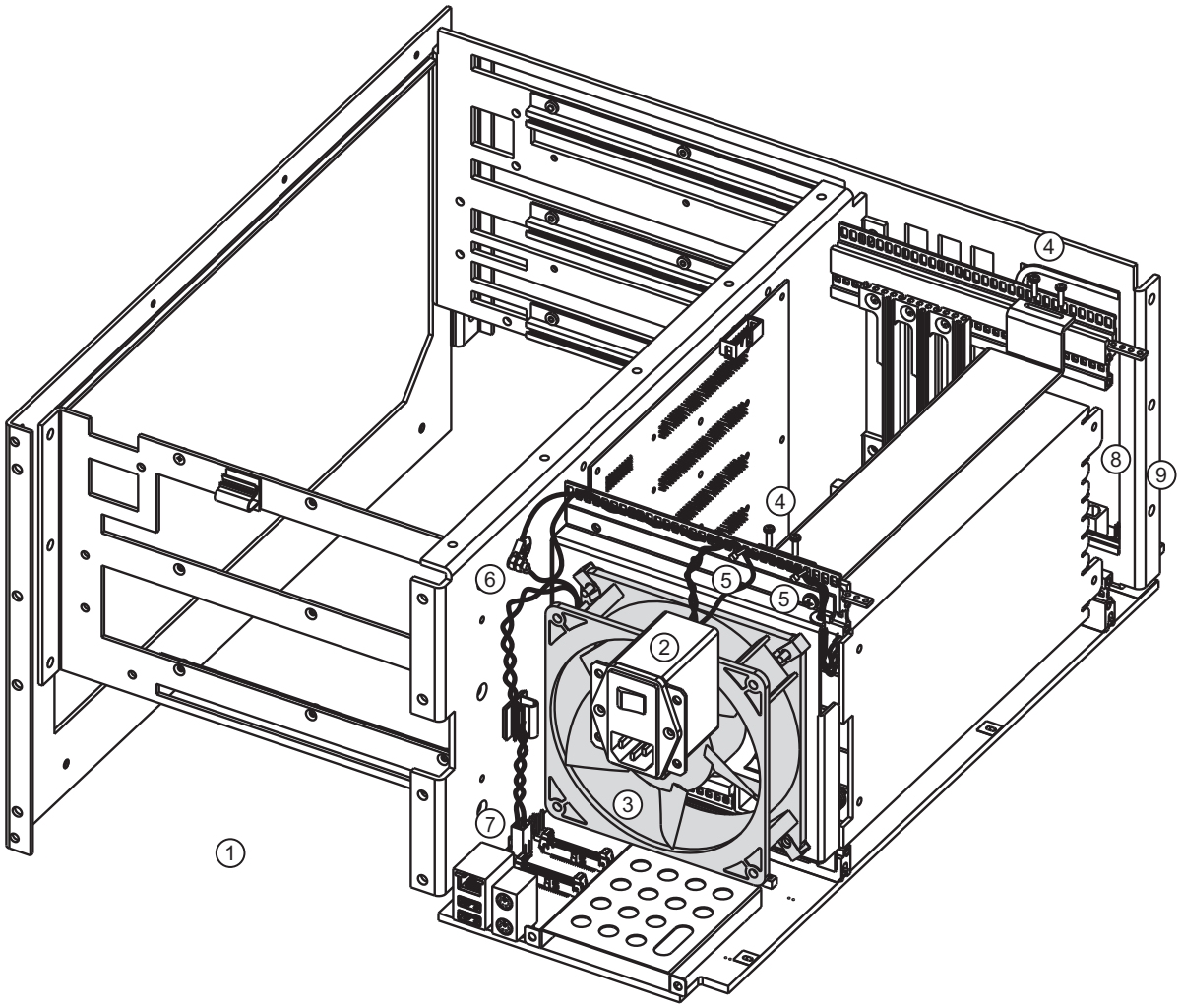

Orientation 1. Instrument rear **Assemblies** 2. AC Input Module Housing 3. Digital PCB Fan, Fan Bracket, and Card Guide Assemblies. 4. Four (4) pan head Phillips M2.5 × 10 mm screws holding the Power Supply Module Bracket into the card guide. 5. Cable ties holding the AC Input Module ground cables.	6. Ground post on the chassis center plate with ring lug cables from the Power Supply Module and the AC Input Module. See Figure 18-8 below for detailed view. 7. Digital PCB Fan power cable connected to Motherboard 2 PCB Assembly P96 connector. 8. Power Supply Module main power cable connected at chassis front to Motherboard 2 (MB2) PCB Assembly P94 PWR IN connector (partially shown). 9. Power Supply Control cable connected at chassis front to the MB2 PCB P93 PWR CTRL connector (not shown)

Figure 18-7. Remove or Install the Power Supply Module Assembly

32. At the front of the instrument, remove the main power supply cable from the Motherboard 2 PCB Assembly P94 31-pin connector.

33. At the front of the instrument, remove the power supply control cable from the Motherboard 2 PCB Assembly P93 header connector.

34. Remove the four (4) pan head Phillips M2.5 × 10 mm screws holding the Power Supply Module Bracket into the Card Guide Rails.

35. Remove the two (2) M3 × 0.5 kep nuts holding the power supply and AC module ground ring lugs in place on the chassis as shown below in Figure 18-8.

36. Remove the Power Supply Module Assembly.

- See Section 17-3, "Remove the Power Supply Module" on page 17-12.

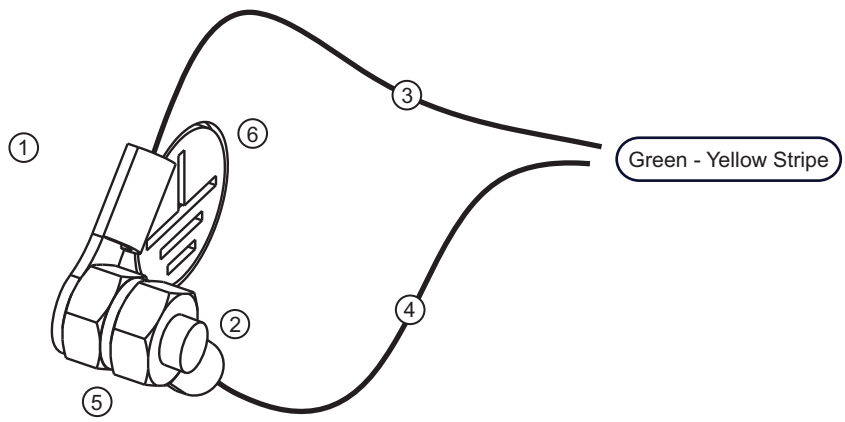

See Figure 18-7 above for orientation and position. 1. Chassis center plate. 2. Swagged-in threaded stud on chassis center plate. 3. Ring lug on green wire with yellow stripe from AC Line Module.	4. Ring lug on green wire with yellow stripe from Power Supply Module. 5. Two (2) M3 × 0.5 kep nuts. 6. Note that ring lugs and wires are dressed so that the ground symbol is clearly visible.

Figure 18-8. Disconnect or Connect the Power Supply Module Ground Cables

Disconnect the DC Fan Power Cable

37. Disconnect the DC Fan Power cable from the Motherboard 2 PCB Assembly P96 connector

- See Figure 18-7, "Remove or Install the Power Supply Module Assembly" on page 18-14 above for location of cable and MB2 connector.

Remove the DC Fan Bracket/Card Guide Assembly

38. Remove the DC Fan Bracket Assembly with the attached Card Guide Assembly from the chassis.

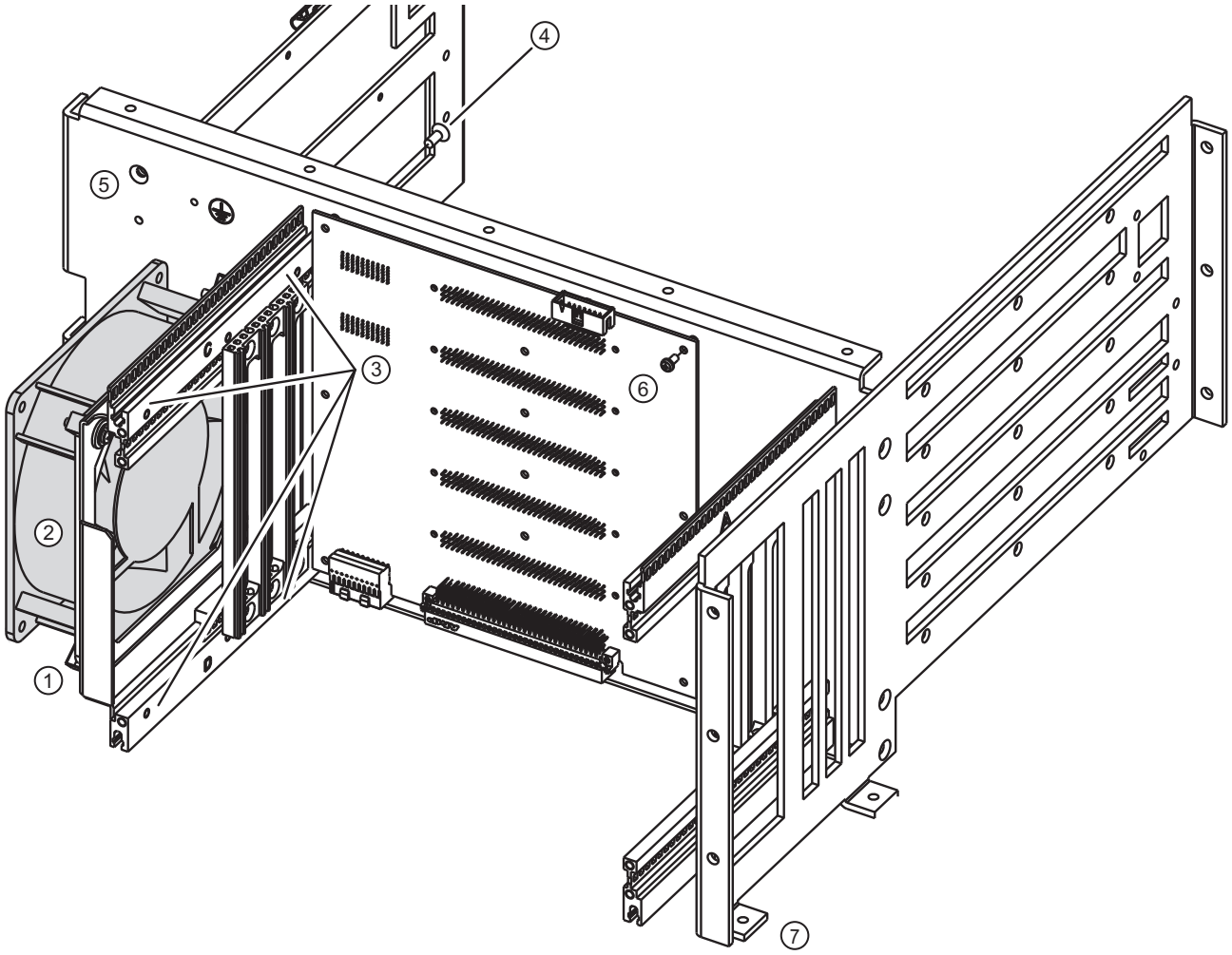

1. Instrument rear	5. Instrument chassis center plate.
2. Digital PCB Fan/Bracket Assembly	6. Motherboard 1 PCB Assembly fastened into place in the Digital PCB Bay. The vertically-mounted PCB backplane connectors protrude through center plate openings into the Analog PCB Bay.
3. Rear Digital PCB Card Guide Assembly	7. Instrument front
4. Eight (8) flat head Phillips M4 × 10 mm screws holding the Digital PCB Fan Bracket Assembly with the attached PCB Card Guide Assembly in place. Note that the fan assembly mounting screws are fastened from the Analog PCB Bay side of the chassis.	

Figure 18-9. Remove or Install the DC Fan Bracket/Card Guide Assembly

39. From the Analog PCB Bay, remove the eight (8) flat head Phillips M4 × 10 mm screws holding the Digital PCB Fan Assembly with attached PCB Card Guide Assembly in place.

40. Remove the assembly from the chassis.

Remove the DC Fan Bracket Assembly from the Card Guide Assembly

41. Disconnect the Digital PCB Fan Bracket Assembly from the Card Guide Assembly.

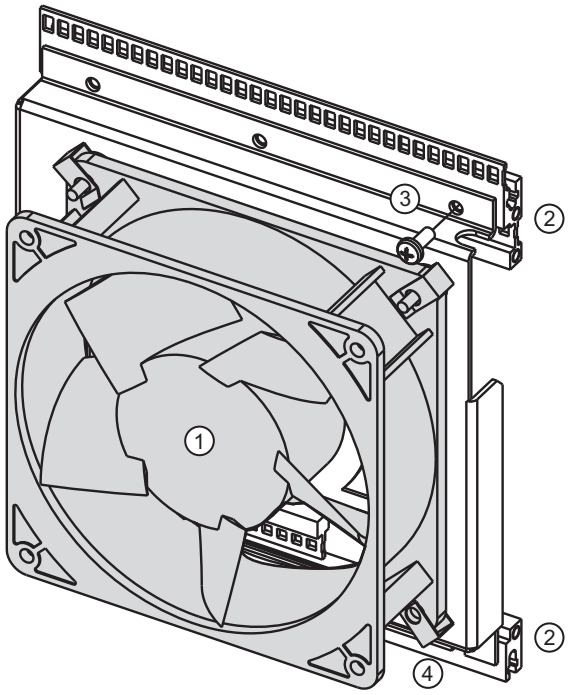

1. Digital PCB Fan Assembly 2. Rear Digital PCB Card Guide Assembly	3. Six (6) pan head Phillips M4 × 10 mm screws holding the Fan/Bracket Assembly to the Card Guide Assembly. 4. Threaded Spring Clip, 0.31” × 0.25”

Figure 18-10. Digital PCB Fan Bracket/Card Guide Assembly

Next Steps

42. At this point, use any of the following procedures in this or other chapters to service the appropriate component.

- Section 18-3, “Prepare the Replacement Digital PCB Fan Assembly” on page 18-18.
- Section 18-4, “Install the Digital Fan Bracket Card Guide Assembly” on page 18-23.

18-3 Prepare the Replacement Digital PCB Fan Assembly

Use this procedure to disassemble the Digital PCB Fan Assembly, and install the replacement fan.

Prerequisites

1. The Digital PCB Fan Assembly has been removed from the instrument chassis.
2. Remove the six (6) pan head Phillips M4 × 10 mm screws that hold the Digital PCB Fan and Bracket to the Card Guide Assembly. The appearance of the Card Guide Assembly is shown in Figure 18-11 below.

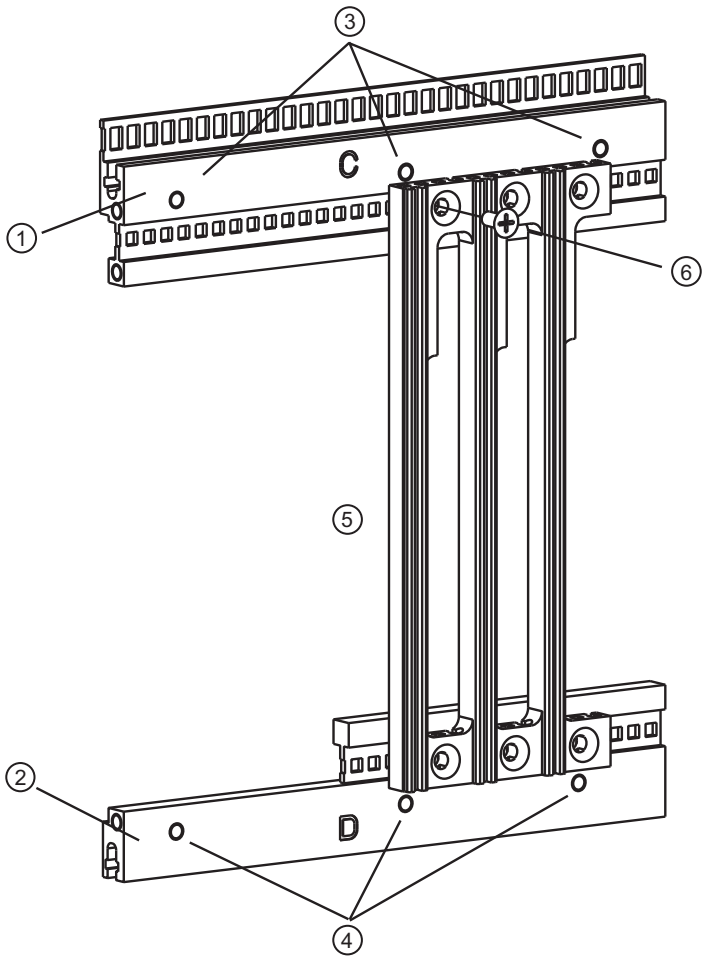

The appearance of the Card Guide Assembly after the removal of the Fan and Fan Bracket. This assembly does not need to be disassembled. 1. Upper card guide assembly extrusion. 2. Lower card guide assembly extrusion. 3. Upper threaded holes for mounting the Fan Bracket on the far side of the extrusion.	4. Lower threaded holes for mounting the Fan Bracket on the far side of the extrusion. 5. Three-slot card guide assembly. 6. Six (6) flat head Phillips screws holding the card guide slot assembly onto the extrusions.

Figure 18-11. Card Guide Assembly After Removing the Fan and Fan Bracket

3. Set the Card Guide Assembly aside.

Remove the Fan from the Fan Bracket

4. Remove the Digital PCB Fan from the Digital Fan Bracket as shown below in Figure 18-12.

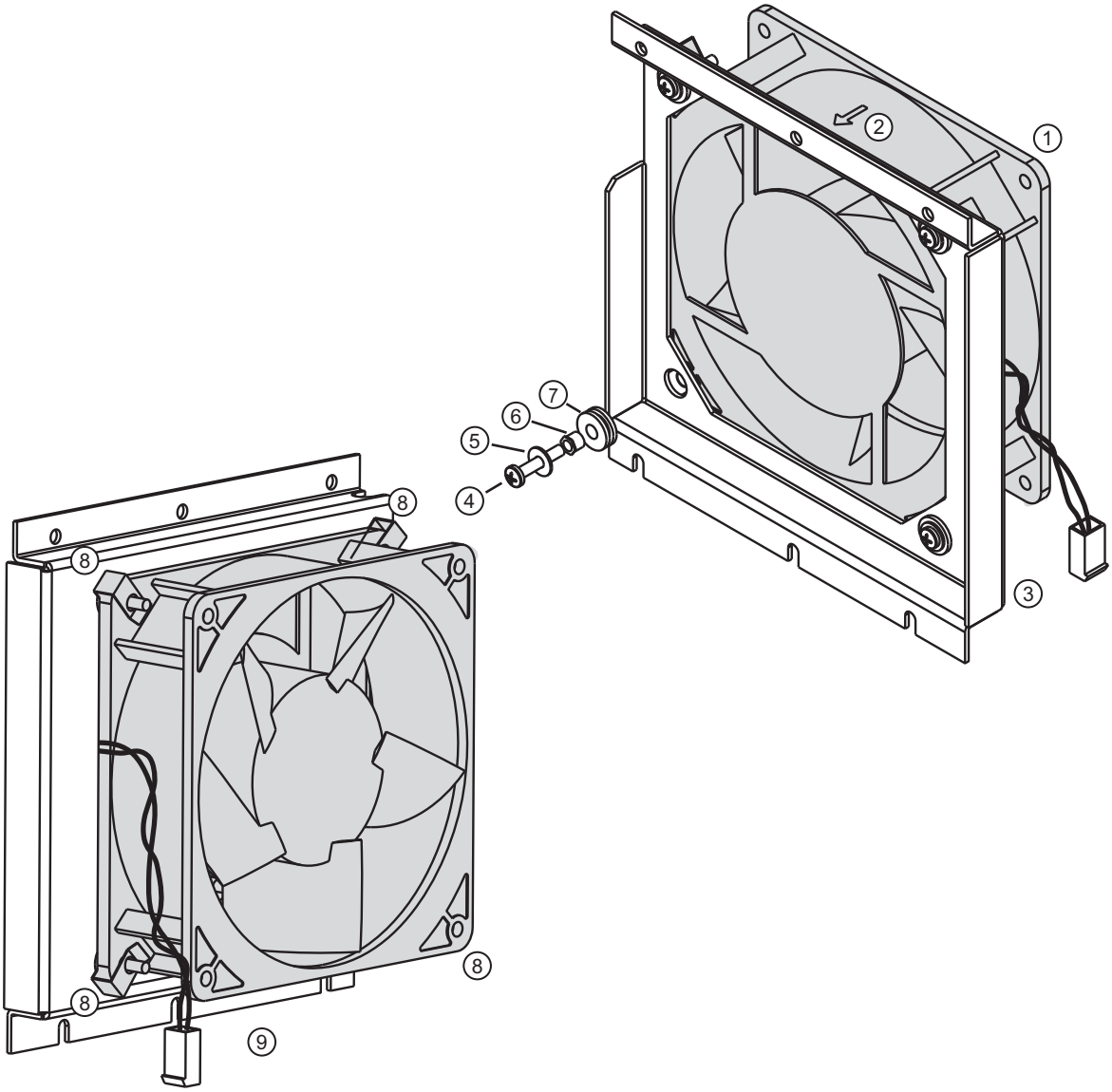

Figure 18-12. Remove or Install the Digital PCB Fan on the Fan Bracket (1 of 2)

Fan, Airflow, and Bracket	Fastening Hardware
1. Digital PCB Fan and Harness 2. Note that the fan airflow must be into the Digital PCB Bay towards the front of the instrument. 3. Digital Fan Bracket	The fan is held to its mounting bracket with the following hardware in four (4) places: 4. Pan head Phillips 6×32 × 0.750” mounting screws. 5. #6 flat washers. 6. Standoff #6 clearance × 0.187” High 7. Isolation Vibration Grommet 8. Threaded Spring Clip, 0.31” × 0.25” (on the fan). 9. Power connector – 2-wire twisted pair header connector – Connects to Motherboard 2 PCB Assembly P96 connector

Figure 18-12. Remove or Install the Digital PCB Fan on the Fan Bracket (2 of 2)

Fan to Fan Bracket Mounting Hardware

5. As shown in Figure 18-12 above, the fan mounting hardware consists of four (4) sets of the following:

- Pan head Phillips 6×32 × 0.750” mounting screws
- #6 flat washers
- #6 clearance × 0.187” standoffs
- Isolation vibration grommets
- Threaded Spring Clips, 0.31” × 0.25”

6. All mounting hardware must be removed from the to-be-replaced fan to use with the replacement fan.

7. Remove the four (4) pan head Phillips 6×32 × 0.750” mounting screws that hold the fan to the fan bracket. The fan bracket appears as shown below in Figure 18-13.

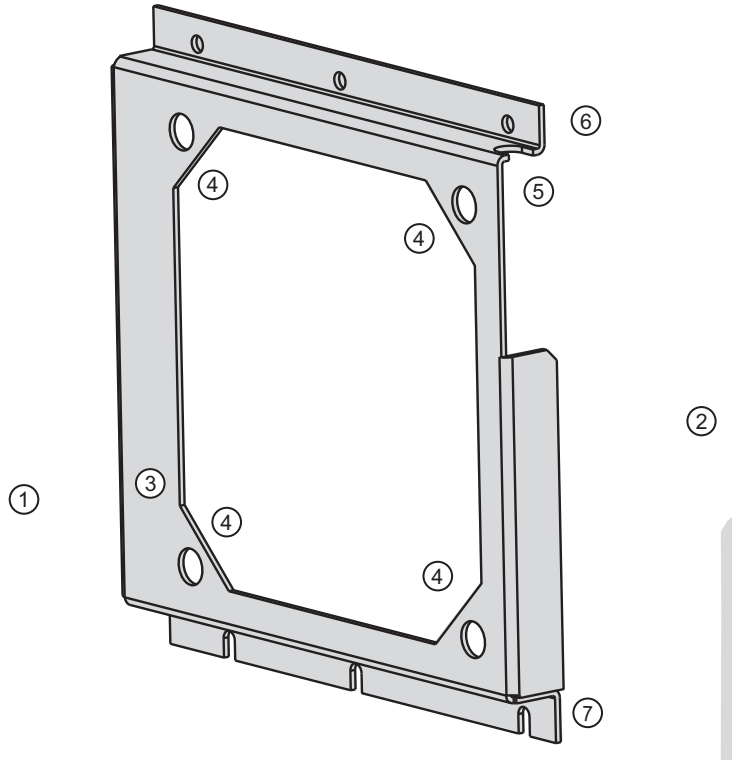

1. Instrument rear	4. Isolation vibration grommet mounting holes.
2. Instrument front and airflow in this direction, from rear panel towards the front panel.	5. Bracket notch is oriented towards left side of chassis.
3. Fan mounting surface on bracket.	6. Top card guides mount here.
	7. Bottom card guides mount here.

Figure 18-13. Remove or Install the Fan and Digital PCB Fan Bracket

Attach the Fan to the Fan Bracket

8. Note the fan airflow direction must be towards the front of the instrument.

9. Attach the four (4) threaded spring clips to the “airflow out” side of the fan.

10. Install the four (4) isolation vibration grommets into the Digital PCB Fan Bracket mounting holes.

11. The sequence for each mounting screw is shown above in Figure 18-12, “Remove or Install the Digital PCB Fan on the Fan Bracket” on page 18-19.

12. Working from the front side of the Fan Bracket, insert each screw through the washer, and then through the standoff (with the standoff flange facing the screw head), through the vibration isolation grommet, and finally thread into the spring clip mounted on the fan.
13. Tighten all screws.

Attach the Digital Fan Bracket Assembly to the Card Guide Assembly

14. Attach the Digital Fan Bracket Assembly to the Card Guide Assembly by inserting six pan head Phillips M4 × 10 mm screws from the Digital Fan Bracket Assembly into the threaded holes in the Card Guide Assembly.
15. When all screws are correctly threaded, tighten.
16. The Digital PCB Fan Assembly with the attached PCB Card Guide Assembly is ready to install in the instrument chassis.

18-4 Install the Digital Fan Bracket Card Guide Assembly

Use this procedure to install the Digital Fan Bracket Card Guide Assembly into the chassis after removal. This procedure is used after removing the assembly to replace the fan, or to access the Motherboard 1 PCB Assembly.

Procedure

Prerequisites

1. If the Digital PCB Fan was replaced, make sure all hardware has been transferred from the to-be-replaced fan to the new replacement unit.
2. Check that the fan airflow is from the rear panel towards the front panel.
3. Check that all fastening hardware is tightened.

Install the Digital PCB Fan Bracket and Card Guide Assembly

4. See Figure 18-9, “Remove or Install the DC Fan Bracket/Card Guide Assembly” on page 18-16 above.
5. Place the Fan Bracket and Card Guide Assembly in the chassis and fasten in place with eight (8) pan head Phillips M4 × 10 mm screws.
6. When all screws are correctly threaded, tighten.

Connect the Digital PCB Fan Power and Ground Cables

7. Connect the Fan power cable and header connector to the Motherboard 2 PCB Assembly P96 connector.

Connect the AC Module Ground Lugs

8. Connect the AC Module Ground ring lugs to the chassis center plate.
   - See Figure 18-7, “Remove or Install the Power Supply Module Assembly” on page 18-14 for general location.
   - See Figure 18-8, “Disconnect or Connect the Power Supply Module Ground Cables” on page 18-15 for installation detail.
9. Place the two ring-lug ground cables over the swagged-in threaded stud. Thread on two (2) M3 × 0.5 kep nuts and make sure the two ground lugs are dressed so that the ground symbol is readable.

Install the Power Supply Module

10. See the following reference figures in Chapter 17, “Power Supply Module”:
    - Figure 17-2, “Phase 1 Power Supply Module Assembly – ND70072 – 62088” on page 17-4.
    - Figure 17-3, “Phase 1 Power Supply Module Wiring Harness Connections” on page 17-6.
    - Figure 17-6, “Power Supply Module Assembly – AC Line Module Connections” on page 17-11.
    - Figure 17-7, “Location of Left Side Screw and Rear Panel Screws” on page 17-13.
11. Place the Power Supply Module and Bracket assembly in the Digital PCB Bay while routing the main and control power supply harnesses toward the front of the instrument through the chassis openings.
12. Install the four (4) pan head Phillips M2.5 × 10 mm screws holding the power supply module bracket in place. Tighten all four screws.
13. Once in position, connect the main power supply harness connector to the Motherboard 2 PCB Assembly P41 connector near the front of the PCB.
14. Connect the power supply control harness connector to the Motherboard 2 PCB Assembly P42 connector near the front of the PCB.

Install the Chassis Left Side Plate

15. See Figure 17-7, "Location of Left Side Screw and Rear Panel Screws" on page 17-13 for orientation.

16. Position the chassis left side plate loosely in position and then prepare to insert the 14 flat head screws to hold it in place.

17. Insert the seven (7) flat head M4 × 8 mm screws that hold the Left Side Plate to the instrument chassis.

18. Insert the three (3) flat head M4 × 10 mm screws into the Digital Fan Bracket and Card Guide Assembly.

19. Insert the four (4) flat head M4 × 10 mm screws into the Power Supply Module mounting bracket.

20. When all screws are inserted and correctly threaded, tighten.

Install the Rear Panel Assembly

21. See Chapter 16, "Rear Panel Components" above for the following reference figures:

- Figure 16-1, "Rear Panel Assembly – Outside – Panel Attached with Covers Off" on page 16-3
- Figure 16-2, "Rear Panel Assembly – Inside – A17 PCB Cable Connections" on page 16-5
- Figure 16-3, "Rear Panel Assembly – Outside – A17 PCB and Fan Mounting Hardware" on page 16-7
- Figure 16-4, "Rear Panel Assembly – Inside View – Cable Connections" on page 16-9
- Figure 16-5, "Remove or Install the Rear Panel Sub Plate" on page 16-11
- Figure 16-6, "Remove or Install the Rear Panel Assembly" on page 16-13

22. Position the Rear Panel Chassis Plate in position, making sure all cables are correctly routed.

23. Using an 8 mm hex driver bit, insert and thread the 12 cap socket Allen-head M4 × 10 mm screws into the Rear Panel Plate. There are three (3) rows of four (4) screws each.

24. When all are correctly threaded, tighten in two passes, working from the center of the panel out to the edges.

Install the Rear Panel Sub Plate

25. Carefully position the silk-screened Rear Panel Sub Plate into position and thread in the 14 pan head Phillips M3 × 6 mm screws.

26. When all are correctly threaded, carefully tighten in two passes, working from the center of the panel out to the edges.

Install the RF Deck

27. Install the RF Deck.

- See Section 14-4, "Install the RF Deck" on page 14-12.

28. If removed, install the RF Deck Rear Panel Loops.

Install the Analog Module Assemblies

29. Install the Analog Module Assemblies.

- See Section 9-15, "Install the Right Side Analog Modules" on page 9-31.

Install the Digital PCB Assemblies

30. Install the Digital PCB Assemblies.

- See Section 9-12, "Location of Right Side Analog Module Assemblies" on page 9-26.

Install the Front Panel

31. Install the Front Panel Assembly.

- Section 10-6, "Install the Phase 1 Front Panel Assembly" on page 10-19.
- If removed and equipped, install the Front Panel Loops.

Install Covers

32. Install the Inner Top Cover.

- Section 7-7 “Common - Install Inner Cover” on page 7-15

33. Install the Outer Cover.

- Section 7-8 “Common - Install Outer Cover” on page 7-16

Chapter 19 — MB1 and MB2 PCB Replacement Procedures

19-1 Introduction

This chapter describes the procedures to remove the Motherboard 1 PCB and the Motherboard 2 PCB Assemblies.

The Motherboard 2 PCB Assembly must be first removed to replace the Motherboard 1 PCB Assembly and is mounted horizontally below the PCB bays and above the RF Deck Assembly. The PCB provides the backplane connectors for the Digital Section PCBs and the Motherboard 1 PCB Assembly. Each instrument is equipped with one (1) MB2 PCB.

The Motherboard 1 PCB Assembly is vertically mounted in the Digital PCB Bay, where its backplane connectors protrude through openings in the chassis center plate and provides backplane connectors for the three (3) Analog Module Assemblies. Each instrument is equipped with one (1) MB1 PCB.

Below, Figure 19-1 on page 19-2 shows the general orientation of the MB1 and the MB2 PCBs.

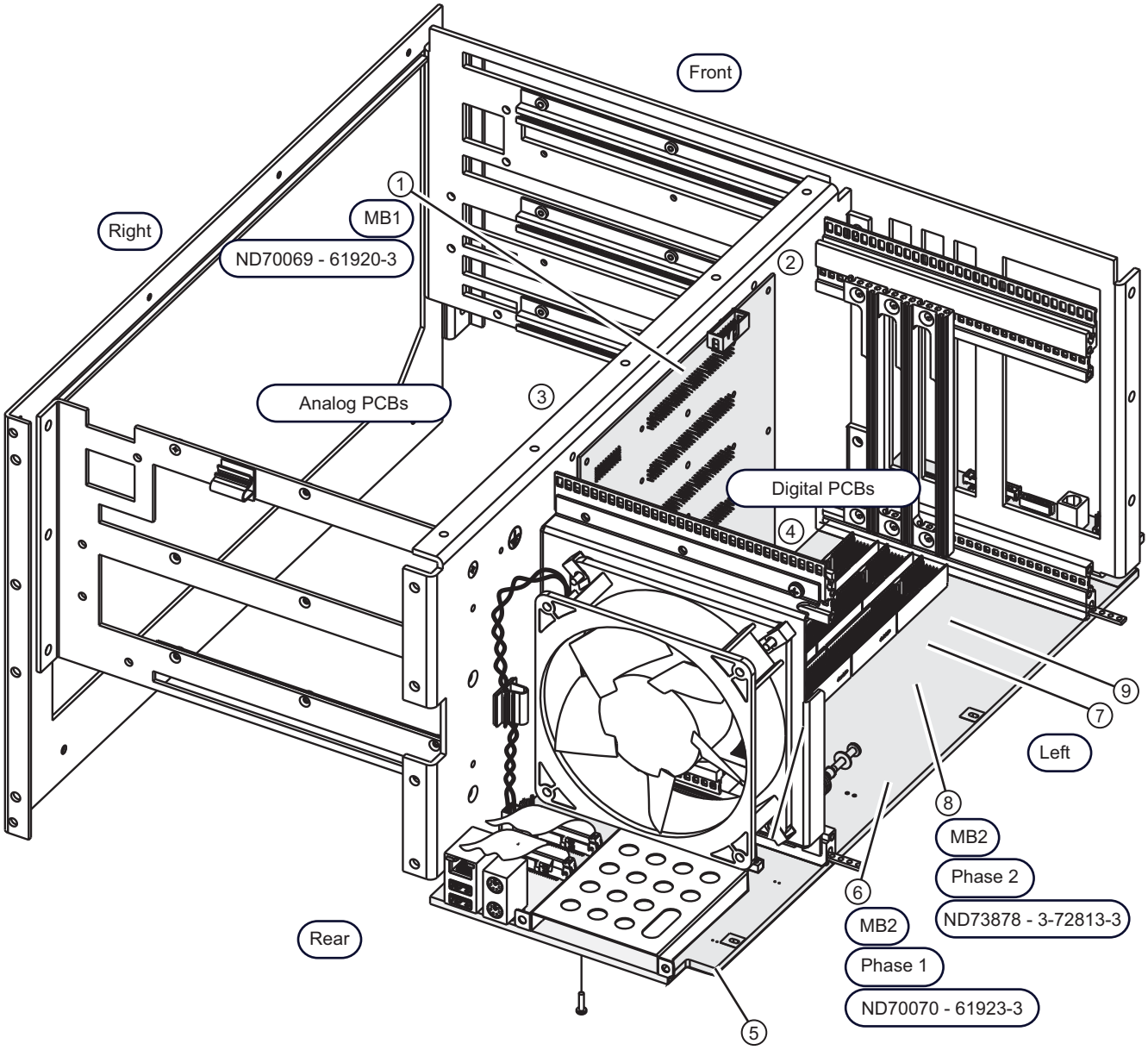

Figure 19-1. Motherboard 1 (MB1) PCB Assembly – Phase 1 / Phase 2 MB2 PCBs (1 of 2)

Orientation

Viewing the instrument chassis from the Rear Panel.

Removals

The Left Side Chassis Plate, the Rear Panel Plate, the Front Panel Assembly, the RF Deck, the Digital PCBs, and the Analog PCBs have been removed for clarity.

MB1 PCB

1. MB1 – Motherboard 1 PCB Assembly – ND70069 – 61920-3
2. Mounted vertically and fastened in Digital PCB Bay to the Chassis Center Plate.
3. The MB1 PCB backplane connectors protrude through plate openings into the Analog PCB Bay for (from top to bottom) the A11 IF Band Module, A13 Source Module, and A15 Low Band Receiver Module.
4. The MB1 PCB connects via a backplane connector into the MB2 PCB. The MB1 PCB can only be removed after the MB2 PCB has been removed.

Phase 1 MB2 PCB

5. Mounted horizontally below the Digital PCB Bay and just above the RF Deck chassis.
6. MB2 – Phase 1 Motherboard 2 PCB Assembly – ND70070 – 61923-3
7. The Phase 1 MB2 backplane connectors viewed from rear, from left to right are:
   - MB1 PCB
   - A10 DSP Module PCB
   - A6 cPCI-PMC PCB with A7 Graphics and A8 GPIB PCBs
   - A3 Single Board Computer PCB with A4 USB PCB

Phase 2 MB2 PCB

8. MB2 – Phase 2 Motherboard 2 PCB – ND73878 – 3-72813-3
9. The Phase 2 MB2 backplane connectors viewed from rear, from left to right are:
   - MB1 PCB
   - A10 DSP Module PCB
   - CB PCB with SBC, SODIMM on SBC, GPIB, USB, and GPU PCBs

Figure 19-1. Motherboard 1 (MB1) PCB Assembly – Phase 1 / Phase 2 MB2 PCBs (2 of 2)

19-2 Phase 1 – MB2 PCB Assembly – ND70070 – 61923-3

The Phase 1 MB2 is only compatible with the Phase 1 digital section PCBs and power supply module listed below.

- A3 Single Board Computer PCB Assembly – ND70061 – 3-2000-1525/3-59632
- A6 cPCI to PMC Adapter Card PCB Assembly – ND70063 – 3-2000-1485
- A7 Graphic Adapter Card PCB – ND70065 – Mounted on the A6 PCB
- Phase 1 Power Supply Module and Harness – ND70072 – 62088 – with 3-72058 Cable Harness

Note	The following PCBs are compatible with Phase 1 and Phase 2 VNAs: • A3 USB Controller PCB Assembly – ND70062 – 65412-4 • A8 GPIB Module PCB Assembly – ND70065 – 65413-3 • A10 Digital Signal Processing Module PCB Assembly – ND70066 – 61933-3

In Figure 19-2 below, the MB2 connector locations are shown. In Figure 19-3 on page 19-7, a detailed view of the MB2 front connectors is shown.

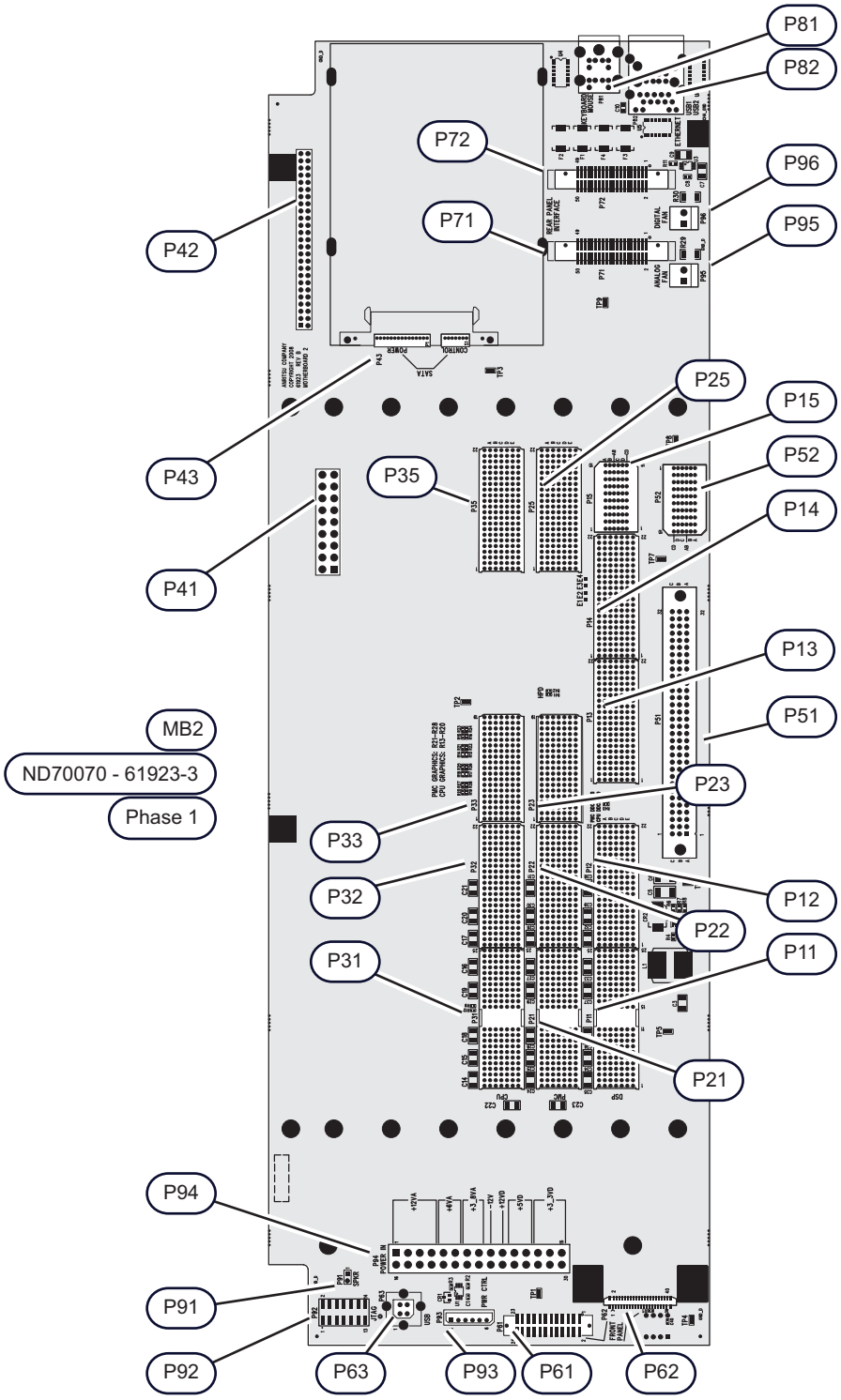

Figure 19-2. Phase 1 Motherboard 2 PCB Assembly – ND70070 – 61923-3 – Connectors (1 of 2)

Power Supply Connectors	**A3 Single Board Computer PCB Edge Connectors**
P62 – +3.3 VDC Sense Cable	P31
P93 – Power Control Cable	P32
P94 – Main Cable Harness from Power Supply	P33
Front Panel Connectors	P35
P61 – Power/Signal Ribbon Cable	**A6 Adapter Card PCB Edge Connectors**
P63 – USB Cable	P21
MB2 Front Connectors	P22
P54 – Debug Power – Not used	P23
P91 – Speaker – Not used	P25
MB2 Rear Connectors	**A10 Digital Signal Processing PCB Edge Connectors**
P43 – Solid State Drive/SATA Hard Disk Drive Control and Signal Connector	P11
P71 – Rear Panel Interface Connector	P12
P72 – Rear Panel Interface Connector	P13
P95 – Analog Section Fan Power	P14
P81 – PS/2 Keyboard and Mouse Connector Stack	P15
P82 – RJ45 Ethernet and USB Connector Stack	**Motherboard 1 PCB Edge Connectors**
P96 – Digital Section Rear Panel Fan Power	P51
	P52
	Reverse Side Connectors
	P41 – RF Power In
	P42 – RF Control In

Figure 19-2. Phase 1 Motherboard 2 PCB Assembly – ND70070 – 61923-3 – Connectors (2 of 2)

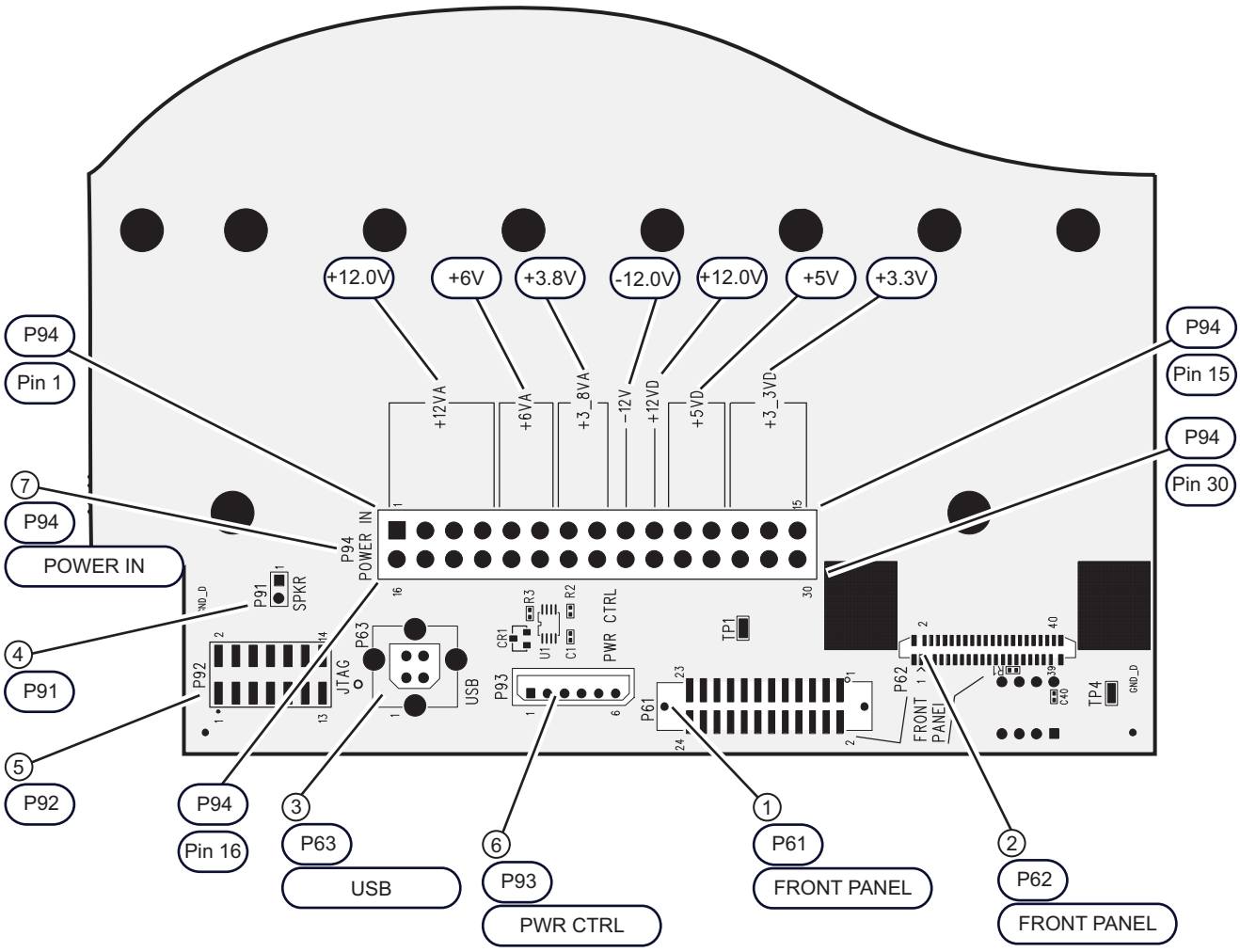

1. P61 – Ribbon Cable Connector to Front Panel	P94 – Connector Pin 1
2. P62 – Ribbon Cable Connector to Front Panel	P94 – Connector Pin 15
3. P63 – USB Type A Connector	P94 – Connector Pin 16
4. P91 – Speaker – Not used	P94 – Connector Pin 30
5. P92 – JTAG – Not used	
6. P93 – Power Control Connector to Power Supply	
7. P94 – Power In Connector to Power Supply	

Figure 19-3. Phase 1 Motherboard 2 PCB Assembly – ND70070 – 61923-3 – Front

19-3 Phase 2 – MB2 PCB Assembly – ND73878 – 3-72813-3

The Phase 2 MB2 is only compatible with the Phase 2 digital section PCBs and power supply module listed below.

- CB PCB – Carrier Board PCB Assembly – ND73874 – 73-72444-3
- SBC PCB – Single Board Computer PCB Assembly – ND73875 – 3-2000-1668 – Mounted on the CB PCB.
- SODIMM – Small-Outline Dual Inline Memory Module – No ND – 3-2000-1671 – Mounted on the SBC PCB, two (2) per instrument.
- GPU PCB – Graphics Processor Unit ATI E4690 MXM – ND73876 – 3-2000-1661 – Mounted on the back of the CB PCB.
- Phase 2 Power Supply Module and Harness – ND73933 – 71995 – with 3-71996 Cable Harness and 3-67873 3.3 VDC Power Sense Cable

Note

The following PCBs are compatible with Phase 1 and Phase 2 VNAs:

- A3 USB Controller PCB Assembly – ND70062 – 65412-4
- A8 GPIB Module PCB Assembly – ND70065 – 65413-3
- A10 Digital Signal Processing Module PCB Assembly – ND70066 – 61933-3

In Figure 19-4 below, the MB2 connector locations are shown. In Figure 19-5 on page 19-11, a detailed view of the MB2 front connectors is shown.

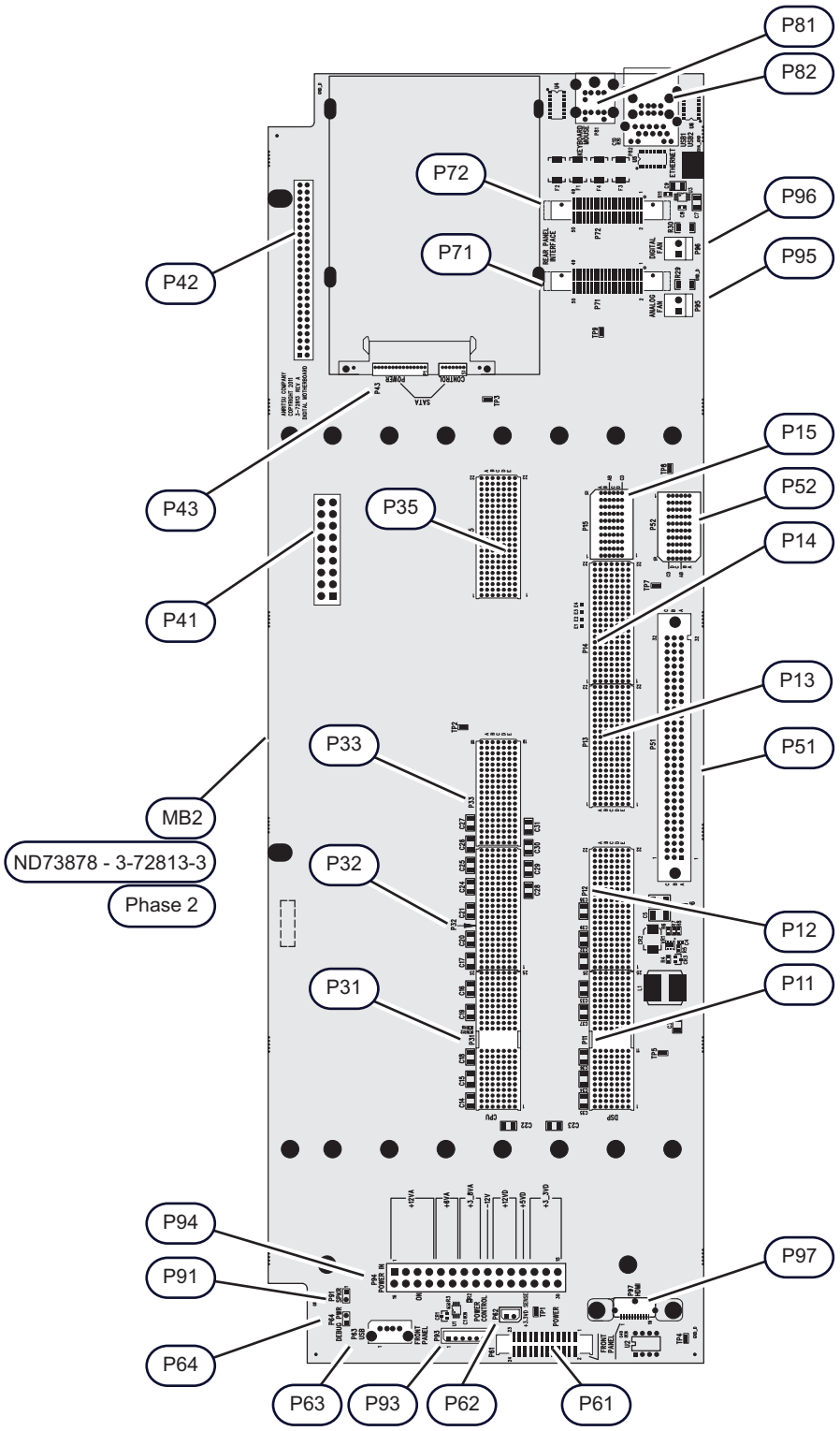

Figure 19-4. Phase 2 Motherboard 2 PCB Assembly – ND73878 – 3-72813-3 – Connectors (1 of 2)

Power Supply Connectors	**Carrier Board PCB Edge Connectors**
P94 – Main Cable Harness from Power Supply	P31
P93 – Power Control Cable	P32
P62 – +3.3 VDC Sense Cable	P33
Front Panel Connectors	P35
P61 – Power/Signal Ribbon Cable	**A10 Digital Signal Processing PCB Edge Connectors**
P63 – USB Cable	P11
P97 – HDMI Cable	P12
MB2 Front Connectors	P13
P54 – Debug Power – Not used	P14
P91 – Speaker – Not used	P15
MB2 Rear Connectors	**Motherboard 1 PCB Edge Connectors**
P43 – Solid State Drive/SATA Hard Disk Drive Control and Signal Connector	P51
	P52
P71 – Rear Panel Interface Connector	**Reverse Side Connectors**
P72 – Rear Panel Interface Connector	P41 – RF Power In
P95 – Analog Section Fan Power	P42 – RF Control In
P81 – PS/2 Keyboard and Mouse Connector Stack	
P82 – RJ45 Ethernet and USB Connector Stack	
P96 – Digital Section Rear Panel Fan Power	

Figure 19-4. Phase 2 Motherboard 2 PCB Assembly – ND73878 – 3-72813-3 – Connectors (2 of 2)

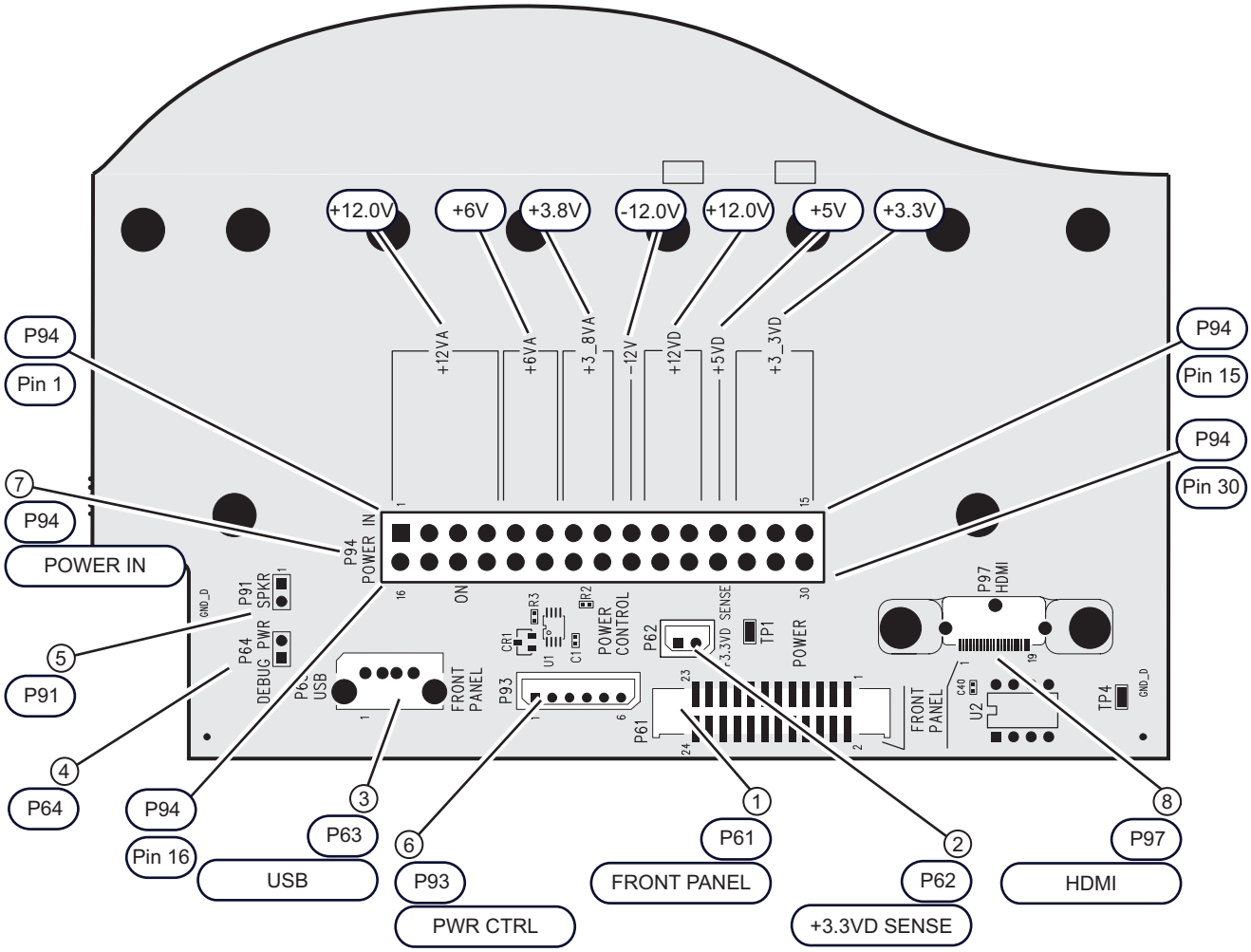

1. P61 – Ribbon Cable Connector to Front Panel	P94 – Connector Pin 1
2. P62 – +3.3 VDC Sense Connector to Power Supply Module	P94 – Connector Pin 15
3. P63 – USB Type A Connector to Front Panel	P94 – Connector Pin 16
4. P64 – Debug Power – Not used	P94 – Connector Pin 30
5. P91 – Speaker – Not used	
6. P93 – Power Control Connector to Power Supply	
7. P94 – Power In Connector to Power Supply	
8. P97 – HDMI Connector to Front Panel	

Figure 19-5. Phase 2 Motherboard 2 PCB Assembly – ND73878 – 3-72813-3 – Front

19-4 Remove the Motherboard 2 PCB Assembly

Use this removal procedure for both Phase 1 and Phase 2 MB2 PCBs. Both PCBs are mechanically identical.

Common Procedures

1. Prepare work area, work surface, and observe safety issues.
   - See Section 7-4 “Common - Prepare Work Area and Safety” on page 7-9.
2. Remove Outer Cover.
   - See Section 7-5 “Common - Remove Outer Cover” on page 7-10.
3. Position the instrument so that it is right-side up, RF deck down.
4. Remove Inner Top Cover.
   - See Section 7-6 “Common - Remove Inner Cover” on page 7-13.

Remove Digital PCB Assemblies

5. Remove digital section top side PCBs.
   - See Section 9-3 “Remove Digital PCB Assemblies” on page 9-7.

Remove Analog Module Assemblies

6. Remove the right side analog section analog module assemblies modules.
   - See Section 9-13 “Remove Right Side Analog Modules” on page 9-27

Remove Front Panel

7. Position the instrument right side up.
8. Install blocking near the front edge of the chassis.
9. If equipped, remove the front panel loops from RF Deck Front Panel.
10. Remove the Front Panel Assembly.
    - To remove it, see:
      - Section 10-3 “Remove the Phase 1 Front Panel Assembly” on page 10-3
      - Section 10-4 “Remove the Phase 2 Front Panel Assembly” on page 10-11

RF Deck Top Side Coaxial Cable Connections

11. Loosen and then remove the semi-rigid coaxial cable from the A111 LO Distribution Module Assembly and its right side J1 connector. The other end of the cable should already be disconnected from the previously removed middle A13 Source Module and its J9 connector.
12. Remove the four MCX cables from the A100-A103 Sampler Modules and their rear facing J3 connectors. These cables route to the previously removed top A11 IF Band Module. The cables can stay fastened to the chassis with cable ties.

Remove RF Deck

13. Position the chassis upside down.
14. Disconnect the cable harness connected to the P42 RF Control connector located near the front of the MB2 PCB.
15. Disconnect the cable harness connected to the P41 RF Power connector located near the front of the MB2 PCB.
16. Remove the RF Deck.
    - See Section 14-3 “Remove the RF Deck” on page 14-4.

Rear Panel Sub Plate

17. Position the instrument right side up.

18. Be careful not to scratch the silk-screened Rear Sub Plate when working on it.

19. Remove the Rear Sub Plate by removing 14 pan head Phillips M3 × 6 mm screws.

20. Carefully set the sub-plate aside.

Remove Rear Panel Cables

21. Cut the cable ties holding two ribbon cables from the A17 Rear Panel PCB Assembly. The cables route to connectors on the MB2 PCB.

22. Remove the four (4) outer screws holding the AC Power Module Assembly to the Rear Panel. The AC Module is permanently connected via a multi-wire harness to the Power Supply Module. Leave it in place but out of the way for the steps below.

23. The three (3) Analog Module Assemblies should have been removed in a step above. Disconnect any remaining MCX to BNC coaxial cables from their destination. The cables are permanently attached to the Rear Panel BNC connectors.

Remove A27 Rear Panel PCB Cables

24. Remove the ribbon cable from the A17 Rear Panel PCB (A17 PCB) Assembly at the top P1 connector.

25. Remove the ribbon cable from the A17 PCB at the bottom P2 connector.

Remove Rear Panel

26. If not already completed, remove the Rear Panel Loops.

27. Remove the Rear Panel.

- See Section 16-3 “Remove the Rear Panel Assembly” on page 16-2.

28. Pull the Rear Panel straight out slowly, making sure that all cables have been disconnected.

29. Once clear of the chassis, set the Rear Panel aside.

Remove Motherboard 2 PCB Cables

30. Use the steps below to remove any remaining cables connected to the MB2 PCB.

31. Remove the USB cable from the MB2 PCB P62 connector.

32. Remove the Power Supply Power cable from the MB2 PCB P94 connector.

33. Remove the Power Supply Control cable from the MB2 PCB P93 connector.

34. Remove the two ribbon cables formerly attached to the A17 PCB from the MB2 PCB P71 and P72 connectors.

35. Remove the two fan power cables from the MB2 PCB P95 and P96 connectors.

Remove Motherboard 2 PCB Assembly

36. Position the chassis upside down.

37. Remove the 19 pan head Phillips M2.5 × 10 mm screws from bottom side of MB2 PCB.

Disconnect the Motherboard 1 PCB Backplane Connector

38. At this point, the MB2 PCB Assembly is still attached to the MB1 PCB through the MB2 backplane connector.

39. Gently lift the MB2 PCB straight up so that the backplane socket on the MB1 PCB disconnects from the backplane pins on the MB2 PCB.

40. Remove the MB2 PCB.

Next Steps

41. At this point, the next step depends on the removal goal. Use one of the two procedure groups below depending on that goal.
42. To replace the MB2 PCB, use the following procedures in sequence:
    - Section 19-5, “Prepare the Replacement Motherboard 2 PCB Assembly” on page 19-14.
    - Section 19-6, “Install the Motherboard 2 PCB Assembly” on page 19-14.
43. To replace the MB1 PCB, use the following procedures in sequence:
    - Section 19-8, “Remove the MB1 PCB Assembly – ND70069 – 61920-3” on page 19-18.
    - Section 19-9, “Prepare the Replacement Motherboard 1 PCB Assembly” on page 19-20.
    - Section 19-10, “Install the Motherboard 1 PCB Assembly” on page 19-20
    - Section 19-6, “Install the Motherboard 2 PCB Assembly” on page 19-14.

19-5 Prepare the Replacement Motherboard 2 PCB Assembly

There are no replaceable parts located on the MB2 PCB and its replacement is ready to go direct from the factory.

If any of the disconnected cables were left on the to-be-replaced MB2 PCB, transfer them to the replacement PCB.

19-6 Install the Motherboard 2 PCB Assembly

Procedure

Prerequisite

1. The MB1 PCB must be installed and fastened in place to perform this procedure.

Install Motherboard 2 PCB Assembly

2. If installing a replacement MB2, make sure that all cable harnesses on the removed PCB are transferred to the replacement unit.
3. Carefully position the MB2 PCB Assembly in place.
4. Make sure the MB2 PCB P51 backplane connector socket correctly engages with the MB1 PCB backplane pins.
5. Gently press the MB2 PCB backplane connector into place so that the pins on the MB1 PCB fully seat in the MB2 PCB connector.
6. Check from the side to make sure the MB1 PCB pins are fully seated into the MB2 PCB connector.

Motherboard 2 PCB Assembly Hardware

7. Loosely insert the 19 pan head Phillips M2.5 × 10 mm mounting screws holding the MB2 PCB in place
8. When correctly positioned and threaded, tighten all screws using two passes, each time working from the center out.
9. Position the instrument chassis so it is right side up.
10. Connect the Motherboard 2 PCB Assembly cables at their connectors.

Install the Rear Panel

11. Install the Rear Panel.
    - See Section 16-10 “Installing the Rear Panel Assembly” on page 16-22.

Install RF Deck

12. Position the instrument upside down.

13. Install the RF Deck.

- See Section 14-4 “Install the RF Deck” on page 14-12.

Install Analog Module Assemblies

14. Position the instrument right side up.

15. Install the three (3) analog module assemblies and connect the MCX and semi-rigid coaxial cables.

- See Section 9-15 “Install the Right Side Analog Modules” on page 9-31.

Install Digital PCB Assemblies

16. Install the three digital PCB assemblies and connect the Rear Panel and other cables.

- See Section 9-12 “Location of Right Side Analog Module Assemblies” on page 9-26.

Install Front Panel

17. Position a block under the front of the instrument chassis.

18. Install the Front Panel Assembly.

- Section 10-6 “Install the Phase 1 Front Panel Assembly” on page 10-19

Install Covers

19. Install the Inner Top Cover.

- See Section 7-7 “Common - Install Inner Cover” on page 7-15.

20. Install the Outer Cover.

- See Section 7-8 “Common - Install Outer Cover” on page 7-16.

Check Connections

21. Make sure all cables and harnesses are correctly connected and fully seated in their connectors.

22. Make sure all RF semi-rigid and MCX coaxial cables are correctly aligned, threaded, and torqued.

19-7 Motherboard 1 PCB Assembly – ND70069 – 61920-3

Part and Applicability

- MB1 – Motherboard 1 PCB Assembly – ND70069 – 61920-3
- Applicable to all MS4640A models with any combination of options.
- Each instrument is equipped with one (1) MB1 PCB.
- Figure 19-6 below shows the connector locations for the MB1 PCB.

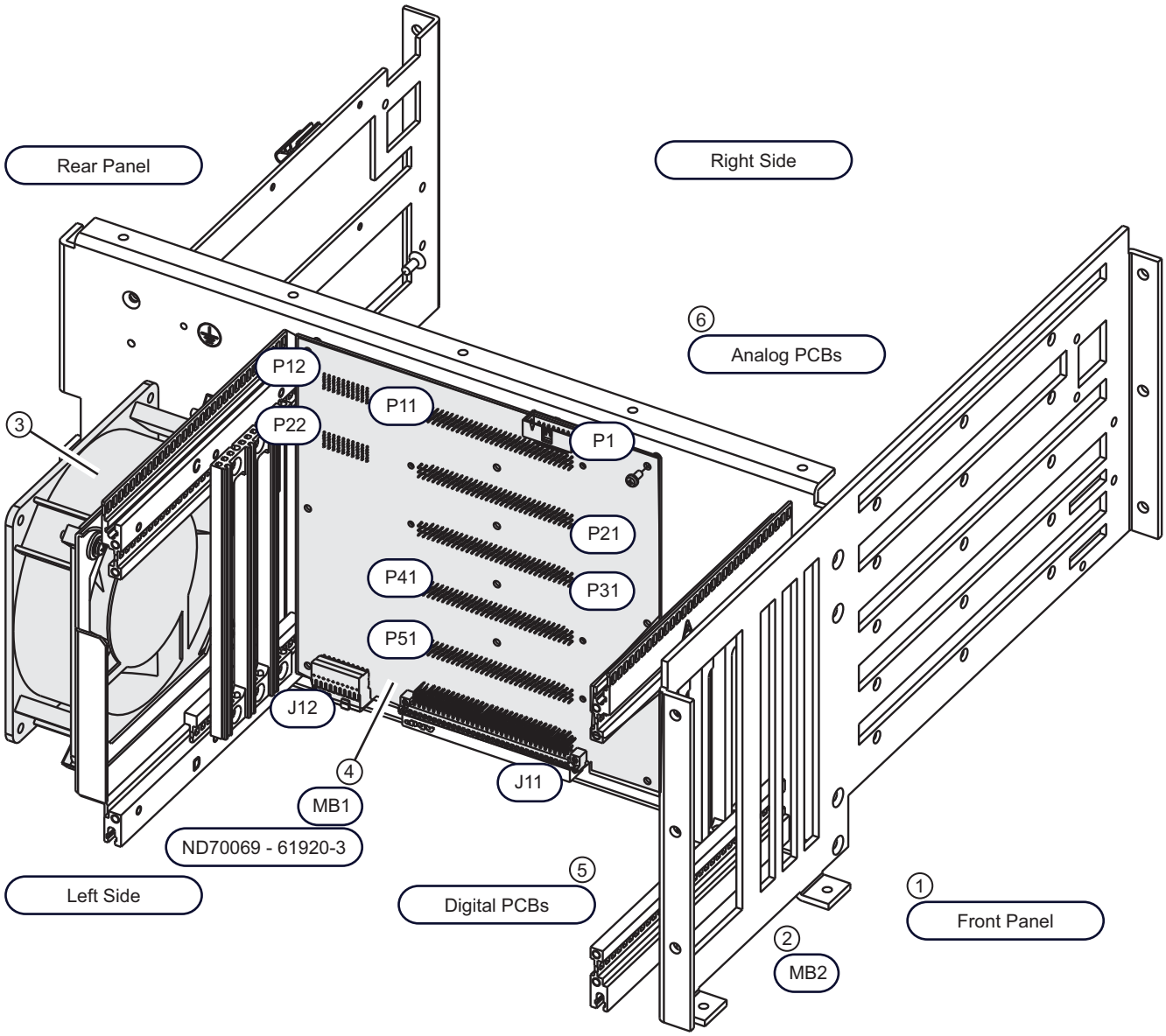

Figure 19-6. Motherboard 1 PCB Assembly – ND70069 – 61920-3 – Replacement (1 of 2)

1. Front Panel removed here.	7. MB1 J11 – Connects to MB2 PCB
2. Motherboard 2 PCB removed here.	8. MB1 J12 – Connects to MB2 PCB
3. Digital Section Fan Assembly and Bracket	9. MB1 P1
4. MB1 – Motherboard 1 PCB Assembly – ND70069 – 61920-3	10. MB1 P11 and P12 – Edge connectors for the A11 IF Band Module PCB Assembly.
5. Digital PCB Bay with PCBs and Power Supply Module removed here.	11. MB1 P21 and P22 – Not used.
6. Analog PBC Bay with PCBs removed here.	12. MB1 P31 – Edge connectors for the A13 Source Module PCB Assembly.
	13. MB1 P41 – Not used.
	14. MB1 P51 – Edge connectors for the A15 Low Band Receiver Module PCB Assembly.

Figure 19-6. Motherboard 1 PCB Assembly – ND70069 – 61920-3 – Replacement (2 of 2)

19-8 Remove the MB1 PCB Assembly – ND70069 – 61920-3

Procedure

Use this procedure to remove the Motherboard 1 PCB assembly. In general, the only reason to remove the Motherboard 1 PCB Assembly is to replace it.

Common Procedures

1. Prepare work area, work surface, and observe safety issues.
   - See Section 7-4 “Common - Prepare Work Area and Safety” on page 7-9
2. Remove Outer Cover.
   - See Section 7-5 “Common - Remove Outer Cover” on page 7-10.
3. Position the instrument so that it is right-side up, RF deck down.
4. Remove Inner Top Cover.
   - See Section 7-6 “Common - Remove Inner Cover” on page 7-13.

Remove Digital PCB Assemblies

5. Remove digital section top side PCBs.
   - See Section 9-3 “Remove Digital PCB Assemblies” on page 9-7.

Remove Analog Module Assemblies

6. Remove analog section right side module assemblies.
   - See Section 9-13 “Remove Right Side Analog Modules” on page 9-27.

Remove Front Panel

7. Move block near front of instrument.
8. Remove the Front Panel Assembly.
   - To remove it, see:
     - Section 10-3 “Remove the Phase 1 Front Panel Assembly” on page 10-3
     - Section 10-4 “Remove the Phase 2 Front Panel Assembly” on page 10-11

Remove the RF Deck

9. Make sure all the RF Deck to other assembly semi-rigid and MCX coaxial cables have been removed.
10. Position the chassis upside down.
11. Remove any remaining cables between the chassis components and the RF Deck.
12. Remove the RF Deck.
    - See Section 14-3 “Remove the RF Deck” on page 14-4.

Remove Motherboard 2 PCB Assembly

13. Remove all connecting cables to the Motherboard 2 PCB Assembly.
14. Position the chassis upside down.
15. Remove the Motherboard 2 PCB assembly.
    - See Section 19-4 “Remove the Motherboard 2 PCB Assembly” on page 19-12.
    - During the removal process, the Motherboard 2 PCB backplane connector disengages from the Motherboard 1 PCB Assembly edge contacts.

Remove Digital PCB Fan, Bracket, and Card Guide Assembly

16. Remove the Digital PCB Fan Bracket and Card Guide Assembly.
    - See Section 18-2 “Remove the Digital PCB Fan Bracket/Card Guide Assembly” on page 18-2.
17. During the fan procedure, the left chassis side plate is removed.

18. Remove the Digital PCB Fan Bracket and Card Guide Assembly.

- See Section 18-2, “Remove the Digital PCB Fan Bracket/Card Guide Assembly” on page 18-2.
- This provides access to the Motherboard 1 PCB Assembly mounting screws.

19. Once removed, set the Digital PCB Fan, Bracket, and Card Guide Assembly aside.

Remove Motherboard 1 PCB Assembly

20. Working from the Digital PCB Bay, remove the 10 pan head Phillips M3 × 6 mm mounting screws holding the Motherboard 1 PCB Assembly in place. The swagged standoffs stay on the chassis center plate.

21. Remove the Motherboard 1 PCB Assembly by pulling it into the Digital PCB bay and then up and out.

19-9 Prepare the Replacement Motherboard 1 PCB Assembly

There are no replaceable parts and no cable harnesses on the Motherboard 1 PCB Assembly.

19-10 Install the Motherboard 1 PCB Assembly

Use this procedure to install a replacement Motherboard 1 PCB Assembly.

Part and Applicability

- Motherboard 1 PCB Assembly – ND70069 – 61920-3
- Applicable to all MS4640A models with any combination of options.

Procedure

Prerequisite

1. The Digital PCB Fan Bracket and Card Guide Assembly has been removed.
2. The Motherboard 2 PCB Assembly has been removed.

Install the Motherboard 1 PCB Assembly

1. Position the Motherboard 1 PCB Assembly in the Digital PCB Bay section of the chassis, with the Motherboard 1 PCB Assembly backplane connectors protruding through the chassis center plate openings into the Analog PCB Bay.
2. Loosely insert 10 pan head Phillips M3 × 6 mm mounting screws.
3. When the PCB is correctly positioned, and all screws are correctly inserted and threaded, tighten.

Install the Digital PCB Fan Bracket and Card Guide Assembly

4. Position the Card Guide/Digital Fan Assembly in the Digital PCB Bay and loosely insert the eight (8) flat head Phillips M4 x 10 mm screws from the right side Analog PCB Bay.
   - See Section 18-4, “Install the Digital Fan Bracket Card Guide Assembly” on page 18-23.
5. When the assembly is correctly positioned and all screws inserted and threaded, tighten.

Motherboard 2 PCB Assembly

6. Position the instrument upside down.
7. Install the Motherboard 2 PCB Assembly.
8. Carefully position the Motherboard 2 PCB Assembly and engage the backplane socket on the Motherboard 2 PCB Assembly into the Motherboard 1 PCB Assembly backplane pins.
9. When fully engaged, press the Motherboard 2 PCB Assembly into place.
10. Loosely insert the 19 pan head Phillips M2.5 × 10 mm mounting screws holding the PCB to the chassis.
11. When correctly positioned and threaded, tighten all screws.
12. Position the instrument chassis so it is right side up.
13. Connect the Motherboard 2 PCB Assembly cables.
    - See Section 19-6 “Install the Motherboard 2 PCB Assembly” on page 19-14
14. Check that all cables are correctly connected and fully seated in their connectors.

RF Deck

15. Install the RF Deck and connect its cables.
    - See Section 14-4 “Install the RF Deck” on page 14-12
    - Check that all cables are correctly connected and that all connectors are torqued.

Analog Module Assemblies

16. Position the instrument right side up.

17. Install the analog section module assemblies and connect their cables.

- See Section 9-15 “Install the Right Side Analog Modules” on page 9-31.

Digital PCB Assemblies

18. Install the digital section PCBs and connect their cables.

- See Section 9-12 “Location of Right Side Analog Module Assemblies” on page 9-26.

Front Panel

19. Add blocking under the front of the instrument.

20. Install the Front Panel Assembly

- See Section 10-6 “Install the Phase 1 Front Panel Assembly” on page 10-19

Covers

21. Install the Inner Top Cover.

- See Section 7-7 “Common - Install Inner Cover” on page 7-15.

22. Install the Outer Cover.

- See Section 7-8 “Common - Install Outer Cover” on page 7-16.

Appendix A — Front and Rear Panel Reference

A-1 Overview

The appendix provides an overview of the MS4640A Series VNA hardware user interface including front panel hard keys, front panel connectors, and rear panel connectors along with photographs and diagrams of the front and rear panels.

Each front panel key is described with its function, the menu or function it provides, and the main GUI path to the same menu.

Each port and connector is described with its connector type, its function, input/output limits, and, for the External I/O connector, its pin-out diagram.

See the **VectorStar MS4640A Series VNA Operation Manual – 10410-00266** for an overview of the user interface and detailed descriptions for each menu and dialog box.

A-2 Front Panel Touch Screen

The touch screen display shows the instrument measurement graphs. At the top is the MENU BAR with a series of drop-down menus to access various functions. Below the MENU BAR is the ICON TOOLBAR. The toolbar is user-configurable and can display up to 10 function icons. There are 32 icon-driven functions available.

On the right side of the display is the primary system navigation menus that starts with the multi-button MAIN menu. The menus are available by using either the touch screen, a connected mouse and keyboard, or in some cases, by pressing a front panel hard key.

Note	When using the touch screen, a recommended best practice is to use a positive hard press to make sure the required setting is input into the system. A light touch may not change the instrument setting as required.

A-3 Front Panel Hard Keys and Connectors

The MS4640A Series VNA front panel areas, keys, and port connectors are shown below in Figure A-1. The following figure, Figure A-2, “Typical MS4640A Series Front Panel Hard Keys and Connectors” provides identification of each key, port, and connector.

Typical VectorStar Front Panel. The Front Panel appearance varies depending in instrument model, phase, and equipped options.

Figure A-1. Typical VectorStar MS4640A Series VNA Front Panel

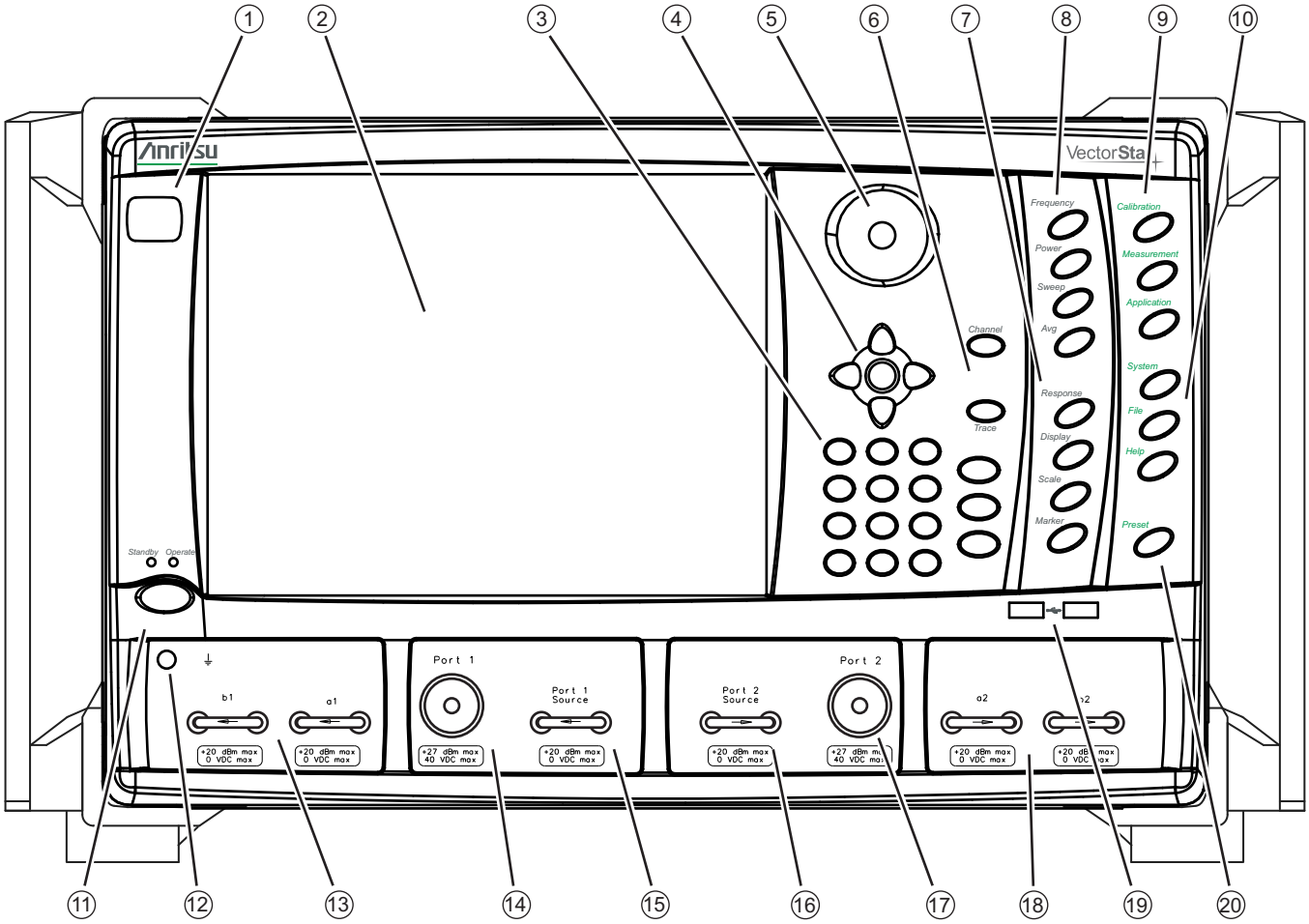

Figure A-2. Typical MS4640A Series Front Panel Hard Keys and Connectors (1 of 2)

Top Row

1. Instrument model number identification
2. Display Area: Touch screen with instrument test results and graphics. Menu bar and icon bar at top. The main graphical user interface menu display on the right side.
3. Data Entry: Data entry keypad with numbers from 0 (zero) to 9 (nine), Decimal Point, and +/– (Plus/Minus).
4. Navigation Keys: Up, Down, Left, Right arrow navigation keys and the center Select key.
5. Rotary Knob: Scrolls through values or changes settings. Pressing it is the same function as the Select key.
6. Channel Key: Select displays the Channel menu.
7. Analysis Key Group: Response, Display, Scale, and Marker Keys. Selecting each key displays the named menu.
8. Setup Key Group: Frequency, Power, Sweep, and Avg Keys. Selecting each key displays the named menu.
9. Measurement Key Group: Calibration, Measurement, and Application Keys. Selecting each key displays the named menu.
10. System Key Group: System, File, and Help keys. Selecting each key displays the named menu or the help start page.

Bottom Row

11. Standby/Operate Key: Pressing and holding the key for more than one (1) second toggles the VNA between standby and operate modes.
    - When in standby mode, the orange Standby LED above the key is illuminated.
    - When in operate mode, the green Operate LED above the key is illuminated.
12. Ground: Chassis Ground Port Banana connector
13. Direct Access Loops: b1 Front Panel Direct Access Loop (left) and a1 Front Panel Direct Access Loop (right).
14. Test Port 1: K (m) on MS4642A / MS4644A VNAs; V (m) on MS4645A / MS4647A VNAs
15. Port 1 Source Direct Access Loop: Port 1 Source Front Panel Direct Access Loop
16. Port 2 Source Direct Access Loop: Port 2 Source Front Panel Direct Access Loop
17. Test Port 2: K (m) on MS4642A / MS4644A VNAs; V (m) on MS4645A / MS4647A VNAs.
18. Direct Access Loops: a2 Front Panel Direct Access Loop (left) and b2 Front Panel Direct Access Loop (right)
19. USB Ports: Two USB 2.0 Type A Ports
20. Preset Key: The Preset key restores the instrument to one of three prior states:
    - User Defined: A previously saved user-defined state.
    - Default: The factory as-shipped state.
    - Default 0: The factory original setting. The user selects which preset mode is used.

Figure A-2. Typical MS4640A Series Front Panel Hard Keys and Connectors (2 of 2)

Front Panel Hard Key and Connector Description

The front panel hard keys are described in Table A-1 below. All front panel keys, controls, and ports are standard and equipped on all instrument models unless otherwise specified.

Table A-1. Front Panel Hard Keys and Functions (1 of 8)

Key Name	Primary Functions
	Power Key and Chassis Ground Connector
Standby/Operate Key	Pressing and holding the Standby/Operate key for at least one (1) second toggles the VNA between operate mode and standby mode. **Power Up** To power up the VNA into Standby mode, connect the instrument to AC power and then set the rear panel AC Power Rocker Switch (which is part of the upper right corner AC Power Input Module) to "|" or ON. The orange Standby LED on the front panel is illuminated and the Standby/Operate key is illuminated with an orange LED. See: "AC Power Input Module" on page A-16 below. **Standby to Operate Mode** With the VNA in standby mode, to change to operate mode, press and hold the Standby/Operate key for at least one (1) second. The green Operate LED is illuminated and the Standby/Operate key is illuminated with a green LED. **Operate to Standby Mode** With the VNA in operate mode, to change to standby mode, press and hold the Standby/Operate key for at least one (1) second. The orange Standby LED is illuminated and the Standby/Operate key is illuminated with an orange LED. **Power Off** With the VNA in standby mode, to remove AC power from the VNA and turn the VNA off, set the rear panel AC Power Rocker Switch to "O" or OFF. Do not remove AC Power from the VNA while it is in operate mode. Do not turn off the VNA while it is in operate mode.
Chassis Grounding Port	Provides an instrument chassis and signal grounding (earth) point. Banana (f).

Table A-1. Front Panel Hard Keys and Functions (2 of 8)

Key Name	Primary Functions
Calibration, Measurement, and Application Keys	
Calibration Key	Pressing **Calibration** displays the user interface CALIBRATION menu. Navigation Path: MAIN | Calibration | CALIBRATION menu
Measurement Key	Pressing **Measurement** displays the MEASUREMENT menu in the user interface display. Navigation Path: MAIN | Measurement | MEASUREMENT menu
Application Key	Pressing **Application** displays the APPLICATION menu in the user interface display. Navigation Path: MAIN | Application | APPLICATION menu
System, File, Help, and Preset Keys	
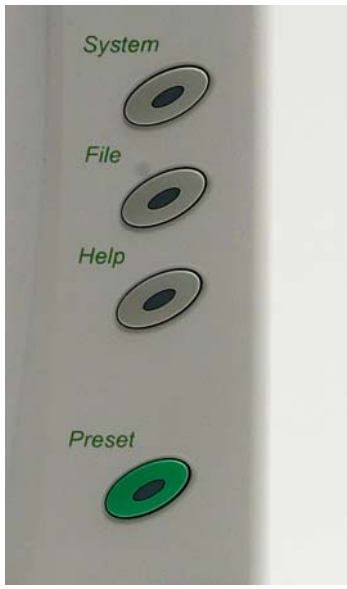	
System Key	Pressing **System** displays the System menu in the user interface display. Navigation Path: MAIN | System | SYSTEM menu
File Key	Pressing **File** displays the File menu in the user interface display. Navigation Path: MAIN | File | FILE menu
Help Key	Pressing **Help** displays the Help menu in the user interface display. Navigation Path: MENU BAR | Help System | HELP SYSTEM Start Page

Table A-1. Front Panel Hard Keys and Functions (3 of 8)

Key Name	Primary Functions
Preset Key	Returns the instrument (or presets it) to the last active configuration preset loaded as defined and set in the PRESET SETUP menu. Depending on the user-set preset configuration, this can be either: – User Defined: A previously saved user-defined state. – Default: The factory as-shipped state. – Default 0: The factory original setting. The user selects which preset mode is used. Navigation Path: MENU BAR | Utilities | UTILITIES Drop-Down Menu | Preset Command Preset Configuration: MAIN | System | SYSTEM | Setup | SETUP | Preset Setup | PRESET SETUP menu

Frequency, Power, and Sweep Setup Key Group

Frequency Key	Pressing **Frequency** displays the FREQUENCY menu in the user interface display. Navigation Path: MAIN | Frequency | FREQUENCY menu
Power Key	Pressing **Power** displays the POWER menu in the user interface display. Navigation Path: MAIN | Power | POWER menu
Sweep Key	Pressing **Sweep** displays the SWEEP menu in the user interface display. Navigation Path: MAIN | Sweep Setup | SWEEP SETUP menu
Average Key	Pressing **Avg** displays the AVERAGING menu in the user interface display. Navigation Path: MAIN | Averaging | AVERAGING menu

Table A-1. Front Panel Hard Keys and Functions (4 of 8)

Key Name	Primary Functions
Response, Display, Scale, and Marker Key Group	
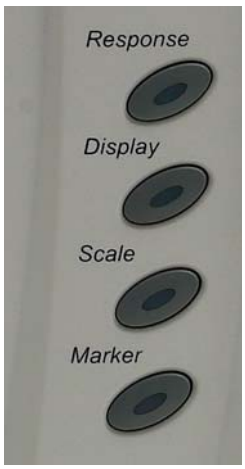	
Response Key	Pressing **Response** displays the Response menu in the user interface display. The RESPONSE menu displayed depends on whether the instrument is in 2-Port or 4-Port mode. Navigation Path: MAIN | Response | RESPONSE menu
Display Key	Pressing **Display** displays the Display menu in the user interface display. Navigation Path: MAIN | Display | DISPLAY menu
Scale Key	Pressing **Scale** displays the Scale menu in the user interface display. Navigation Path: MAIN | Scale | SCALE menu
Marker Key	Pressing **Marker** displays the Marker menu in the user interface display. Navigation Path: MAIN | Marker | MARKERS [1] menu
Channel and Trace Key Group	
Channel Key	Pressing **Channel** displays the Channel menu in the user interface display. Navigation Path: MAIN | Channel | CHANNEL menu
Trace Key	Pressing **Trace** displays the Trace menu in the user interface display. Navigation Path: MAIN | Trace | TRACE menu

Table A-1. Front Panel Hard Keys and Functions (5 of 8)

Key Name	Primary Functions
Navigation and Data Entry Keys	
Rotary Knob	The operation of the Rotary Knob varies depending on the cursor focus. On selections, rotating the **Rotary Knob** clockwise moves the selection down. Rotating counterclockwise moves the selection up. On menus, moves the button focus up or down. On field toolbars, increases or decreases the field value. Pressing the **Rotary Knob** starts the action of the selected menu button or applies the input value of the selected field toolbar.
Up Arrow Key	Pressing **Up** moves the cursor or selection up.
Down Arrow Key	Pressing **Down** moves the cursor or selection down.
Left Arrow Key	Pressing **Left** moves the cursor or selection to the left.
Right Arrow Key	Pressing **Right** moves the cursor or selection to the right.
Select Key	Pressing **Select** starts the action of the selected menu button. Same as pressing the **Rotary Knob**.

Table A-1. Front Panel Hard Keys and Functions (6 of 8)

Key Name	Primary Functions
Keypad and Data Entry Key Group	
Keypad Digit Keys	Used to enter digits from **0 (zero)** to **9 (nine)**.
. (Decimal) Key	Used to enter a decimal point.
+/- (Plus/Minus) Key	Toggles an entered value between **+ (plus)** and **– (minus)**.
Backspace / Delete Key	Deletes characters and moves the cursor to the left.
Enter Key	Causes the user-defined value or the field toolbar value to be entered into the instrument.
Clear/Tab Key	Clears the value of a field or tabs forward to the next field.

Table A-1. Front Panel Hard Keys and Functions (7 of 8)

Key Name	Primary Functions
	Test Port 1 and Loop Connectors
Test Port 1	Universal Test Port Connector. K (m) for MS4642A and MS4644A. V (m) for MS4645A and MS4647A. Damage Input Levels: +27 dBm max., 40 VDC max. Exchangeable in case of damage.
Port 1 Source	Source paths, ≥ 2.5 GHz coverage. K (f) for MS4642A and MS4644A. V (f) for MS4645A and MS4647A. Damage Input Levels: +20 dBm max., 0 VDC max. Optional. Included with Option 051, 061, and 062. This port is also used to interface with MN469xB Series 4-Port Test Sets and ME7828x Series Broadband/Millimeter Wave Systems.
b_1 Test Receiver - Port 1	Test receiver paths. As above. Optional. Included with Option 051, 061, and 062.
a_1 Reference Receiver - Port 1	Reference receiver paths. As above. Optional. Included with Option 051, 061, and 062.

Table A-1. Front Panel Hard Keys and Functions (8 of 8)

Key Name	Primary Functions
Test Port 2 and Loop Connectors	
Test Port 2	Universal Test Port Connector. K (m) for MS4642A and MS4644A. V (m) for MS4645A and MS4647A. Damage Input Levels: +27 dBm max., 40 VDC max. Exchangeable in case of damage.
Port 2 Source	Source paths, ≥ 2.5 GHz coverage. K (f) connectors for the MS4642A and MS4644A VNAs. V (f) connectors for the MS4645A and MS4647A VNAs. Damage Input Levels: +20 dBm max., 0 VDC max. Optional. Included with Option 051, 061, and 062. This port is also used to interface with MN469xB Series 4-Port Test Sets and ME7828x Series Broadband/Millimeter Wave Systems.
b_2 Test Receiver - Port 2	Test receiver paths. As above. Optional. Included with Option 051, 061, and 062.
a_2 Reference Receiver - Port 2	Reference receiver paths. As above. Optional. Included with Option 051, 061, and 062.
Front Panel USB Ports	
USB Ports	USB 2.0 Type A Ports, two (2) each. For peripherals such as keyboard, mouse, memory stick, or hardware key. There are two additional USB 2.0 Type A Ports located on the rear panel.

A-4 Rear Panel Ports and Connectors

The MS4640A Series VNA rear panel connectors are shown below in Figure A-3. The following figure, Figure A-4, “Schematic of typical MS4640A Series VNA Rear Panel Ports and Connectors” provides identification of each connector and port.

Typical VectorStar Rear Panel. The Rear Panel appearance varies depending in instrument model, phase, and equipped options.

Figure A-3. Typical MS4640A Series VNA Rear Panel

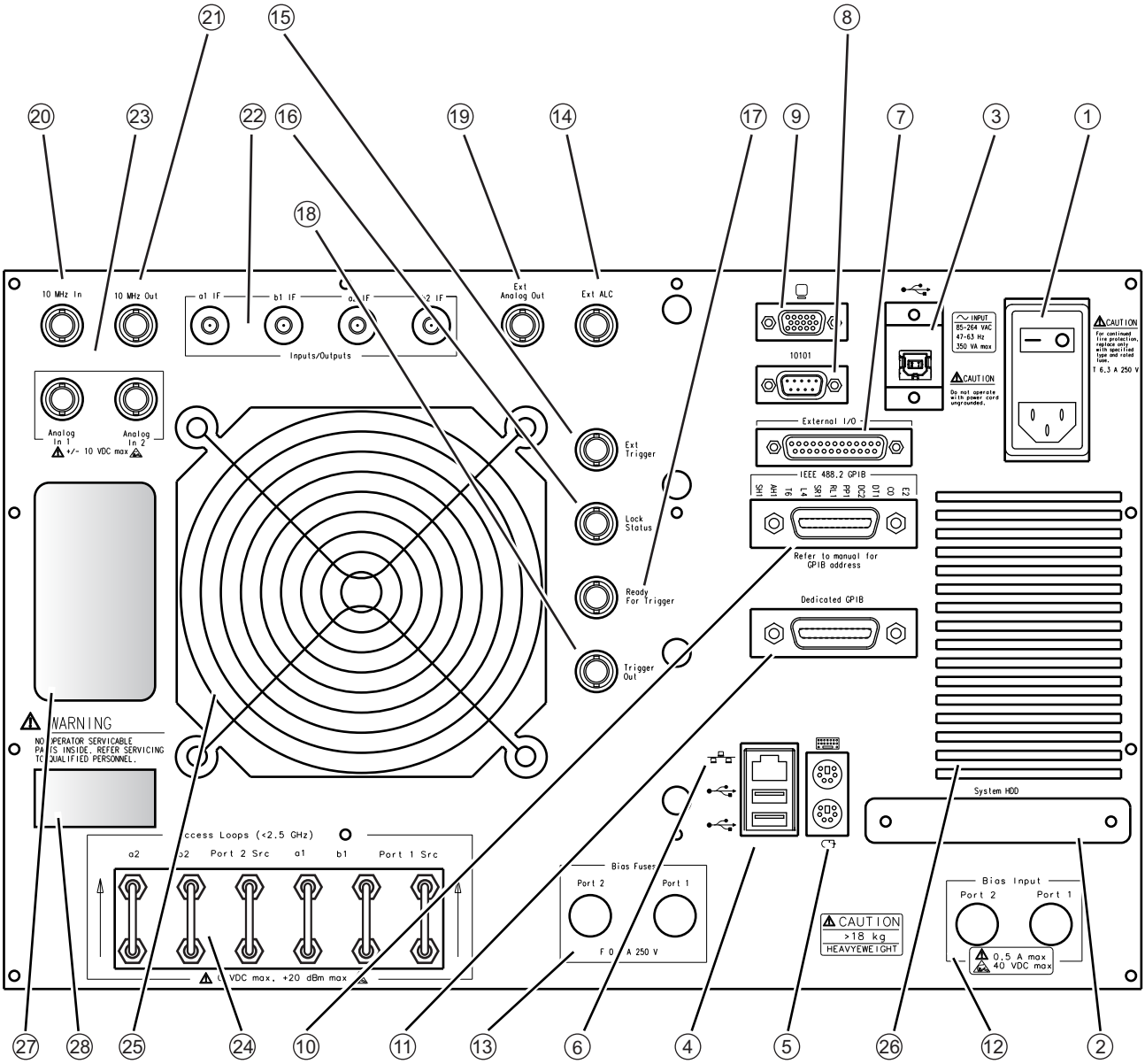

Figure A-4. Schematic of typical MS4640A Series VNA Rear Panel Ports and Connectors (1 of 2)

Right Side

All ports and controls are standard and equipped on all models unless otherwise noted.

1. AC Input Module Connector: Contains the AC Power Rocker Switch, the AC Power Internal Fuses (located under the switch), and the IEC C14 Chassis AC Power Socket.
2. System SSD/HDD: The internal system solid state or hard disk drive.
3. USB 2.0 Type B Port: USB connection when instrument is controlled by another USB controller.
4. USB 2.0 Type A Ports: USB connection ports for computer peripheral devices such as a printer, keyboard, or mouse. Note that there two (2) additional USB 2.0 Type A Ports on the front panel.
5. Keyboard PS/2 Mini-DIN Port and Mouse PS/2 Mini-DIN Port
6. 10/100BaseT Ethernet Port: RJ-45 LAN port.
7. External I/O 25-pin D-Sub Connector (f)
8. Serial (10101) 9-pin D-Sub Connector (f): A standard RS-232C serial port for computer peripherals. Also for instrument control of special purpose peripherals such as AutoCal calibrator modules.
9. XGA/VGA 15-pin D-Sub Connector (f)
10. IEEE 488.2 GPIB (f) Port: GPIB port for GPIB talker/listener.
11. Dedicated GPIB (f) Port: GPIB port for control of peripheral devices such as a Power Meter or External Source.
12. Bias Input Ports: Bias Input Port 2 (on left) and Bias Input Port 1 (on right)
13. Bias Fuses: Bias Fuse Port 2 (on left) and Bias Fuse Port 1 (on right)

Center

14. Ext. ALC BNC (f) – External Automatic Leveling Control.
15. Ext. Trigger BNC (f) – External Trigger.
16. Lock Status BNC (f)
17. Ready for Trigger BNC (f)
18. Trigger Out BNC (f)
19. Ext. Analog Out BNC (f) – External Analog Out.

Left Side

20. 10 MHz In BNC (f)
21. 10 MHz Out BNC (f)
22. IF Input/Outputs: a1 IF Input/Output (on left), b1 IF Input/Output (on left center), a2 IF Input/Output (on right center), and b21 IF Input/Output (on right)
23. Analog Inputs: Analog In 1 (on left) and Analog In 2 (on right)
24. Access Loops: Optional. Only equipped with Option 051, 061, or 062. If equipped, the < 2.5 GHz Access Loops are (from left to right): a2 Access Loop, b2 Access Loop, Port 2 Src Access Loop, a1 Access Loop, b1 Access Loop, and Port 1 Src Access Loop.
25. Fan Grill
26. Internal Air Cooling Opening
27. Microsoft Windows 7 or Windows XP Software License Sticker
28. Anritsu Company Instrument Serial Number and Installed Options Sticker: The sticker lists the instrument serial number and the part numbers of all factory-installed options. If an instrument is returned to the factory for the addition of a new option, the sticker is updated at that time to reflect all installed options.

Figure A-4. Schematic of typical MS4640A Series VNA Rear Panel Ports and Connectors (2 of 2)

Rear Panel Port and Connector Descriptions

A summary of the MS4640A Series VNA rear panel connectors is available in Table A-2 below. The table defines the name of each connector, its type, general specifications, and may provide a cross reference to a connector pin-out diagram later in this chapter.

Table A-2. Rear Panel Connectors (1 of 10)

Connector Name	Primary Function / Cross References
AC Power Connectors and Controls 	
AC Power Input Module	Contains the **AC Power Rocker Switch**, the **AC Power Internal Fuses** (under the switch) and the **IEC C14 Chassis AC Power Socket**, described in rows below.
AC Power Rocker Switch	**Power On** Used to the turn the VNA on and off where "**|**" is ON and "**O**" is OFF. **Standby to Operate Mode** Once turned on, the VNA is in standby mode. On the front panel, press and hold the left side **Standby/Operate** key for at least one (1) second to place the VNA in operate mode. **Operate to Standby Mode** With the VNA in operate mode, press and hold the **Standby/Operate** key for at least one second to return the VNA to standby mode. **Power Off** Only turn off the VNA when it is in standby mode. Do not disconnect the AC power while the VNA is in operate mode. Do not turn off the VNA while it is in operate mode.

Table A-2. Rear Panel Connectors (2 of 10)

Connector Name	Primary Function / Cross References
AC Power Internal Fuses	Use the tab in the **AC Power Rocker Switch** (described above) to remove the fuse cover and access the fuses. Two (2) T-Type 6.3 A 250 Volt internal fuses Rated for 700 VA max. 90-264 VAC, 47-63 Hz (power factor controlled)
IEC C14 Chassis AC Power Socket	Allows for a cable connection to AC mains power using the IEC C13 AC Line Socket on the provided power cord. The other end of the provided power cord provides a plug suitable for the instrument location.

USB Control Port

USB Control Port	USB 2.0 Type B Port For controlling the instrument externally and for remote operation.

XGA/VGA and Serial Ports

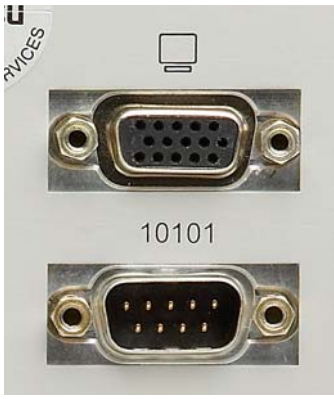

XGA/VGA Video Port	15-pin Mini D-Sub (f) Connector For simultaneously projecting the instrument's screen display onto an external VGA monitor, with minimum resolution of 1024 x 768.

Table A-2. Rear Panel Connectors (3 of 10)

Connector Name	Primary Function / Cross References
Serial Port	9-pin Mini D-Sub (f) Connector Compatible with RS-232C. Provides control for AutoCal modules and other accessories.

External Analog Out Ports

Ext Analog Out	BNC (f) Connector External Analog Output. For external attenuator control, external switch control, analog triggering assistance, measurement system integration and other purposes. Normal operating modes: Sawtooth sync sweep, TTL indication of driving port, open loop level controller. Range: -10 V to +10 V; low impedance drive. Accuracy: 20 me + 2%.
Ext ALC	BNC (f) Connector External Automatic Level Control.

Table A-2. Rear Panel Connectors (4 of 10)

Connector Name	Primary Function / Cross References
IF Input/Output Loop Connectors	
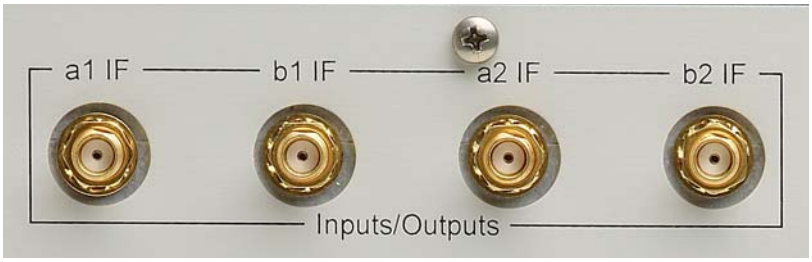	
Input/Outputs a1 IF	SMA (f) Connectors Inputs used with external converters such as Millimeter Wave (mmW) modules, or for antenna testing. Outputs used with external IF digitizers and processors. Nominal Inputs: 5 to 20 MHz (mode dependant), 0 dBm for full scale Nominal. Outputs: 0.2 to 100 MHz (mode dependant), +10 dBm max. These ports also used to interface with the VectorStar ME7828x Broadband/Millimeter Wave Systems.
Input/Outputs b1 IF	SMA (f) Connectors As above.
Input/Outputs a2 IF	SMA (f) Connectors As above.
Input/Outputs b2 IF	SMA (f) Connectors As above.
10 MHZ Input/Output Ports	
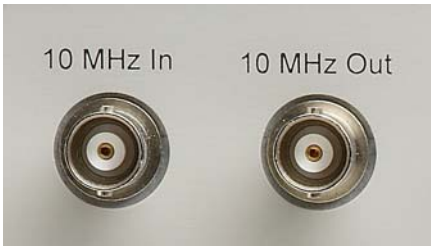	
10 MHz In	BNC (f) Connector Auto-sensing, better than 1,000 ppm accuracy recommended. Signal: –10 dBm to +3 dBm, Nominal 50 Ohms.
10 MHz Out	BNC (f) Connector Derived from the internal reference time base, unless an external 10 MHz reference input is applied. 0 ± 5 dBm sinusoidal, 50 Ohms

Table A-2. Rear Panel Connectors (5 of 10)

Connector Name	Primary Function / Cross References
External I/O and GPIB Ports	
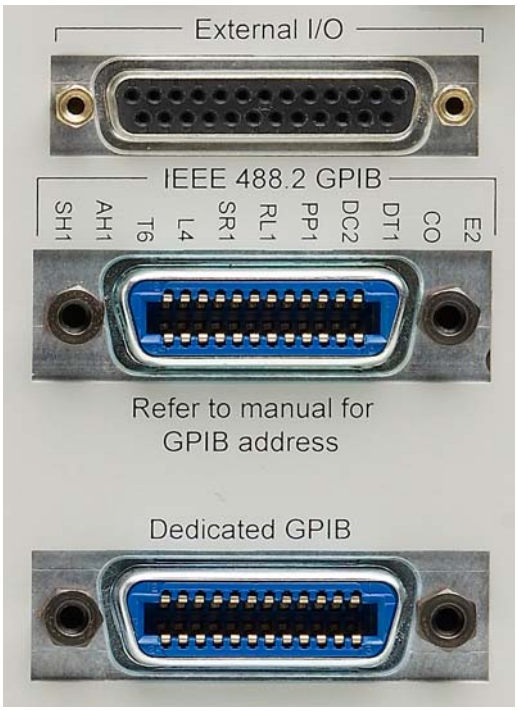	
External I/O Port	25-pin D-Sub (f) connector. User-defined I/O for custom external test set interface, to synchronize with different sweep states, such as Start, Stop, or Driven Port. See Figure A-5, “External I/O DB-25P Connector Pinout Diagram” on page A-26 below for the pin out diagram.
IEEE 488.2 GPIB Port	24-Pin (f) GPIB Connector GPIB talker/listener port IEEE 488.2 compatible, for controlling the instrument externally, for remote operation.
Dedicated GPIB Port	24-Pin (f) GPIB Connector. Dedicated GPIB controller port For the control of external instruments such as power meters, external test sets, or other GPIB compatible accessories.

Table A-2. Rear Panel Connectors (6 of 10)

Connector Name	Primary Function / Cross References
External Trigger and Lock Ports	
Ext Trigger	BNC (f) Connector External Trigger
Lock Status	BNC (f) Connector Trigger Lock Status
Ready for Trigger	BNC (f) Connector
Trigger Out	BNC (f) Connector

Table A-2. Rear Panel Connectors (7 of 10)

Connector Name	Primary Function / Cross References
Analog In Ports	
Analog In 1	BNC (f) Connector Independent input for measurements simultaneous with the RF measurements, for current sensing, efficiency computation, and power detection. Range: –10 V to +10 V with automatic offset and gain calibrations. Accuracy: 2 mV + 2% for |V| < 5 V; 2% for |V| > 5 V Nominal input impedance: 60 K Ohms.
Analog In 2	BNC (f) Connector As above.
System Solid State Drive (SSD) or Hard Disk Drive (HDD)	
System HDD	The system removable solid state or hard disk drive. If spare drives are available, the SSD/HDD can be quickly exchanged for security or other reasons.

Table A-2. Rear Panel Connectors (8 of 10)

Connector Name	Primary Function / Cross References
Network, USB, and PS2 Connectors	
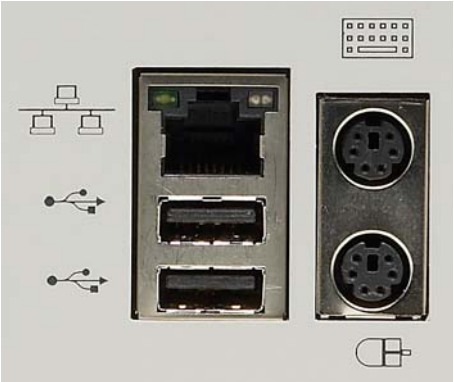	
LAN Ethernet Port	10/100BaseT Ethernet RJ-45 Connector. Standard.
USB 2.0 Type A Ports	USB 2.0 Type A Ports, two (2) on Rear Panel. For peripherals such as keyboard, mouse, memory stick, and hardware key. There are two additional USB 2.0 Type A Ports located on the front panel.
Keyboard/Mouse PS/2 Ports	Dedicated Mini-DIN PS/2 ports, two (2) on Rear Panel. Used to connect a PS/2 keyboard and/or a PS/2 mouse. With a user-supplied **PS/2 to USB** adapter, can be used to connect a USB keyboard and USB mouse, sparing the USB 2.0 ports for additional peripherals.
Bias Input Ports	
Bias Input Port 1 Connector	BNC (f) Connector. One input per Bias Input Port Optional. Equipped with Option 051, 061, or 062.
Bias Input Port 2 Connector	BNC (f) Connector. As above.

Table A-2. Rear Panel Connectors (9 of 10)

Connector Name	Primary Function / Cross References
	Bias Fuses
Bias Fuse Port 1	Fuse Connector Included with optional Bias Input Ports above. One fuse per Bias Input Port Fuses are F-Type rated at 0.5 A, 250 V.
Bias Fuse Port 2	Fuse Connector As above.

Table A-2. Rear Panel Connectors (10 of 10)

Connector Name	Primary Function / Cross References
Access Loops (< 2.5 GHz)	
a2 Access Loop	SMA (f) port with SMA (m) loop. Receiver path for Port 2 For <2.5 GHz frequency coverage. Damage Input Level: +20 dBm max., 0 VDC max.
b2 Access Loop	SMA (f) port with SMA (m) loop. Test receiver path for Port 2. Specifications as above. Also used to connect with the VectorStar MN469xB 4-Port (Multi-Port) Test Sets.
Port 2 Src Loop	SMA (f) port with SMA (m) loop. Port 2 Source path. Specifications as above. Also used to connect with the VectorStar MN469xB 4-Port (Multi-Port) Test Sets.
a1 Access Loop	SMA (f) port with SMA (m) loop. Receiver path for Port 1 Specifications as above.
b1 Access Loop	SMA (f) port with SMA (m) loop. Test receiver path for Port 1. Specifications as above. Also used to connect with the VectorStar MN469xB 4-Port (Multi-Port) Test Sets.
Port 1 Src Loop	SMA (f) port with SMA (m) loop. Port 1 Source path. Specifications as above. Also used to connect with the VectorStar MN469xB 4-Port (Multi-Port) Test Sets.

A-5 External I/O Port Pinout

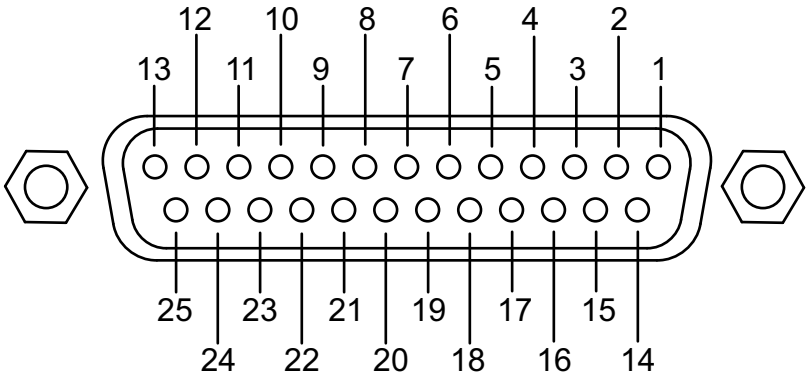

Pin	Name	Description
1	Limit Pass/Fail	Indicates the results of limit testing for all channels. User selectable from the Limit Line setup menu. (0 V to 3.3 V) TTL-high = Fail or TTL-low = Fail.
2, 3, 15, 16	TTL In	Configurable as a digital input for use in sending information to the instrument from external sensors or input devices. The inputs are TTL compatible and 5 V tolerant.
4, 13, 14, 21	GND	Digital signaling ground.
5 - 12, 17-20, 22	TTL Out	Configurable as a digital output for use in sending information to external devices, handlers, and output processors. The outputs are 0 V low and +3.3 V high and are TTL compatible.
23 - 25.	Reserved	Reserved controlling Anritsu external test sets.

Figure A-5. External I/O DB-25P Connector Pinout Diagram

Appendix B — Recommended VectorStar Maintenance Fixtures

B-1 Introduction to Fixtures

This chapter provides information for recommended assembly and maintenance fixtures for servicing the VectorStar VNA.

B-2 T3545 RF Deck Fixture

The T3545 RF Deck Fixtures attaches to a removed RF Deck (any model with any combination of options) in order to service deck mounted modules and PCBs. The fixture protects protruding top and bottom loops. It attaches to any RF Deck using four (4) M5 x 8 mm screws that originally mounted the RF Deck in the MS4640A main chassis. If multiple uses are anticipated, obtain Knurled Head M5 x 8 mm screws to speed fixture setup.

If required by the customer, the T3545 Fixture can be purchased from Anritsu or easily manufactured locally using the specifications in the figure below.

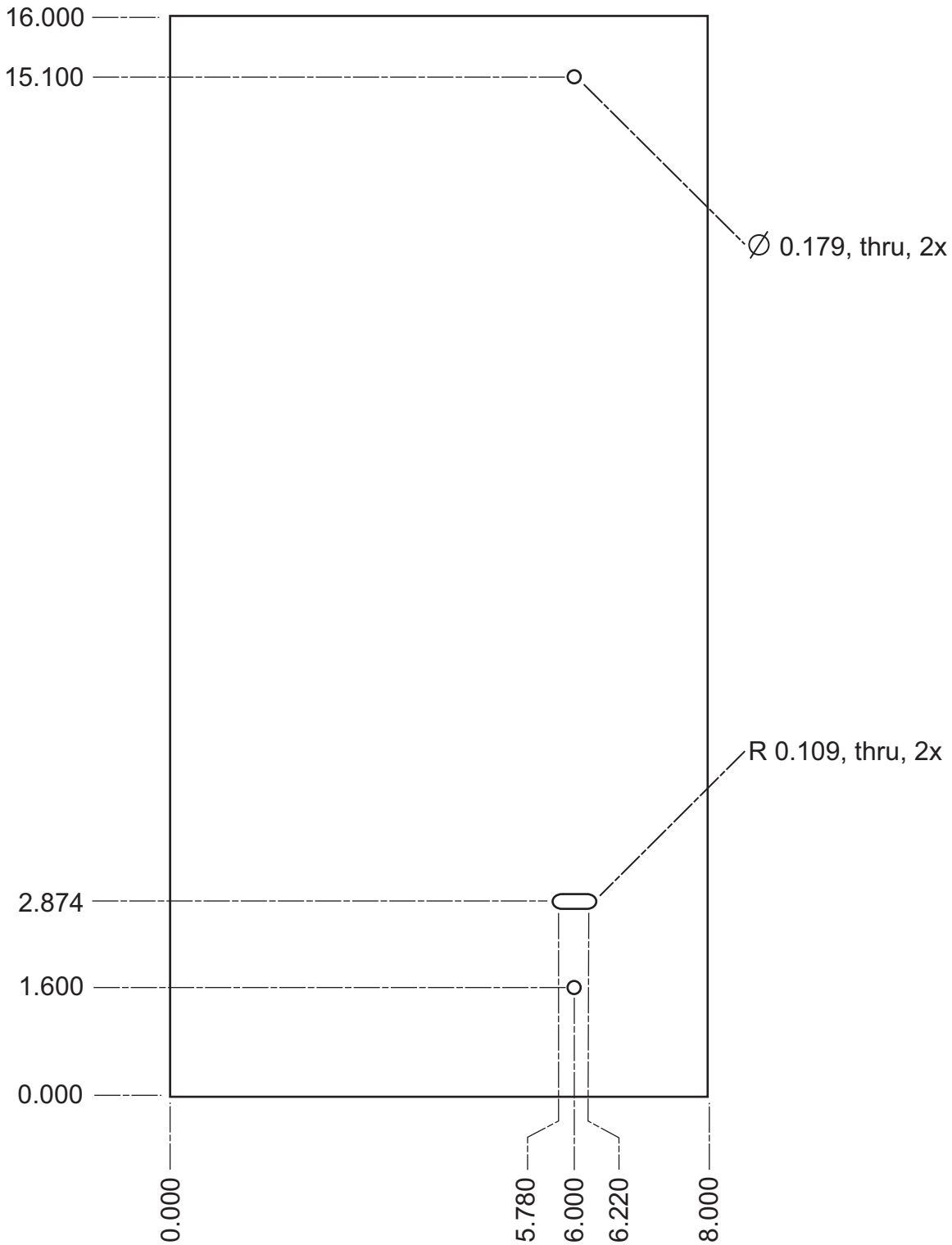

Dimensions in inches, Aluminum, 0.090” Thick, Break Corners and Edges

Figure B-1. T3545 – RF Deck Maintenance Fixture – 62036

The RF Deck Fixture above can be ordered from Anritsu or manufactured locally.

Appendix C — Full Disassembly Procedure

C-1 Introduction

This chapter provides information for the full disassembly of the instrument to its component sub assemblies and also provides information in some cases for disassembling subassemblies into their components. These procedures are not recommended for service or replacement but only for instrument scrapping.

Caution	Do not use the procedures is this chapter for servicing the instrument. Only use these procedures to scrap the instrument.

C-2 Full Disassembly Procedures

These procedures describe how to fully disassemble the VNA. They are not recommended as replacement procedures.

Disassembly into Main Assemblies

The procedure below is a summary of how to disassemble the VectorStar MS4640A Series VNA down to its major replaceable assemblies. Once the RF Deck is removed, it is attached to a T3545 Fixture and component-level disassembly continues.

Covers and Handles

1. To begin instrument breakdown, carefully stand the instrument on its front handles. Be careful to not tip the instrument over.
2. Remove the four (4) rear screws from the Rear Foot holders. The Rear Feet stay attached to the Outer Cover.
3. Using the foot holders as leverage, pull the Outer Cover up and remove from instrument.
4. If required, remove the Rear Feet from the Outer Cover by removing the remaining hardware from the sides of the Outer Cover.
5. The Front Panel Handles will be removed later in this process.
6. Remove the Inner Top Cover by removing hardware in 15 places. As each sub-assembly is removed, set it aside to be dismantled later in the process.
7. Orient the instrument with the RF Deck at the bottom of the instrument. Use a padded fixture or board about 50 mm (~2 inches) thick and place it about 16 cm (~6 inches) from the Front Panel and underneath the instrument. Elevate the front of the instrument from the cart or bench.

Front Panel Removal

8. Remove the side hardware connecting the Front Panel to the chassis.
9. Slide the Front Panel forward and place it face down on cart. The Front Panel loops (if equipped) stay on the RF Deck. Remove the Front Panel Cable tie down bracket with a screwdriver.
10. Using tweezers, pull the Front Panel Flex PCB Cable locking tabs up in two (2) places. Slide the Flex PCB cable up and out of the connector. Pull up the standard ribbon cable out of its connector. The Flex PCB cable and the ribbon cable are permanently attached to the Front Panel assembly.
11. Remove the Front Panel from the instrument and set aside.

Rear Panel Removal

12. Remove the Rear Panel SATA Solid State Drive (SSD) or the Hard Disk Drive (HDD) by loosening the hardware in two (2) places and then gently pull out the HDD from its Motherboard 2 PCB connector.

13. At the Rear Panel, remove the hardware in four (4) places from the AC Power Module and let it gently hang loose. The AC Power Module is permanently attached to the Power Supply Module.

14. Remove the Rear Panel Sub-Panel hardware and set the sub-panel aside.

15. Remove the fastening hardware screws from the Rear Panel in 12 places.

16. Pull the Rear Panel Assembly back from the chassis and disconnect the remaining cables from the panel to the Motherboard 1 PCB.

Printed Circuit Boards – Top Side and Right Side

17. Disconnect all flex, ribbon, and semi-rigid cables from the RF Deck to the A11, A13, and A15 analog modules. Use a 5/16” torque end wrench set to 8 lbf · in to remove the semi-rigid cables.

18. Disconnect all flex, ribbon, and semi-rigid cables from the A11, A13, and A15 analog modules.

19. Disconnect all flex, ribbon, and semi-rigid cables from the Sampler/LO Distribution Module Assembly.

- This assembly consists of the A111 LO Distribution Module, the A100, A101, A102, and A103 Sampler Modules, and the A130 LO Coupler Module.
- Cables route from the assembly modules to the analog module assemblies and to the RF Deck Front Panel.

20. Disconnect all flex, ribbon, and semi-rigid cables from the top side digital A3 through A10 PCBs.

21. Disconnect all cables going to the Motherboard 2 PCB Assembly.

22. Loosen the screws from the ejectors for PCBs A3 thru A10 and remove all hardware from the A11, A13, and A15 modules.

23. Pull all PCBs and modules out of the chassis and set aside.

RF Deck Tray – Bottom Side

24. Carefully turn the instrument upside down and remove five (5) mounting screws on each side wall that hold the RF Deck in place. In the bottom side center of the RF Deck, remove mounting screws that hold the deck to the chassis in eight (8) places.

25. Remove the RF Deck from the chassis by pulling it from the front and then up and slightly forward to clear the chassis.

26. Carefully turn the instrument right side up with access to the two PCB bays.

Printed Circuit Board – Top Side

27. To remove the chassis wall, remove hardware in 14 places from left side wall and two (2) places from the bottom side. Remove the chassis wall.

28. Unplug the Power Supply cables from the Motherboard 2 PCB Assembly and cutoff the tie wraps that hold down power supply and fan cables to the PCB guide. Remove the kep nut hardware on the Power Supply Module ground cables that are connected to the chassis wall.

29. Remove the four (4) screws holding the Power Supply to the PCB Guide on the chassis. Slide out the Power Supply Module, gently threading its cables and Power Supply Line Module along with it.

30. Remove the tap strips mounting hardware in two (2) places on the top extrusion. Remove the tap strips.

31. Disconnect the Digital Section Fan Assembly from the Motherboard 2 PCB Assembly.

32. Turn the chassis on its side and remove hardware in two (2) places from the Motherboard 2 PCB assembly which hold the tap strips in place. Remove the tap strips from the bottom extrusions.

33. Place instrument back down onto cart.

34. Disassemble the remaining chassis walls by removing the appropriate hardware.

C-3 Disassembly Overview for Individual Components

If required, the procedures below describe how to disassemble each component. These procedures are not recommended for field level repairs.

SATA Hard Disk Drive

1. Remove the left and right side brackets from the SATA Drive by removing hardware in four (4) places. Then slide the SATA Drive out from between its brackets.
2. Disassemble the dress plate from the side brackets by removing hardware in two (2) places.
3. Peel off the insulator gasket from the SATA Drive and the captive screws from the dress plate in two (2) places.

A11 IF Band Module

1. Orient the A11 IF Band Module with the top hardware facing up.
2. Remove top cover RF shield by removing hardware in 31 places.
3. Lift the top cover RF shield from the module. Lift the PCB off of the bottom cover RF shield.
4. Peel off the RF absorber and spiral gasket from the top cover RF shield.

A13 Source Module

1. Orient the A13 Source Module with the top hardware facing up.
2. Remove the top cover RF shield by removing hardware in 61 places.
3. Remove the PCB from the bottom cover RF shield by removing hardware in six (6) places.
4. Peel off the thermal pads in three (3) places from the bottom cover RF shield.
5. Peel off the RF absorbers from the top cover RF shield in 16 places.

A15 Low Band Receiver Module

1. Orient the Low Band Receiver Module with the hardware facing up.
2. Remove the hardware from top cover RF shield in 42 places.
3. Remove the PCB from the bottom cover RF shield by removing hardware in 10 places.
4. Peel off the absorber gasket from top cover RF shield in four (4) places.

Power Supply Module

1. Remove the power supply bracket from the Power Supply Module by removing hardware in four (4) places on the bottom side.
2. Disconnect the AC Line Module input cables from the Power Supply Module. The cables are colored Brown, Blue, and Green with Yellow Strips. Use a long neck screwdriver to remove hardware in three (3) places.
3. Unplug the standby power supply cable by pulling on cable connector until it pulls out of the connector housing.
4. Disconnect the Power Supply Cable by removing hardware in 14 places from the Power Supply Module.

Rear Panel

1. Place the Rear Panel Assembly in a fixture or vise to keep it stable. Unplug the coaxial cables from the A17 Rear Panel PCB.
2. Disconnect the ground cable from the fan guard to the Rear Panel by removing the nut on the fan and the screw on the Rear Panel.
3. Remove the rear panel fan and fan guard from the Rear Panel by removing four (4) sets of screws and washers. Remove the four (4) fastener clips from the fan.
4. Pop out the standoffs and vibration isolation grommets from the Rear Panel.
5. Remove all Rear Panel BNC cables.
6. Remove each cable assembly from each BNC connector body by using an open end wrench.
7. Using a socket wrench, remove each BNC connector from the Rear Panel.
8. Remove the SMA to MCX coaxial cables by removing the hardware from the front side of the Rear Panel.
9. Remove eight (8) standoffs from the outside of the Rear Panel on the Serial I/O, External I/O, IEEE 488.2 GPIB, and Dedicated GPIB port connectors.
10. At the inside of the Rear Panel, remove the mounting hardware in five (5) places.
11. Pull the A17 PCB out of the Rear Panel.
12. Remove the adapter on the Rear Panel by removing hardware in two (2) places and slide out of cutout.
13. Disconnect the VGA/XGA video cable and connector by removing the nut and standoff in two (2) places.
14. Remove the Rear Panel hole plug.
15. Remove cable clamps in two (2) places.

Digital and Analog Fan Assemblies

1. Remove the fan from DC fan bracket by removing screws and washers in four (4) places.
2. Remove the fastener clips in four (4) places from the fan.
3. Remove the standoffs and grommets in four (4) places from the bracket.

A3 Single Board Computer (SBC) PCB Assembly

1. Unplug the USB cable from the A4 USB PCB Assembly.
2. Lift the tabs up on the A3 SBC PCB and remove it from the card cage.
3. Remove the hardware on the front and rear of the A3 PCB.
4. Remove the standoffs and mounting hardware in two (2) places from the A4 PCB.
5. Feed the USB cable through the slot in the A3 PCB and set aside the A4 PCB.
6. On the A3 PCB, slide the battery out from battery holder.
7. Remove the hardware from the A3 PCB panel ejector and separate the panel from the PCB.
8. Separate the plastic ejector from the panel by removing existing hardware.

A6 cPCI-PMC Adapter Card PCB Assembly

1. Remove the hardware on the front and back side of the A7 Graphics Adapter PCB Assembly and the A8 GPIB Module PCB Assembly in six (6) places.
2. Remove the standoffs.
3. Remove the A7 PCB from the A6 PCB.
4. Remove the A8 PCB from the A6 PCB.

5. Remove the hardware from the A6 PCB panel ejector and separate the panel from the PCB.
6. Separate the plastic ejector from the panel by removing existing hardware.
7. Remove all cable assemblies.

RF Deck Disassembly

1. Begin breakdown of deck by disconnecting all coaxial, flex, and semi-rigid coaxial cables from the top and bottom of deck, including cables going to the Sampler/LO Distribution Module Assembly.
   - This assembly consists of the A111 Sampler/LO Distribution Module, the A100, A101, A102, and A103 Sampler Modules, and the A130 LO Coupler Module.
   - Cables route from the assembly modules to the analog modules and to the RF Deck Front Panel.
   - Use a 5/16 end wrench to remove semi-rigid cables.
2. Remove all cables from the top side of the deck.
3. Remove all cables from the bottom side of the deck.
4. Remove all components and modules from the RF Deck Top Side.
5. For each module, remove all coupling nuts and adapters.
6. Remove all components and modules from the RF Deck Bottom Side.
7. For each module, remove all coupling nuts and adapters.
8. Remove mounting hardware in 20 places that holds in the A18 RF Control PCB Assembly.
9. Remove the A8 PCB from the deck.
10. Remove all connectors from the RF Deck Front Panel.
11. Separate components from brackets by removing any existing hardware that is keeping them attached together.

Appendix D — Test Record

D-1 Introduction

Use this appendix to print out and record test, calibration, and verification information. The following test records are available:

- Section D-2 “Log Magnitude Dynamic Accuracy” on page D-2.

D-2 Log Magnitude Dynamic Accuracy

This appendix section provides the test record that can be used to record the result of the Log Magnitude Dynamic Accuracy Test. Make a copy of the following Test Record pages and document the test results each time the Log Magnitude Dynamic Accuracy Test is performed.

MS4640A Log Magnitude Dynamic Accuracy Test

Instrument Information			
Model:		**Serial Number:**	
Options:			
Comments:			
Operator:		**Date:**	

Table D-1. Measured S21 Values and Calculated Step Attenuator Attenuation Values

Measured S21 values											
Step Attenuator Setting	**Pass #1**	**Pass #2**	**Pass #3**	**Pass #4**	**Pass #5**	**Pass #6**	**Pass #7**	**Pass #8**	**Pass #9**	**Pass #10**	
0 dB											
10 dB											
20 dB											
30 dB											
40 dB											
50 dB											
60 dB											
70 dB											
80 dB											
	Calculated Step Attenuator Attenuation Values										**Mean Value**
10 dB											
20 dB											
30 dB											
40 dB											
50 dB											
60 dB											
70 dB											
80 dB											

D-3 MS4640A Log Magnitude Dynamic Accuracy Test Record

MS4640A Log Magnitude Dynamic Accuracy Test Worksheet

Instrument Information			
Model:		**Serial Number:**	
Options:			
Comments:			
Operator:		**Date:**	

Table D-2. Attenuation Calculated Upper Limits, Mean Values, Lower Limits, and Pass/Fail

A	B	C	D	E	F	
Attenuation Device Nominal Value	**Attenuation Device Characterized (or Traceable) Value**	**Composite Uncertainty**	**Upper Limit (Col. B + Col.C)**	**Mean Value**	**Lower Limit (Col. B – Col. C)**	**Pass or Fail**
– 10 dB		0.15				
– 20 dB		0.15				
– 30 dB		0.15				
– 40 dB		0.20				
– 50 dB		0.25				
– 60 dB		0.28				
– 70 dB		0.50				
– 80 dB		1.20				

Appendix E — VectorStar Technical Data Sheet

E-1 Introduction

This manual tab provides a location for the **VectorStar MS4640A Series VNA Configuration Guide and Technical Data Sheet – 11410-00432**.

E-2 VectorStar Technical Data Sheet

This and many other documents are available on the Anritsu web site at www.anritsu.com. In the search field, enter “VectorStar” or “MS4640A” to find VectorStar VNA information.

Appendix F — Glossary

F-1 Introduction

This chapter provides a brief description of the abbreviations, acronyms, and general terms used in this maintenance manual.

F-2 Glossary and Abbreviations

051	For all VNAs, Option 051 Front Panel Loops
061	For all VNAs, Option 061 Front Panel Loops and Two Attenuators
062	For all VNAs, Option 062 Front Panel Loops and Four Attenuators
080	For MS4647A VNAs, Option 080 Broadband/Millimeter Wave for VNAs equipped with Standard No Option.
081	For MS4647A VNAs, Option 081 Broadband/Millimeter Wave for VNAs equipped with Option 051, 061, or 062
"	Inches
A Reference	See ERN, Engineering Reference “A” Number
A/D Converter	Analog to Digital Converter
a1	Reference “a” for Port 1
a2	Reference “a” for Port 2
ALC	Automatic Level/Leveling Control
Any Combination of Options	The procedure or part referenced is applicable to the indicated VectorStar models with any combination of equipped options which can be: • Standard No Options Installed • Option 051 Front Panel Loops • Option 061 Front Panel Loops and two Attenuators • Option 062 Front Panel Loops and four Attenuators.
APN	Anritsu Part Number
Assy	Assembly
ATA	Advanced Technology Attachment. See SATA.
AUX	Auxiliary
b1, b2	b1 means Test Channel numerator for S11/S12 measurements. b2 means Test Channel numerator for S21/S22 measurements.
BNC connector	Rear panel twist lock Bayonet Niell-Concelman connector.
bracket-to-chassis hardware	Mounting hardware, typically pan head Phillips screws, that holds a bracket/module assembly to the chassis. The bracket/module assembly consists of the module, fastening hardware or screws, and its bracket.
Cal	Calibration
Cal Kit	Calibration Kit
CB	Carrier Board PCB
cm	Centimeters

Connect	Mate two or more connectors. For power and signal cables, press the cable plug into the required socket. Most connectors of this type are keyed and can only go in one way. Cable and plug orientation and/or locking tabs are always noted. If the connection is a threaded RF connection (such as SMA, K, or V connectors or semi-rigid coaxial cables), make sure the connection is correctly aligned and threaded-on with a couple of turns. Do not tighten an RF connection until directed.
cPCI-PMC	Compact PCI
CPU	Central Processor Unit. See the A3 Single Board PCB Assembly.
DAC	Digital to Analog Converter
DDS	Direct Digital Synthesis
DIP	Dual-In-Line. Typically used as DIP Switch.
DRAM	Dynamic Random Access Memory
DSP	Digital Signal Processor
DUT	Device Under Test
ERN	Engineering Reference “A” Number
External Part	The referenced component can be serviced while the instrument covers remain in place.
Fasten	Insert mounting screws and/or other mounting hardware and loosely tighten a couple of turns without tightening. Usually insert all screws before tightening.
FP	Front Panel or front of instrument.
Front Panel Off	The referenced component can only be serviced after the Front Panel is removed.
GPIB	General Purpose Interface Bus
GPU	Graphics Processor Unit
HB LO	High Band Local Oscillator
HBTS	A108 High Band Transfer Switch Module – ND70092 – 66221. The module is installed on MS4642A and MS4644A models.
HBTS/VITS	Refers to both the A108 HBTS (above) and the A108 V Integrated High Band Transfer Switch Module – ND70093 – 66619. The VITS is installed on MS4645A and MS4647A VNAs.
HDD	Hard Disk Drive, SATA Interface – ND70071 – 62091
HET VCO	Heterodyne Voltage Controlled Oscillator
I/O	Input/Output
ID	Identification. Typically the rear panel ID Label.
IEEE	Institute of Electrical and Electronics Engineers
IEEE 488.2	IEEE Specification 488.2 for the General Purpose Interface Bus (GPIB)
IF	Intermediate Frequency
in	Inches
Install	Install a part, either new or replacement, into the instrument. The starting point assumption for these procedures is that the part described is removed from the instrument, and if replaced, all common required parts such as brackets and harnesses have been installed.
Internal Part	The referenced component can only be serviced after partial instrument disassembly.
ITS	Instrument Test Software. The current MS4640A Series VNA instrument test software is 2300-531-R. It is described in the **VectorStar MS4640A Series 2300-531-R Instrument Test Software Quick Start Guide – 10410-00291.**

Jn	Connector number “Jn” on the indicated location, typically on a PCB or panel. Also Pn for plugs.
JTAG	Joint Test Action Group, creators of IEEE 1149.1 Standard Test Access Ports architecture.
K connector	Trademarked Anritsu Company. A coaxial connector mechanically compatible with SMA, WSM, and 3.5 mm connectors with a rated frequency range from DC to 40 GHz.
LB LO	Low Band Local Oscillator
LBA	Low Band DC to 2.5 GHz Programmable Step Attenuator. These are mounted on the RF Deck Top Side and two are equipped with Option 061; four with Option 062. – Option 061 – A125, A127 – ND70084 – 3-2000-1502 – Option 062 – A124, A125, A126, A127 – ND70084 – 3-2000-1502
LBB	Low Band Bridge. The instrument is equipped with four (4) LBBs and all are ND70079 – 64016. On the RF Deck Top Side, the A116 LBB is the inner module and the A117 LBB is the outer module. On the RF Deck Bottom Side, the A118 LBB is in the Test Port 1 module group and the A119 LBB is in the Test Port 2 module group.
lbf · ft	Torque measured in pound-foot force or in popular parlance, “foot-pounds”. For example, underlying the front Test Ports are the Test Port Couplers which are held onto the RF Deck Front Panel with a nut and thrust washer and require a 13/16” deep socket and a torque wrench set to 15 lbf · ft (15 foot-pounds).
lbf · in	Torque measured in pound-force inch force or in popular parlance, “inch-pounds”. In general, SMA, K, and V connectors are torqued to 8 lbf · in (8 inch pounds) using a 5/16” Torque End Wrench – Anritsu 01-201 or equivalent. The front panel Test Port Adapters require a 1/2” torque end wrench set to 60 lbf · in (60 inch pounds).
LBS	A115 Low Band Switch – ND70079 – 64690
LCD	Liquid Crystal Display
LCD	Liquid Crystal Display
LO	Local Oscillator
LO	Local Oscillator
m	Meters
MB1	Motherboard 1 PCB Assembly – ND70069 – 61920-3
MB2	Phase 1 Motherboard 2 PCB Assembly – ND70070 – 61923-3 or Phase 2 Motherboard 2 PCB Assembly – ND73878 – 3-72813-3
MCX connector	Micro Coaxial Connector with a snap-on interface and a frequency range from DC to 6 GHz.
mm	Millimeters
Model Number	The VectorStar VNA is available in four basic models, mostly distinguished by the upper frequency limit of each model and the primary test port connectors in their default configurations. • The MS4642A VNA is 20 GHz with K connectors. • The MS4644A VNA is 40 GHz with K connectors. • The MS4645A VNA is 50 GHz with V connectors. • The MS4647A VNA is 70 GHz with V connectors.
module-to-bracket hardware	Mounting hardware, typically pan head Phillips screws, that holds one or more modules to a mounting bracket. The bracket is then fastened to the chassis with bracket-to-chassis hardware, again, typically with pan head Phillips screws.

MS4640A Series VNAs	The VectorStar VNA series currently includes the MS4642A, MS4644A, MS4645A, and the MS4647A. If procedure or part reference made is to MS4640A, the procedure or part is applicable to all VectorStar VNA models.
MS4642A VNA	10 MHz to 20 GHz VNA with K connectors. See Model Number.
MS4644A VNA	10 MHz to 40 GHz VNA with K connectors. See Model Number.
MS4645A VNA	10 MHz to 50 GHz VNA with V connectors. See Model Number.
MS4647A VNA	10 MHz to 70 GHz VNA with V connectors. See Model Number.
N · m	SI torque units measured in Newton-meters.
NI	National Instruments. Typically refers to GPIB controller software and network interface cards used in a PC-based GPIB controller. NI is a trademark of National Instruments Corporation.
NIST	National Institute of Standards and Technology, U.S. Department of Commerce.
NLTL	Non-Linear Transmission Line
No “A”	There is no engineering reference number for this part. For example, the Rear Panel Fan Assembly is identified as ND70074 – 62095-2 – No “A”. By comparison, the Rear Panel PCB Assembly is ND70067 – 62086 – A17.
No ND	There is no “ND” part number for this part and the Anritsu Part Number is used instead. Many replacement parts have ND part numbers such as the replacement SATA Hard Drive – ND70071. Some replacement parts only have Anritsu Part Numbers such as the MS4642A / MS4644A Test Port Connector – No ND – 34YK50C.
Option 051	Direct Front Panel Access Loops. The instrument has front panel loops installed on the front of the RF Deck. The loops make accessible the Port 1 b1, Port 1 a1, Port 1 Source, Port 2 Source, Port 2 a2, and Port 2 b2 lines.
Option 061	Direct Front Panel Access Loops and Two Attenuators. The instrument has front panel loops installed on the front of the RF Deck the same as for Option 051 above. The instrument is equipped with two Low Band Step Attenuators located on the RF Deck Top Side. The attenuator 3-2000-1502 part number is the same for all models. The A125 attenuator is installed on Port 1 Source (ND70085) and the A127 Attenuator is installed on Port 2 Test (ND70087). The instrument is equipped with two High Band Step Attenuators located on the RF Deck Bottom Side where the part numbers vary depending on the instrument model and port: 66052 or 68570 for MS4642A / MS4644A, and 66050 for MS4645A / MS4647A. The A121 attenuator is installed on Port 1 Source and A123 attenuator on Port 2 b2 Test. The part number of the attenuators depend on the instrument model.

Option 062	Direct Front Panel Access Loops and Four Attenuators. The instrument has front panel loops installed on the front of the RF Deck the same as for Option 051 above. The instrument is equipped with four Low Band Step Attenuators located on the RF Deck Top Side. The attenuator 3-2000-1502 part number is the same for all models. The A124 attenuator is installed on Port 1 Test (ND70084), the A125 attenuator on Port 1 Source (ND70085), the A126 attenuator on Port 2 Source (ND70086), and the A127 attenuator on Port 2 Test (ND70087). The instrument is equipped with four High Band Step Attenuators located on the RF Deck Bottom Side where the part numbers vary depending on the instrument model and port: 66052 or 68570 for MS4642A / MS4644A, and 66050 for MS4645A / MS4647A. The A120 attenuator is installed on Port 1 b1 Test, A121 attenuator on Port 1 Source, A122 attenuator on Port 2 Source, and A123 attenuator on Port 2 b2 Test.
Option 080	Broadband/Millimeter Wave Option for MS4647A VNAs with Standard No Option.
Option 081	Broadband/Millimeter Wave Option for MS4647A VNAs equipped with Option 051, 061, or 062.
Option 080/081	General reference to the broadband/millimeter-wave option for MS4647A VNAs.
OS	Operating System
P1 b1	Port abbreviation for Port 1 Receiver b1. Depending on the equipped option, it may have an attenuator mounted on the RF Deck Bottom Side.
P1 Src	Port abbreviation for Port 1 Source. Depending on the equipped option, it may have an attenuator mounted on the RF Deck Bottom Side.
P2 a2	Port abbreviation for Port 2 Test a2
P2 b2	Port abbreviation for Port 2 Receiver b2. Depending on the equipped option, it may have an attenuator mounted on the RF Deck Bottom Side.
P2 Src	Port abbreviation for Port 2 Source. Depending on the equipped option, it may have an attenuator mounted on the RF Deck Bottom Side.
PCB	Printed Circuit Board
PCI	Peripheral Component Interface 32-bit Bus
Phase 1 VNAs	VNAs with S/N 1132241 and lower.
Phase 2 VNAs	VNAs with S/N 1133242 and higher.
PMC	PCI Mezzanine Card
Pn	Plug number “Pn” on the indicated location, typically on a PCB or panel.
PN	Anritsu Part Number. Replacement parts are identified by a variable combination of Anritsu part numbers and/or “ND” part numbers. Some parts are further identified by engineering “A” reference numbers.
Port Identification	The RF Deck Port Identification is from the point of view with the RF Deck upside down and the RF deck front panel facing the technician. The ports are identified always from left to right (with Option 051, 061, or 062) as: • Port 2 b2, Port 2 a2, Test Port 2, Port 2 Source • Port 1 Source, Test Port 1, Port 1 a1, Port 1 b2

Port Module Groups

A collection of RF Deck Bottom Side modules that are mechanically and electrically connected to provide input/output to the named port. The disassembly and access procedure for a port module group depends on several factors and in this manual are divided up into the following common procedures:

1. RF deck top-side modules. The RF Deck must be removed to service these modules.
2. RF deck bottom-side module groups that consist of only one (1) module. These and the following port module groups can be serviced while the RF Deck remains in the instrument chassis.
3. RF deck bottom-side modules that are members of a multi-module group but can be removed from the side of the group without disassembling the rest of the group members. These are called “Side Attached Modules.”
4. RF deck bottom-side modules that are members of a multi-module group that is NOT connected to the A108 HBTS/VITS. These groups must be disassembled module-by-module to access the to-be-replaced module.
5. RF deck bottom-side modules that are members of a multi-module group that IS CONNECTED to the A108 HBTS/VITS which is located on the RF Deck Bottom Side A18 RF Control PCB Assembly. To service these groups, the A108 HBTS/VITS must first be carefully removed by following the specific procedure steps listed in Section 12-9 “Remove A108 HBTS/VITS Module – ND70092 or ND70093” on page 12-16 in Chapter 12. Once the A108 has been removed, this type of module group must then be disassembled module-by-module to access the to-be-replaced module.

Prepare

Usually describes transferring hardware such as handles and/or cables between the old and new parts. In many cases, protective covers or films must also be removed. For some of the RF Deck modules such as the Attenuators, preparation involves exchanging mounting brackets where the left/right bracket orientation must be observed.

RCM

RF Coupler Module

Remove

Take a component or assembly out of the chassis, to either replace it or to provide access to a deeper dwelling or underlying part.

Replace

Install the replacement part. Often, this involves transferring harnesses, cables, and/or mounting brackets from the old to the new part. Always use the same screws and other mounting hardware in the same location. The mounting hardware varies with location and changing a screw length or thread can damage or strip the threads of the underlying component.

RF Connections

These are connections for the primary RF signal path, usually through a 3.5 mm, SMA, K, or V connector. Except for the test port adapters and test port couplers, all RF connectors are handled using a 5/16” torque end wrench set to 8 lbf · in (8 inch pounds). Where appropriate, the use of two (2) end wrenches is defined.

RF Deck

Radio Frequency Chassis Deck Assembly. Mounts below the Motherboard 2 PCB Assembly in the instrument chassis. The RF Deck components vary depending on the VNA model number (either MS4642A, MS4644A, or MS4645A / MS4647A) and the installed option (either Standard No Options, Option 051 Front Panel Loops, Option 061 Front Panel Loops and Two Attenuators, or Option 062 Front Panel Loops and Four Attenuators). The complete deck is not a replaceable part.

RF Deck In

The referenced component can be serviced while the RF Deck remains in the instrument chassis.

RF Deck Out

The RF Deck must be removed from the instrument chassis to service the referenced component.

RF PCB

A18 RF Control PCB Assembly – ND70068 – 61929-3.

RP	Rear Panel or rear of instrument.
RPN	Replacement Part Number. Usually an “ND” number such as ND70061 for the A3 Single Board Computer PCB Assembly. Some replacement parts do not have an “ND” number and are identified as “No ND” with their Anritsu Part Numbers. For example, the 40 GHz High Band Step Attenuators used on the MS4642A / MS4644A with Option 061 or 062 are identified as “No ND – 66052”.
RS-232C	Rear panel serial interface port.
S/N	Serial Number
Sampler/LO Distribution Module PCB Assembly	The assembly mounts on top front center of the RF Deck and consists of the following modules: – A111 LO Distribution Module Assembly – ND70081 – 66270 – A100 Sampler Module – ND70082 – 64180 – A101 Sampler Module – ND70082 – 64180 – A102 Sampler Module – ND70082 – 64180 – A103 Sampler Module – ND70082 – 64180 – A130 LO Coupler Module – ND70083 – 68848 The RF Deck must be removed to service this assembly.
SATA HDD	Serial ATA (Advanced Technology Attachment) Hard Disk Drive – ND70071 – 62091.
SBC	Phase 1 A3 Single Board Computer PCB Assembly – ND70061 – 3-2000-1525/3-59632 or Phase 2 Single Board Computer PCB Assembly – ND 73875 – 3-2000-1668
SDM	A113 Switched Doubler Module – ND70098 – 59772
Side-attached modules	Side-attached modules are located on the RF Deck Bottom Side. These are modules that are members of a multi-module port group that can be easily disconnected and either removed or placed out of the way to access other modules. The disassembly sequence is remove the bracket-to-chassis hardware, remove the RF connection between the side-attached module and the rest of the module group, and then either disconnect the remaining semi-rigid coaxial cables or push the module out of the way.
Signal/Power Connections	These are miscellaneous signal and power connections either as a multi-wire harness, one or more twisted pairs, or a ribbon cable. Not all replacement parts come with the appropriate cable or harness. In all cases where a soldered-on harness is used (for example, the RF Deck Top Side Low Band Attenuators) the harness is installed on the replacement part and no soldering is required. In general, if the harness/cable is removable, it must be moved from the old part to the new part.
SLODM	Source/LO Distribution Module
SMA connector	Subminiature Version A coaxial RF connector rated at 50 ohms impedance with frequencies from DC to 18 GHz.
SODIMM	Small Outline Dual In-line Memory Module
SQM	A114 Switched Quadrupler Module – ND70099 – 60-327
SRC	Semi-rigid coaxial cable.
SSD	Solid State Drive
Standard No Options	The basic VectorStar VNA with only two test ports on the front panel. No front panel loops nor attenuators are installed. For a comparison, see: Option 051, Option 061, Option 062.
SUG	Software User Guide documentation.
SW1, SW2	DIP Switch Number located on the rear of the A7 Graphics Adapter PCB Assembly – ND70064 – 3-2000-1517. Leave DIP switches in their factory as-shipped settings.

SW4, SW5, SW6, SW7	DIP Switch Number located on the rear of the A3 Single Board Computer PCB Assembly – ND70061 – 3-2000-1525/3-59632. Leave DIP switches in their factory as-shipped settings.
TDS	Technical Data Sheet documentation. Includes instrument performance, configuration, option, and accessory information. The TDS for the VectorStar MS4640A Series VNA is APN 11410-00432.
Test Port Adapter	The final test port connector allowing attachment of test port cables to the VNA. The adapters usually match the connector types for the rest of the instrument such as K adapters on K connector MS4642A / MS4644A VNAs. The adapters are replaceable in case of damage or to switch to another connector type.
Tighten	Typically using a screwdriver, nut drive, or common end wrench, tighten the hardware using a firm torque without resorting to force. If “tighten” is used, there are no torque specifications for the fastener. Tighten the screws in at least two passes, usually in a specified sequence, often from the center of an assembly to its outer edges. This is especially important when working with large panels such as the Rear Panel Assembly or the Rear Panel Sub-Plate.
TMDS	Transition Minimized Differential Signaling
Torque and Torque Settings	Use the appropriate torque wrench to tighten the connector to a specified value. In all cases, the recommended Anritsu tool (or equivalent) is specified. Throughout this manual, SI torque units are used as follows. • lbf · in – Torque measured in pound-force inch or in popular parlance, inch-pounds. • lbf · ft – Torque measured in pound-foot or in popular parlance, foot-pounds. • N · m – Torque measured in Newton-meters. In general, SMA, K, and V connectors are torqued to 8 lbf · in (8 inch-pounds) using a 5/16” Torque End Wrench – Anritsu 01-201 or equivalent. The front panel Test Port Adapters require a 1/2” torque end wrench set to 60 lbf · in (60 inch-pounds). The underlying Test Port Couplers are held onto the RF Deck Front Panel with a nut and thrust washer and require a 13/16” deep socket and a torque wrench set to 15 lbf · ft (15 foot-pounds). For a complete list of recommended tools, see Section 1-10 “Recommended Tools and Supplies” on page 1-10. For more information on SI units, refer to **NIST Guide for the Use of the International System of Units (SI), NIST Special Publication 811, 2008 Editio*n*** available at www.nist.gov.
TP 1	Port abbreviation for Test Port 1
TP 2	Port abbreviation for Test Port 2
TSHARC	Driver software and management interface for the VNA touch screen LCD panel. A trademark of Microchip Technology.
USB	Universal Serial Bus
USB Type A	Standard rectangular USB Type 2.0 port with 4-conductors. There are two ports located on the VectorStar Front Panel and two ports located on the Rear Panel.
V	Volts
V connector	Trademarked Anritsu Company. A 1.85 mm coaxial connector with a rated frequency range from DC to 70 GHz.
Variants	VNA hardware configuration combinations based on either the VNA model number, the installed option, or both.
VCO	Voltage Controlled Oscillator
Verif.	Verification

Verif. Kit	Verification Kit
VITS	V Integrated High Band Transfer Switch Module – A108 – ND70093 – 66619. The module is installed on MS4645A and MS4647A models. The A108 module installed on MS46742A / MS4644A VNAs is the A108 High Band Transfer Switch Module – ND70092 – 66221.
VNA	Vector Network Analyzer
VNA Model Number	See Model Number.
XGA/VGA	eXtended Graphics Array/Video Graphics Array
ZIF connector	Zero Insertion Force connectors. The connector holding the Front Panel Flex PCB cable is a ZIF connector. Lift the side tabs about 1 mm to release the connector.

Appendix G — Cabling Tables

G-1 Introduction

This chapter provides information about the VNA cables and their connections between major assemblies, PCBs, and modules. Cables are not provided as part of the replacement assembly and module kits but can be ordered from Anritsu Customer Service.

G-2 Identification

Most VectorStar VNA internal cables are identified with three labels providing the following information:

- The assembly and connector where they originate.
- The cable or harness Anritsu part number.
- The assembly and connector where they terminate.

G-3 Cable Cross Reference Tables

All three cross reference tables use the same data. The first table (Table G-2) lists cables by part number. The second table (Table G-3 on page G-9 below) lists cables by their origin (or "From") assembly. The third table (Table G-4 on page G-16 below) lists cables by their destination (or "To") assembly.

G-4 Notes to Cable Cross Reference Tables

The notes below apply to all cable-cross reference tables.

Table G-1. Notes to Cable Cross Reference Tables (1 of 2)

Note	Description
#1	Unless otherwise described, all origin and destination assemblies are standalone modules.
#2	Printed circuit board assemblies are identified as "PCBs".
#3	MB2: • Phase 1 Motherboard 2 PCB Assembly – ND70070 – 61923-3 • Phase 2 Motherboard 2 PCB Assembly – ND73878 – 3-72813-3
#4	The Front and Rear Panels are on the RF Deck.
#5	Analog modules are PCB-like assemblies that mount in the Analog PCB Bay and include the A11, A13, and A15 modules.
Phase	• All – Used on all VNAs regardless of Phase. • Phase 1 – Generally, VNAs with S/N 1132241 and lower. • Phase 2 – Generally, VNAs with S/N 1133242 and higher.
Models	• All – Used with all VectorStar VNA Model Numbers. • MS4642A – Used only on the MS4642A VNA, 10 MHz to 20 GHz VNA, K connectors. • MS4644A – Used only on the MS4644A VNA, 10 MHz to 40 GHz VNA, K connectors. • MS4642A/MS4644A – Used on both VNAs. • MS4645A – Used only on the MS4645A VNA, 10 MHz to 50 GHz VNA, V connectors • MS4647A – Used only on the MS4647A VNA, 10 MHz to 70 GHz VNA, V connectors. • MS4645A/MS4647A – Used on both VNAs.

Table G-1. Notes to Cable Cross Reference Tables (2 of 2)

Note	Description
Option	• Any – Standard No Options, Option 051, 061, or 062. • Standard No Options – Option 051, 061, or 062 is not installed. • 051 – Option 051 Front Panel Loops in installed. • 061 – Option 061 Front Panel Loops and Two Attenuators is installed. • 062 – Option 062 Front Panel Loops and Four Attenuator is installed. • 080 – Option 080 Broadband/Millimeter Wave for MS4647A with Standard No Options is installed. • 081 – Option 081 Broadband/Millimeter Wave for MS4647A with Option 051, 061, or 062 is installed.

G-5 VectorStar MS4640A VNA Cables by Part Number

This table sorts cables by Anritsu part number. See Table G-1, “Notes to Cable Cross Reference Tables” on page G-1 above for note definitions.

Table G-2. VectorStar Internal Cables - Sorted by Part Number (1 of 6)

PN	Origin	Dest	Description	Link Between	Models	Options
3-803-104	A111	A18 PCB P5	A111 Control/Bias Cable	LO Module to A18 RF Control PCB P5	All	Any
3-803-104	A113	A18 PCB P6	A113 Control/Bias Cable	5-20 GHz Doubler Module to A18 RF Control PCB P6	All	Any
3-803-105	A115	A18 PCB P1	A115 Control/Bias Cable	Low Band Transfer Switch to A18 RF Control PCB P1	All	Any
3-806-175	A18 PCB P3	MB2 PCB P41	A18 P3 - MB2 P41, Interface Cable	A18 RF Control PCB to Motherboard 2 PCB	All	Any
3-806-184	A3 PCB	MB2 PCB P63	A3 USB - MB2 P63, USB cable	A3 Single Board Computer PCB to Motherboard 2 PCB	All	Any
3-806-185	A18 PCB P3	MB2 PCB P42	A18 J18 - MB2 P42, Ribbon Cable	A18 RF Control PCB to Motherboard 2 PCB	All	Any
3-803-103	A112	A18 PCB P4	A112 Control/Bias Cable	SDM to A18 RF Control PCB P4	MS4644A MS4645A MS4647A	Any
57989-3	A130 J1	A111 J2	A130 J1 - A111 J2, K male to male RF Cable	LO Coupler Module to LO Module	All	Any
62104-1	RF Deck Front Panel P1 SRC In (Note 4)	A128 J2	Front Port 1 Src In to A128 J2, K male to female RF Cable	RF Deck Front Panel Port 1 Src In to Port 1 Diplexer/Bias Tee	MS4642A MS4644A	Any
62104-4	RF Deck Front Panel P2 SRC In (Note 4)	A129 J2	Front Port 2 Src In to A129 J2, K male to female RF Cable	RF Deck Front Panel Port 2 Src In to Port 2 Diplexer/Bias Tee	MS4642A MS4644A	Any
62107-1	RF Deck Front Panel P1 SRC In (Note 4)	A128 J2	Front Port 1 Src In - A128 J2, V male to female RF Cable	RF Deck Front Panel Port 1 Src In to Port 1 Diplexer/Bias Tee Assembly	MS4645A MS4647A	Any
62107-2	A120 J2	A102 J1	A120 J2 - A100 J1, V male to female RF Cable	High Band Port 1 Test Step Attenuator to b1 Sampler Module	MS4645A MS4647A	062
62107-3	A123 J2	A102 J1	A123 J2 - A102 J1, V male to female RF Cable	High Band Test Step Attenuator to b2 Sampler Module	MS4645A MS4647A	061 062
62107-4	RF Deck Front Panel P2 SRC In (Note 4)	A129 J2	Front Port 2 Src In - A129 J2, V male to female RF Cable	RF Deck Front Panel Port 2 Src In to Port 2 Diplexer/Bias Tee Assembly	MS4645A MS4647A	Any
62109-20	RF Deck Front Panel b2 In (Note 4)	A102 J1	Front b2 In - A102 J1, V male to male RF Cable	RF Deck Front Panel b2 In to b2 Sampler Module	MS4645A MS4647A	051
62109-2	A104 J2	A100 J1	A104 J2 - A100 J1, V male to male RF Cable	Port 1 High Band Test Coupler to b1 Sampler Module	MS4645A MS4647A	Standard No Options
62109-3	A106 J2	A102 J1	A106 J2 - A102 J1, V male to male RF Cable	Port 2 High Band Test Coupler to b2 Sampler Module	MS4645A MS4647A	Standard No Options

Table G-2. VectorStar Internal Cables - Sorted by Part Number (2 of 6)

PN	Origin	Dest	Description	Link Between	Models	Options
62109-4	A108 J4	A105 J1	A108 J4 - A105 J1, V male to male RF Cable	High Band Transfer Switch to Port 1 High Band Reference Coupler	MS4645A MS4647A	Standard No Options
62109-5	RF Deck Front Panel b1 In (Note 4)	A100 J1	Front b1 In - A100 J1, V male to male RF Cable	RF Deck Front Panel b1 In to b1 Sampler Module	MS4645A MS4647A	051 061
62109-6	RF Deck Front Panel a1 In (Note 4)	A101 J1	Front a1 In - A101 J1, V male to male RF Cable	RF Deck Front Panel a1 In to a1 Sampler Module	MS4645A MS4647A	Any
62109-7	RF Deck Front Panel a2 In (Note 4)	A103 J1	Front a2 In - A103 J1, V male to male RF Cable	RF Deck Front Panel a2 In to a2 Sampler Module	MS4645A MS4647A	Any
62109-8	A107 J3	RF Deck Front Panel P2 SRC Out (Note 4)	A107 J3 - Front Port 2 Src Out, V male to male RF Cable	Port 2 High Band Reference Coupler to RF Deck Front Panel Port 2 Src Out	MS4645A MS4647A	051 061
62109-9	A108 J3	A107 J1	A108 J3 - A107 J1, V male to male RF Cable	High Band Transfer Switch to Port 2 High Band Reference Coupler	MS4645A MS4647A	Standard No Options
62109-10	A106 J2	RF Deck Front Panel b2 Out (Note 4)	A06 J2 - Front b2 Out, V male to male RF Cable	Port 2 High Band Test Coupler to RF Deck Front Panel b2 Out	MS4645A MS4647A	Any
62109-12	A108 J3	A107 J2	A108 J3 - A107 J2, V male to male RF Cable	High Band Transfer Switch to Port 2 High Band Reference Coupler	MS4645A MS4647A	051 061 062
62109-13	A108 J4	A105 J1	A108 J4 - A105 J1, V male to male RF Cable	High Band Transfer Switch to Port 1 High Band Reference Coupler	MS4645A MS4647A	051 061 062
62109-14	A104 J2	RF Deck Front Panel b1 Out (Note 4)	A104 J2 - Front b1 Out, V male to male RF Cable	Port 1 High Band Test Coupler to RF Deck Front Panel b1 Out	MS4645A MS4647A	Any
62109-15	A110 J2	A103 J1	A110 J2 - A103 J1, V male to male RF Cable	Port 2 Level Detector to a2 Sampler Module	MS4645A MS4647A	Standard No Options
62109-16	A109 J2	A101 J1	A109 J2 - A101 J1, V male to male RF Cable	Port 1 Level Detector to a1 Sampler Module	MS4645A MS4647A	Standard No Options
62109-17	A109 J2	RF Deck Front Panel a1 Out (Note 4)	A109 J2 - Front a1 Out, V male to male RF Cable	Port 1 Detector to RF Deck Front Panel a1 Out	MS4645A MS4647A	Any
62109-18	A110 J2	RF Deck Front Panel A2 Out (Note 4)	A110 J2 - Front a2 Out, V male to male RF Cable	Port 2 Detector to RF Deck Front Panel a2 Out	MS4645A MS4647A	Any
62109-19	A105 J3	RF Deck Front Panel P1 SRC Out (Note 4)	A105 J3 - Front Port 1 Src Out, V male to male RF Cable	Port 1 High Band Reference Coupler to RF Deck Front Panel Port 1 Src Out	MS4645A MS4647A	051

Table G-2. VectorStar Internal Cables - Sorted by Part Number (3 of 6)

PN	Origin	Dest	Description	Link Between	Models	Options
62111-2	A103 J2	A111 J5	A103 J2 - A111 J5, V male to K male RF Cable	a2 Sampler Module to LO Module	All	Any
62111-3	A104 J2	A100 J1	A104 J2 - A100 J1, K male to V male RF Cable	Port 1 Test Coupler to b1 Sampler Module	MS4642A MS4644A	Standard No Options
62111-4	A112 J2	A108 J2	A112 J2 - A108 J2, K male to V male RF Cable	SDM to High Band Transfer Switch	MS4645A MS4647A	Any
62111-5	A106 J2	A102 J1	A106 J2 - A102 J1, K male to V male RF Cable	Port 2 Test Coupler to b2 Sampler Module	MS4642A MS4644A	Standard No Options
62111-6	A109 J2	A101 J1	A109 J2 - A101 J1, K male to V male RF Cable	Port 1 Level Detector to a1 Sampler Module	MS4642A MS4644A	Standard No Options
62111-7	A110 J2	A103 J1	A110 J2 - A103 J1, K male to V male RF Cable	Port 2 Level Detector to a2 Sampler Module	MS4642A MS4644A	Standard No Options
62111-8	A101 J2	A111 J3	A101 J2 - A111 J3, V male to K male RF Cable	a1 Sampler Module to LO Module	All	Any
62111-10	RF Deck Front Panel b1 In (Note 4)	A100 J1	Front b1 In - A100 J1, K male to V male RF Cable	RF Deck Front Panel b1 In to b1 Sampler Module	MS4642A MS4644A	051 061
62111-11	RF Deck Front Panel a1 In (Note 4)	A101 J1	Front a1 In - A101 J1, K male to V male RF Cable	RF Deck Front Panel a1 In to a1 Sampler Module	MS4642A MS4644A	Any
62111-12	RF Deck Front Panel a2 In (Note 4)	A103 J1	Front a2 In - A103 J1, K male to V male RF Cable	RF Deck Front Panel a2 In to a2 Sampler Module	MS4642A MS4644A	Any
62111-13	RF Deck Front Panel b2 In (Note 4)	A102 J1	Front b2 In - A102 J1, K male to V male RF Cable	RF Deck Front Panel b2 In to b2 Sampler Module	MS4642A MS4644A	051
62111-9	A102 J2	A111 J4	A102 J2 - A111 J3, V male to K male RF Cable	b2 Sampler Module to LO Module	All	Any
62112-2	RF Deck Rear Panel P1 SRC In (Note 4)	A118 J2	Rear Port 1 Src In - A118 J2, SMA male to male RF Cable	Rear Panel Port 1 Src In to Port 1 Low Band Test Bridge	All	Any
62112-3	A113 J2	A114 J1	A113 J2 - A114 J1, SMA male to male RF Cable	5-20 GHz Doubler Module to SQM	MS4645A MS4647A	Any
62112-4	A116 J3	RF Deck Rear Panel a1 Out (Note 4)	A116 J3 - Rear a1 Out, SMA male to male RF Cable	Port 1 Low Band Reference Bridge to Rear Panel a1 Out	All	Any
62112-5	A116 J2	A125 J1	A116 J2 - A125 J1, SMA male to male RF Cable	Port 1 Low Band Reference Bridge to Port 1 Low Band Source Step Attenuator	All	061 062
62112-6	RF Deck Rear Panel P2 SRC In (Note 4)	A119 J2	Rear Port 2 Src In - A119 J2, SMA male to male RF Cable	Rear Panel Port 2 Src In to Port 2 Low Band Test Bridge	All	Any

Table G-2. VectorStar Internal Cables - Sorted by Part Number (4 of 6)

PN	Origin	Dest	Description	Link Between	Models	Options
62112-7	A117 J3	RF Deck Rear Panel a2 Out (Note 4)	A117 J3 - Rear a2 Out, SMA male to male RF Cable	Port 2 Low Band Reference Bridge to Rear Panel a2 Out	All	Any
62112-8	A126 J2	RF Deck Rear Panel P2 SRC Out (Note 4)	A126 J2 - Rear Port 2 Src Out, SMA male to male RF Cable	Port 2 Low Band Source Step Attenuator to Rear Panel Port 2 Src Out	All	062
62112-9	RF Deck Rear Panel b2 In (Note 4)	A127 J1	Rear b2 In - Port 2 Test Step Attenuator, SMA male to male RF Cable	Rear Panel b2 In to Port 2 Low Band Test Step Attenuator	All	061 062
62112-10	RF Deck Rear Panel b1 In (Note 4)	A124 J1	Rear b1 In - A124 J1, SMA male to male RF Cable	Rear Panel b1 In to Port 1 Low Band Test Step Attenuator	All	062
62112-11	A117 J2	A126 J1	A117 J2 - A126 J1, SMA male to male RF Cable	Port 2 Low Band Reference Bridge to Port 2 Low Band Source Step Attenuator	All	062
62112-12	A125 J2	RF Deck Rear Panel P1 SRC Out (Note 4)	A125 J2 - Rear Port 1 Src Out, SMA male to male RF Cable	Port 1 Low Band Source 1 Step Attenuator to Rear Panel Port 1 Src Out	All	061 062
62112-13	A114 J2	A112 J1	A114 J2 - A112 J1, SMA male to male RF Cable	SQM to SDM	MS4645A MS4647A	Any
62112-14	A113 J2	A108 J1	A113 J2 - A108 J1, SMA male to male RF Cable	5-20 GHz Doubler Module to High Band Transfer Switch	MS4642A	Any
62112-16	A13 J8 (Note 5)	A115 J1	A13 J8 - A115 J1, SMA male to male RF Cable	A13 RF Source Module to Low Band Transfer Switch	All	Any
62112-19	A13 J4 (Note 5)	A113 J1	A13 J4 - A113 J1, SMA male to male RF Cable	A13 RF Source Module to 5-20 GHz Doubler Module	All	Any
62112-20	A116 J2	A118 J2	A116 J2 - A118 J2, SMA male to male RF Cable	Port 1 Low Band Reference Bridge to Port 1 Low Band Test Bridge	All	Standard No Options
62112-21	A117 J2	A119 J2	A117 J2 - A119 J2, SMA male to male RF Cable	Port 2 Low Band Reference Bridge to Port 2 Low Band Test Bridge	All	Standard No Options
62112-22	A113 J2	A112 J1	A113 J2 - A112 J1, SMA male to male RF Cable	5-20 GHz Doubler Module to SDM	MS4644A	Any
62112-23	A124 J2	A15 J6 (Note 5)	A124 J2 - A15 J6, SMA male to male RF Cable	Port 1 Low Band Test Step Attenuator to Low Band Receiver Module	All	062
62112-24	RF Deck Rear Panel a1 In (Note 4)	A15 J3	Rear a1 In - A15 J3, SMA male to male RF Cable	Rear Panel a1 In to Low Band Receiver Module	All	Any
62112-25	RF Deck Rear Panel a2 In (Note 4)	A15 J5	Rear a2 In - A15 J5, SMA male to male RF Cable	Rear Panel a2 In to Low Band Receiver Module	All	Any
62112-26	A127 J2	A15 J7	A127 J2 - A15 J7, SMA male to male RF Cable	Port 2 Low Band Test Step Attenuator to Low Band Receiver Module	All	061 062

Table G-2. VectorStar Internal Cables - Sorted by Part Number (5 of 6)

PN	Origin	Dest	Description	Link Between	Models	Options
62112-27	A116 J3	A15 J3 (Note 5)	A116 J3 - A15 J3, SMA male to male RF Cable	Port 1 Low Band Reference Bridge to Low Band Receiver Module	All	Standard No Options
62112-28	A117 J3	A15 J5 (Note 5)	A117 J3 - A15 J5, SMA male to male RF Cable	Port 2 Low Band Reference Bridge to Low Band Receiver Module	All	Standard No Options
62112-29	A118 J3	A15 J6 (Note 5)	A118 J3 - A15 J6, SMA male to male RF Cable	Port 1 Low Band Test Bridge to Low Band Receiver Module	All	Standard No Options
62112-30	A119 J3	A15 J7 (Note 5)	A119 J3 - A15 J7, SMA male to male RF Cable	Port 2 Low Band Test Bridge to Low Band Receiver Module	All	Standard No Options
62112-31	A119 J3	RF Deck Rear Panel b2 Out	A119 J3 - Rear b2 Out, SMA male to male RF Cable	Port 2 Low Band Test Bridge to Rear Panel b2 Out	All	Any
62112-32	A118 J3	RF Deck Rear Panel b1 Out (Note 4)	A118 J3 - Rear b1 Out, SMA male to male RF Cable	Port 1 Low Band Test Bridge to Rear Panel b1 Out	All	Any
62112-33	RF Deck Rear Panel b1 In (Note 4)	A15 Module J6	Rear b1 In - A15 J6, SMA male to male RF Cable	Rear Panel b1 In to Low Band Receiver Module	All	051 061
62112-34	A117 J2	RF Deck Rear Panel P2 SRC Out (Note 4)	A117 J2 - Rear Port 2 Src Out, SMA male to male RF Cable	Port 2 Low Band Reference Bridge to Rear Panel Port 2 Src Out	All	051 061
62112-35	RF Deck Rear Panel b2 In (Note 4)	A15 J7	Rear b2 In - A15 J7, SMA male to male RF Cable	Rear Panel b2 In to Low Band Receiver Module	All	051
62112-36	A116 J2	RF Deck Rear Panel P1 SRC Out (Note 4)	A116 J2 - Rear Port 1 Src Out, SMA male to male RF Cable	Port 1 Low Band Reference Bridge to Rear Panel Port 1 Src Out	All	051
62112-37	A13 J6 (Note 5)	A15 J11 (Note 5)	A13 J6 - A15 J11, SMA male to male RF Cable	A13 RF Source Module to Low Band Receiver Module	All	Any
67354-1	A102 J3	A11 J21 (Note 5)	A102 J3 - A11 J21, SMA male to MCX male Cable	b2 Sampler Module to IF Band Module	All	Any
67354-2	A103 J3	A11 J18 (Note 5)	A103 J3 - A11 J18, SMA male to MCX male Cable	a2 Sampler Module to IF Band Module	All	Any
67354-3	A100 J3	A11 J15 (Note 5)	A100 J3 - A11 J15, SMA male to MCX male Cable	b1 Sampler Module to IF Band Module	All	Any
67354-4	A101 J3	A11 J12 (Note 5)	A101 J3 - A11 J12, SMA male to MCX male Cable	a1 Sampler Module to IF Band Module	All	Any
67357-1	A112 J2	A108 J1	A112 J2 - A108 J1, K male to male RF Cable	SDM to High Band Transfer Switch	MS4644A	Any
67357-2	A108 J3	A105 J1	A108 J3 - A105 J1, K male to male RF Cable	High Band Transfer Switch to Port 1 Reference Coupler	MS4642A MS4644A	Standard No Options
67357-3	A108 J2	A107 J1	A108 J2 - A107 J1, K male to male RF Cable	High Band Transfer Switch to Port 2 Reference Coupler	MS4642A MS4644A	Standard No Options

Table G-2. VectorStar Internal Cables - Sorted by Part Number (6 of 6)

PN	Origin	Dest	Description	Link Between	Models	Options
67357-4	A108 J3	A105 J1	A108 J3 - A105 J1, K male to male RF Cable	High Band Transfer Switch to Port 1 Reference Coupler	MS4642A MS4644A	051 061 062
67357-5	A108 J2	A107 J1	A108 J2 - A107 J1, K male to male RF Cable	High Band Transfer Switch to Port 2 Reference Coupler	MS4642A MS4644A	051 061 062
67357-7	A109 J2	RF Deck Front Panel a1 Out (Note 4)	A109 J2 - Front a1 Out, K male to male RF Cable	Port 1 Level Detector to RF Deck Front Panel a1 Out	MS4642A MS4644A	Any
67357-8	A110 J2	RF Deck Front Panel a2 Out (Note 4)	A110 J2 - Front a2 Out, K male to male RF Cable	Port 2 Level Detector to RF Deck Front Panel a2 Out	MS4642A MS4644A	Any
67357-9	A104 J2	RF Deck Front Panel b1 Out (Note 4)	A104 J2 - Front b1 Out, K male to male RF Cable	Port 1 Test Coupler to RF Deck Front Panel b1 Out	MS4642A MS4644A	051 061 062
67357-10	A106 J2	RF Deck Front Panel b2 Out (Note 4)	A106 J2 - Front b2 Out, K male to male RF Cable	Port 2 Test Coupler to RF Deck Front Panel b2 Out	MS4642A MS4644A	051 061 062
67357-11	A105 J3	RF Deck Front Panel P1 SRC Out (Note 4)	A105 J3 - Front Port 1 Src Out, K male to male RF Cable	High Band Reference Coupler to RF Deck Front Panel Port 1 Src Out	MS4642A MS4644A	051
67357-12	A107 J3	RF Deck Front Panel P2 SRC Out (Note 4)	A107 J3 - Front Port 2 Src Out, K male to male RF Cable	Port 2 High Band Reference Coupler to RF Deck Front Panel Port 2 Src Out	MS4642A MS4644A	Any
ND71746	A13 J12 (Note 5)	A18 PCB J7	A13 J12 - A18 J7, MCX male to MCX male Cable	A13 RF Source Module to A18 RF Control PCB	All	Any
ND71747	A13 J15 (Note 5)	A18 PCB J12	A13 J15 - A18 J12, MCX male to MCX male Cable	A13 RF Source Module to A18 RF Control PCB	MS4645A MS4647A	Any
ND71748	A13 J10 (Note 5)	A11 J5 (Note 5)	A13 J10 - A11 J5, MCX male to MCX male Cable	A13 RF Source Module to A11 IF Band Module	All	Any
ND71749	A15 J13 (Note 5)	A11 J11 (Note 5)	A15 J13 - A11 J11, MCX male to MCX male Cable	A15 Low Band Receiver Module to A11 IF Band Module	All	Any
ND71750	A15 J16 (Note 5)	A11 J14 (Note 5)	A15 J16 - A11 J14, MCX male to MCX male Cable	A15 Low Band Receiver Module to A11 IF Band Module	All	Any
ND71751	A15 J20 (Note 5)	A11 J17 (Note 5)	A15 J20 - A11 J17, MCX male to MCX male Cable	A15 Low Band Receiver Module to A11 IF Band Module	All	Any
ND71752	A15 J22 (Note 5)	A11 J20 (Note 5)	A15 J22 - A11 J20, MCX male to MCX male Cable	A15 Low Band Receiver Module to A13 IF Band Module	All	Any

G-6 VectorStar MS4640A VNA Cables by Origin

This cross reference table is sorted by the origin (or "from") assembly or module. See Table G-1, "Notes to Cable Cross Reference Tables" on page G-1 above for note definitions.

Table G-3. VectorStar Internal Cables - Sorted by Origin, Destination, and Part Number (1 of 7)

Origin	Dest	PN	Description	Link Between	Models	Options	Orig Seq
A3 PCB	MB2 PCB P63	3-806-184	A3 USB - MB2 P63, USB cable	A3 Single Board Computer PCB to Motherboard 2 PCB	All	Any	A003-000
A13 J4 (Note 5)	A113 J1	62112-19	A13 J4 - A113 J1, SMA male to male RF Cable	A13 RF Source Module to 5-20 GHz Doubler Module	All	Any	A013-J04
A13 J6 (Note 5)	A15 J11 (Note 5)	62112-37	A13 J6 - A15 J11, SMA male to male RF Cable	RF Source Module to Low Band Receiver Module	All	Any	A013-J06
A111 J4	A102 J2	62111-9	A102 J2 - A111 J3, V male to K male RF Cable	b2 Sampler Module to LO Module	All	Any	621119
A13 J8 (Note 5)	A115 J1	62112-16	A13 J8 - A115 J1, SMA male to male RF Cable	A13 RF Source Module to Low Band Transfer Switch	All	Any	A013-J08
A13 J10 (Note 5)	A11 J5 (Note 5)	ND71748	A13 J10 - A11 J5, MCX male to MCX male Cable	A13 RF Source Module to A11 IF Band Module	All	Any	A013-J10
A13 J12 (Note 5)	A18 PCB J7	ND71746	A13 J12 - A18 J7, MCX male to MCX male Cable	A13 RF Source Module to A18 RF Control PCB	All	Any	A013-J12
A13 J15 (Note 5)	A18 PCB J12	ND71747	A13 J15 - A18 J12, MCX male to MCX male Cable	A13 RF Source Module to A18 RF Control PCB	MS4645A MS4647A	Any	A013-J15
A15 J13 (Note 5)	A11 J11 (Note 5)	ND71749	A15 J13 - A11 J11, MCX male to MCX male Cable	A15 Low Band Receiver Module to A11 IF Band Module	All	Any	A015-J13
A15 J16 (Note 5)	A11 J14 (Note 5)	ND71750	A15 J16 - A11 J14, MCX male to MCX male Cable	A15 Low Band Receiver Module to A11 IF Band Module	All	Any	A015-J16
A15 J20 (Note 5)	A11 J17 (Note 5)	ND71751	A15 J20 - A11 J17, MCX male to MCX male Cable	A15 Low Band Receiver Module to A11 IF Band Module	All	Any	A015-J20
A15 J22 (Note 5)	A11 J20 (Note 5)	ND71752	A15 J22 - A11 J20, MCX male to MCX male Cable	A15 Low Band Receiver Module to A13 IF Band Module	All	Any	A015-J22
A18 PCB P3	MB2 PCB P41	3-806-175	A18 P3 - MB2 P41, Interface Cable	A18 RF Control PCB to Motherboard 2 PCB	All	Any	A018-P03
A18 PCB P3	MB2 PCB P42	3-806-185	A18 J18 - MB2 P42, Ribbon Cable	A18 RF Control PCB to Motherboard 2 PCB	All	Any	A018-P03
A100 J3	A11 J15 (Note 5)	67354-3	A100 J3 - A11 J15, SMA male to MCX male Cable	b1 Sampler Module to IF Band Module	All	Any	A100-J03
A101 J2	A111 J3	62111-8	A101 J2 - A111 J3, V male to K male RF Cable	a1 Sampler Module to LO Module	All	Any	A101-J02
A101 J3	A11 J12 (Note 5)	67354-4	A101 J3 - A11 J12, SMA male to MCX male Cable	a1 Sampler Module to IF Band Module	All	Any	A101-J03
A102 J3	A11 J21 (Note 5)	67354-1	A102 J3 - A11 J21, SMA male to MCX male Cable	b2 Sampler Module to IF Band Module	All	Any	A102-J03
A103 J2	A111 J5	62111-2	A103 J2 - A111 J5, V male to K male RF Cable	a2 Sampler Module to LO Module	All	Any	A103-J02
A103 J3	A11 J18 (Note 5)	67354-2	A103 J3 - A11 J18, SMA male to MCX male Cable	a2 Sampler Module to IF Band Module	All	Any	A103-J03

Table G-3. VectorStar Internal Cables - Sorted by Origin, Destination, and Part Number (2 of 7)

Origin	Dest	PN	Description	Link Between	Models	Options	Orig Seq
A104 J2	A100 J1	62109-2	A104 J2 - A100 J1, V male to male RF Cable	Port 1 High Band Test Coupler to b1 Sampler Module	MS4645A MS4647A	Standard No Options	A104-J02
A104 J2	A100 J1	62111-3	A104 J2 - A100 J1, K male to V male RF Cable	Port 1 Test Coupler to b1 Sampler Module	MS4642A MS4644A	Standard No Options	A104-J02
A104 J2	RF Deck Front Panel b1 Out (Note 4)	62109-14	A104 J2 - Front b1 Out, V male to male RF Cable	Port 1 High Band Test Coupler to RF Deck Front Panel b1 Out	MS4645A MS4647A	Any	A104-J02
A104 J2	RF Deck Front Panel b1 Out (Note 4)	67357-9	A104 J2 - Front b1 Out, K male to male RF Cable	Port 1 Test Coupler to RF Deck Front Panel b1 Out	MS4642A MS4644A	051 061 062	A104-J02
A105 J3	RF Deck Front Panel P1 SRC Out (Note 4)	62109-19	A105 J3 - Front Port 1 Src Out, V male to male RF Cable	Port 1 High Band Reference Coupler to RF Deck Front Panel Port 1 Src Out	MS4645A MS4647A	051	A105-J03
A105 J3	RF Deck Front Panel P1 SRC Out (Note 4)	67357-11	A105 J3 - Front Port 1 Src Out, K male to male RF Cable	High Band Reference Coupler to RF Deck Front Panel Port 1 Src Out	MS4642A MS4644A	051	A105-J03
A106 J2	A102 J1	62109-3	A106 J2 - A102 J1, V male to male RF Cable	Port 2 High Band Test Coupler to b2 Sampler Module	MS4645A MS4647A	Standard No Options	A106-J02
A106 J2	A102 J1	62111-5	A106 J2 - A102 J1, K male to V male RF Cable	Port 2 Test Coupler to b2 Sampler Module	MS4642A MS4644A	Standard No Options	A106-J02
A106 J2	RF Deck Front Panel b2 Out (Note 4)	62109-10	A106 J2 - Front b2 Out, V male to male RF Cable	Port 2 High Band Test Coupler to RF Deck Front Panel b2 Out	MS4645A MS4647A	Any	A106-J02
A106 J2	RF Deck Front Panel b2 Out (Note 4)	67357-10	A106 J2 - Front b2 Out, K male to male RF Cable	Port 2 Test Coupler to RF Deck Front Panel b2 Out	MS4642A MS4644A	051 061 062	A106-J02
A107 J3	RF Deck Front Panel P2 SRC Out (Note 4)	67357-12	A107 J3 - Front Port 2 Src Out, K male to male RF Cable	Port 2 High Band Reference Coupler to RF Deck Front Panel Port 2 Src Out	MS4642A MS4644A	051 061	A107-J03
A107 J3	RF Deck Front Panel P2 SRC Out	62109-8	A107 J3 - Front Port 2 Src Out, V male to male RF Cable	Port 2 High Band Reference Coupler to RF Deck Front Panel Port 2 Src Out	MS4645A MS4647A	051 061	A107-J03
A108 J2	A107 J1	67357-5	A108 J2 - A107 J1, K male to male RF Cable	High Band Transfer Switch to Port 2 Reference Coupler	MS4642A MS4644A	051 061 062	A108-J02
A108 J2	A107 J1	67357-3	A108 J2 - A107 J1, K male to male RF Cable	High Band Transfer Switch to Port 2 Reference Coupler	MS4642A MS4644A	Standard No Options	A108-J02
A108 J3	A105 J1	67357-4	A108 J3 - A105 J1, K male to male RF Cable	High Band Transfer Switch to Port 1 Reference Coupler	MS4642A MS4644A	051 061 062	A108-J03

Table G-3. VectorStar Internal Cables - Sorted by Origin, Destination, and Part Number (3 of 7)

Origin	Dest	PN	Description	Link Between	Models	Options	Orig Seq
A108 J3	A105 J1	67357-2	A108 J3 - A105 J1, K male to male RF Cable	High Band Transfer Switch to Port 1 Reference Coupler	MS4642A MS4644A	Standard No Options	A108-J03
A108 J3	A107 J1	62109-9	A108 J3 - A107 J1, V male to male RF Cable	High Band Transfer Switch to Port 2 High Band Reference Coupler	MS4645A MS4647A	Standard No Options	A108-J03
A108 J3	A107 J2	62109-12	A108 J3 - A107 J2, V male to male RF Cable	High Band Transfer Switch to Port 2 High Band Reference Coupler	MS4645A MS4647A	051 061 062	A108-J03
A108 J4	A105 J1	62109-13	A108 J4 - A105 J1, V male to male RF Cable	High Band Transfer Switch to Port 1 High Band Reference Coupler	MS4645A MS4647A	051 061 062	A108-J04
A108 J4	A105 J1	62109-4	A108 J4 - A105 J1, V male to male RF Cable	High Band Transfer Switch to Port 1 High Band Reference Coupler	MS4645A MS4647A	Standard No Options	A108-J04
A109 J2	A101 J1	62109-16	A109 J2 - A101 J1, V male to male RF Cable	Port 1 Level Detector to a1 Sampler Module	MS4645A MS4647A	Standard No Options	A109-J02
A109 J2	A101 J1	62111-6	A109 J2 - A101 J1, K male to V male RF Cable	Port 1 Level Detector to a1 Sampler Module	MS4642A MS4644A	Standard No Options	A109-J02
A109 J2	RF Deck Front Panel a1 Out (Note 4)	62109-17	A109 J2 - Front a1 Out, V male to male RF Cable	Port 1 Detector to RF Deck Front Panel a1 Out	MS4645A MS4647A	Any	A109-J02
A109 J2	RF Deck Front Panel a1 Out (Note 4)	67357-7	A109 J2 - Front a1 Out, K male to male RF Cable	Port 1 Level Detector to RF Deck Front Panel a1 Out	MS4642A MS4644A	Any	A109-J02
A110 J2	A103 J1	62109-15	A110 J2 - A103 J1, V male to male RF Cable	Port 2 Level Detector to a2 Sampler Module	MS4645A MS4647A	Standard No Options	A110-J02
A110 J2	A103 J1	62111-7	A110 J2 - A103 J1, K male to V male RF Cable	Port 2 Level Detector to a2 Sampler Module	MS4642A MS4644A	Standard No Options	A110-J02
A110 J2	RF Deck Front Panel a2 Out	67357-8	A110 J2 - Front a2 Out, K male to male RF Cable	Port 2 Level Detector to RF Deck Front Panel a2 Out	MS4642A MS4644A	Any	A110-J02
A110 J2	RF Deck Front Panel A2 Out	62109-18	A110 J2 - Front a2 Out, V male to male RF Cable	Port 2 Detector to RF Deck Front Panel a2 Out	MS4645A MS4647A	Any	A110-J02
A111	A18 PCB P5	3-803-104	A111 Control/Bias Cable	LO Module to A18 RF Control PCB P5	All	Any	A111-000
A112	A18 PCB P4	3-803-103	A112 Control/Bias Cable	SDM to A18 RF Control PCB P4	MS4644A MS4645A MS4647A	Any	A112-000
A112 J2	A108 J1	67357-1	A112 J2 - A108 J1, K male to male RF Cable	SDM to High Band Transfer Switch	MS4644A	Any	A112-J02
A112 J2	A108 J2	62111-4	A112 J2 - A108 J2, K male to V male RF Cable	SDM to High Band Transfer Switch	MS4645A MS4647A	Any	A112-J02
A113	A18 PCB P6	3-803-104	A113 Control/Bias Cable	5-20 GHz Doubler Module to A18 RF Control PCB P6	All	Any	A113-000
A113 J1	A112 J1	62112-22	A113 J2 - A112 J1, SMA male to male RF Cable	5-20 GHz Doubler Module to SDM	MS4644A	Any	A113-J01

Table G-3. VectorStar Internal Cables - Sorted by Origin, Destination, and Part Number (4 of 7)

Origin	Dest	PN	Description	Link Between	Models	Options	Orig Seq
A113 J2	A108 J1	62112-14	A113 J2 - A108 J1, SMA male to male RF Cable	5-20 GHz Doubler Module to High Band Transfer Switch	MS4642A	Any	A113-J02
A113 J2	A114 J1	62112-3	A113 J2 - A114 J1, SMA male to male RF Cable	5-20 GHz Doubler Module to SQM	MS4645A MS4647A	Any	A113-J02
A114 J2	A112 J1	62112-13	A114 J2 - A112 J1, SMA male to male RF Cable	SQM to SDM	MS4645A MS4647A	Any	A114-J02
A115	A18 PCB P1	3-803-105	A115 Control/Bias Cable	Low Band Transfer Switch to A18 RF Control PCB P1	All	Any	A115-000
A116 J2	A118 J2	62112-20	A116 J2 - A118 J2, SMA male to male RF Cable	Port 1 Low Band Reference Bridge to Port 1 Low Band Test Bridge	All	Standard No Options	A115-J02
A116 J2	A125 J1	62112-5	A116 J2 - A125 J1, SMA male to male RF Cable	Port 1 Low Band Reference Bridge to Port 1 Low Band Source Step Attenuator	All	061 062	A116-J02
A116 J2	RF Deck Rear Panel P1 SRC Out (Note 4)	62112-36	A116 J2 - Rear Port 1 Src Out, SMA male to male RF Cable	Port 1 Low Band Reference Bridge to Rear Panel Port 1 Src Out	All	051	A116-J02
A116 J3	A15 J3 (Note 5)	62112-27	A116 J3 - A15 J3, SMA male to male RF Cable	Port 1 Low Band Reference Bridge to Low Band Receiver Module	All	Standard No Options	A116-J03
A116 J3	RF Deck Rear Panel a1 Out (Note 4)	62112-4	A116 J3 - Rear a1 Out, SMA male to male RF Cable	Port 1 Low Band Reference Bridge to Rear Panel a1 Out	All	Any	A116-J03
A117 J2	A119 J2	62112-21	A117 J2 - A119 J2, SMA male to male RF Cable	Port 2 Low Band Reference Bridge to Port 2 Low Band Test Bridge	All	Standard No Options	A117-J02
A117 J2	A126 J1	62112-11	A117 J2 - A126 J1, SMA male to male RF Cable	Port 2 Low Band Reference Bridge to Port 2 Low Band Source Step Attenuator	All	062	A117-J02
A117 J2	RF Deck Rear Panel P2 SRC Out (Note 4)	62112-34	A117 J2 - Rear Port 2 Src Out, SMA male to male RF Cable	Port 2 Low Band Reference Bridge to Rear Panel Port 2 Src Out	All	051 061	A117-J02
A117 J3	A15 J5 (Note 5)	62112-28	A117 J3 - A15 J5, SMA male to male RF Cable	Port 2 Low Band Reference Bridge to Low Band Receiver Module	All	Standard No Options	A117-J03
A117 J3	RF Deck Rear Panel a2 Out (Note 4)	62112-7	A117 J3 - Rear a2 Out, SMA male to male RF Cable	Port 2 Low Band Reference Bridge to Rear Panel a2 Out	All	Any	A117-J03
A118 J3	A15 J6 (Note 5)	62112-29	A118 J3 - A15 J6, SMA male to male RF Cable	Port 1 Low Band Test Bridge to Low Band Receiver Module	All	Standard No Options	A118-J03
A118 J3	RF Deck Rear Panel b1 Out (Note 4)	62112-32	A118 J3 - Rear b1 Out, SMA male to male RF Cable	Port 1 Low Band Test Bridge to Rear Panel b1 Out	All	Any	A118-J03

Table G-3. VectorStar Internal Cables - Sorted by Origin, Destination, and Part Number (5 of 7)

Origin	Dest	PN	Description	Link Between	Models	Options	Orig Seq
A119 J3	A15 J7 (Note 5)	62112-30	A119 J3 - A15 J7, SMA male to male RF Cable	Port 2 Low Band Test Bridge to Low Band Receiver Module	All	Standard No Options	A119-J03
A119 J3	RF Deck Rear Panel b2 Out (Note 4)	62112-31	A119 J3 - Rear b2 Out, SMA male to male RF Cable	Port 2 Low Band Test Bridge to Rear Panel b2 Out	All	Any	A119-J03
A120 J2	A100 J1	62107-2	A120 J2 - A100 J1, V male to female RF Cable	High Band Port 1 Test Step Attenuator to b1 Sampler Module	MS4645A MS4647A	062	A120-J02
A123 J2	A102 J1	62107-3	A123 J2 - A102 J1, V male to female RF Cable	High Band Test Step Attenuator to b2 Sampler Module	MS4645A MS4647A	061 062	A123-J02
A124 J2	A15 J6 (Note 5)	62112-23	A124 J2 - A15 J6, SMA male to male RF Cable	Port 1 Low Band Test Step Attenuator to Low Band Receiver Module	All	062	A124-J02
A125 J2	RF Deck Rear Panel P1 SRC Out (Note 4)	62112-12	A125 J2 - Rear Port 1 Src Out, SMA male to male RF Cable	Port 1 Low Band Source 1 Step Attenuator to Rear Panel Port 1 Src Out	All	061 062	A125-J02
A126 J2	RF Deck Rear Panel P2 SRC Out (Note 4)	62112-8	A126 J2 - Rear Port 2 Src Out, SMA male to male RF Cable	Port 2 Low Band Source Step Attenuator to Rear Panel Port 2 Src Out	All	062	A126-J02
A127 J2	A15 J7	62112-26	A127 J2 - A15 J7, SMA male to male RF Cable	Port 2 Low Band Test Step Attenuator to Low Band Receiver Module	All	061 062	A127-J02
A130 J1	A111 J2	57989-3	A130 J1 - A111 J2, K male to male RF Cable	LO Coupler Module to LO Module	All	Any	A130-J01
RF Deck Front Panel a1 In	A101 J1	62109-6	Front a1 In - A101 J1, V male to male RF Cable	RF Deck Front Panel a1 In to a1 Sampler Module	MS4645A MS4647A	Any	RFD-FP-A1
RF Deck Front Panel a1 In (Note 4)	A101 J1	62111-11	Front a1 In - A101 J1, K male to V male RF Cable	RF Deck Front Panel a1 In to a1 Sampler Module	MS4642A MS4644A	Any	RFD-FP-A1
RF Deck Rear Panel a1 In (Note 4)	A15 J3	62112-24	Rear a1 In - A15 J3, SMA male to male RF Cable	Rear Panel a1 In to Low Band Receiver Module	All	Any	RFD-FP-A1
RF Deck Front Panel a2 In (Note 4)	A103 J1	62109-7	Front a2 In - A103 J1, V male to male RF Cable	RF Deck Front Panel a2 In to a2 Sampler Module	MS4645A MS4647A	Any	RFD-FP-A2
RF Deck Front Panel a2 In (Note 4)	A103 J1	62111-12	Front a2 In - A103 J1, K male to V male RF Cable	RF Deck Front Panel a2 In to a2 Sampler Module	MS4642A MS4644A	Any	RFD-FP-A2
RF Deck Front Panel b1 In (Note 4)	A100 J1	62109-5	Front b1 In - A100 J1, V male to male RF Cable	RF Deck Front Panel b1 In to b1 Sampler Module	MS4645A MS4647A	051 061	RFD-FP-B1

Table G-3. VectorStar Internal Cables - Sorted by Origin, Destination, and Part Number (6 of 7)

Origin	Dest	PN	Description	Link Between	Models	Options	Orig Seq
RF Deck Front Panel b1 In (Note 4)	A100 J1	62111-10	Front b1 In - A100 J1, K male to V male RF Cable	RF Deck Front Panel b1 In to b1 Sampler Module	MS4642A MS4644A	051 061	RFD-FP-B1
RF Deck Front Panel b2 In (Note 4)	A102 J1	62109-20	Front b2 In - A102 J1, V male to male RF Cable	RF Deck Front Panel b2 In to b2 Sampler Module	MS4645A MS4647A	051	RFD-FP-B2
RF Deck Front Panel b2 In (Note 4)	A102 J1	62111-13	Front b2 In - A102 J1, K male to V male RF Cable	RF Deck Front Panel b2 In to b2 Sampler Module	MS4642A MS4644A	051	RFD-FP-B2
RF Deck Front Panel P1 SRC In (Note 4)	A128 J2	62104-1	Front Port 1 Src In to A128 J2, K male to female RF Cable	RF Deck Front Panel Port 1 Src In to Port 1 Diplexer/Bias Tee	MS4642A MS4644A	Any	RFD-FP-P1 S
RF Deck Front Panel P1 SRC In (Note 4)	A128 J2	62107-1	Front Port 1 Src In - A128 J2, V male to female RF Cable	RF Deck Front Panel Port 1 Src In to Port 1 Diplexer/Bias Tee Assembly	MS4645A MS4647A	Any	RFD-FP-P1 S
RF Deck Front Panel P2 SRC In (Note 4)	A129 J2	62104-4	Front Port 2 Src In to A129 J2, K male to female RF Cable	RF Deck Front Panel Port 2 Src In to Port 2 Diplexer/Bias Tee	MS4642A MS4644A	Any	RFD-FP-P2 S
RF Deck Front Panel P2 SRC In (Note 4)	A129 J2	62107-4	Front Port 2 Src In - A129 J2, V male to female RF Cable	RF Deck Front Panel Port 2 Src In to Port 2 Diplexer/Bias Tee Assembly	MS4645A MS4647A	Any	RFD-FP-P2 S
RF Deck Rear Panel a2 In (Note 4)	A15 J5	62112-25	Rear a2 In - A15 J5, SMA male to male RF Cable	Rear Panel a2 In to Low Band Receiver Module	All	Any	RFD-RP-A2
RF Deck Rear Panel b1 In (Note 4)	A124 J1	62112-10	Rear b1 In - A124 J1, SMA male to male RF Cable	Rear Panel b1 In to Port 1 Low Band Test Step Attenuator	All	062	RFD-RP-B1
RF Deck Rear Panel b1 In (Note 4)	A15 Module J6	62112-33	Rear b1 In - A15 J6, SMA male to male RF Cable	Rear Panel b1 In to Low Band Receiver Module	All	051 061	RFD-RP-B1
RF Deck Rear Panel b2 In (Note 4)	A127 J1	62112-9	Rear b2 In - Port 2 Test Step Attenuator, SMA male to male RF Cable	Rear Panel b2 In to Port 2 Low Band Test Step Attenuator	All	061 062	RFD-RP-B2
RF Deck Rear Panel b2 In (Note 4)	A15 J7	62112-35	Rear b2 In - A15 J7, SMA male to male RF Cable	Rear Panel b2 In to Low Band Receiver Module	All	051	RFD-RP-B2
RF Deck Rear Panel P1 SRC In (Note 4)	A118 J2	62112-2	Rear Port 1 Src In - A118 J2, SMA male to male RF Cable	Rear Panel Port 1 Src In to Port 1 Low Band Test Bridge	All	Any	RFD-RP-P1 S

Table G-3. VectorStar Internal Cables - Sorted by Origin, Destination, and Part Number (7 of 7)

Origin	Dest	PN	Description	Link Between	Models	Options	Orig Seq
RF Deck Rear Panel P2 SRC In (Note 4)	A119 J2	62112-6	Rear Port 2 Src In - A119 J2, SMA male to male RF Cable	Rear Panel Port 2 Src In to Port 2 Low Band Test Bridge	All	Any	RFD-RP-P2 S

G-7 VectorStar Cables by Destination

This cross reference table is sorted by the destination (or "to") assembly or module. See Table G-1, "Notes to Cable Cross Reference Tables" on page G-1 above for note definitions.

Table G-4. VectorStar Internal Cables - Sorted by Destination, Origin, and Part Number (1 of 6)

Dest	Origin	PN	Description	Link Between	Models	Options
A11 J5 (Note 5)	A13 J10 (Note 5)	ND71748	A13 J10 - A11 J5, MCX male to MCX male Cable	A13 RF Source Module to A11 IF Band Module	All	Any
A11 J11 (Note 5)	A15 J13 (Note 5)	ND71749	A15 J13 - A11 J11, MCX male to MCX male Cable	A15 Low Band Receiver Module to A11 IF Band Module	All	Any
A11 J12 (Note 5)	A101 J3	67354-4	A101 J3 - A11 J12, SMA male to MCX male Cable	a1 Sampler Module to IF Band Module	All	Any
A11 J14 (Note 5)	A15 J16 (Note 5)	ND71750	A15 J16 - A11 J14, MCX male to MCX male Cable	A15 Low Band Receiver Module to A11 IF Band Module	All	Any
A11 J15 (Note 5)	A100 J3	67354-3	A100 J3 - A11 J15, SMA male to MCX male Cable	b1 Sampler Module to IF Band Module	All	Any
A102 J2	A111 J4	62111-9	A102 J2 - A111 J3, V male to K male RF Cable	b2 Sampler Module to LO Module	All	Any
A11 J17 (Note 5)	A15 J20 (Note 5)	ND71751	A15 J20 - A11 J17, MCX male to MCX male Cable	A15 Low Band Receiver Module to A11 IF Band Module	All	Any
A11 J18 (Note 5)	A103 J3	67354-2	A103 J3 - A11 J18, SMA male to MCX male Cable	a2 Sampler Module to IF Band Module	All	Any
A11 J20 (Note 5)	A15 J22 (Note 5)	ND71752	A15 J22 - A11 J20, MCX male to MCX male Cable	A15 Low Band Receiver Module to A13 IF Band Module	All	Any
A11 J21 (Note 5)	A102 J3	67354-1	A102 J3 - A11 J21, SMA male to MCX male Cable	b2 Sampler Module to IF Band Module	All	Any
A15 J3 (Note 5)	A116 J3	62112-27	A116 J3 - A15 J3, SMA male to male RF Cable	Port 1 Low Band Reference Bridge to Low Band Receiver Module	All	Standard No Options
A15 J3 (Note 5)	RF Deck Rear Panel a1 In (Note 4)	62112-24	Rear a1 In - A15 J3, SMA male to male RF Cable	Rear Panel a1 In to Low Band Receiver Module	All	Any
A15 J5 (Note 5)	A117 J3	62112-28	A117 J3 - A15 J5, SMA male to male RF Cable	Port 2 Low Band Reference Bridge to Low Band Receiver Module	All	Standard No Options
A15 J5 (Note 5)	RF Deck Rear Panel a2 In (Note 4)	62112-25	Rear a2 In - A15 J5, SMA male to male RF Cable	Rear Panel a2 In to Low Band Receiver Module	All	Any
A15 J6 (Note 5)	A118 J3	62112-29	A118 J3 - A15 J6, SMA male to male RF Cable	Port 1 Low Band Test Bridge to Low Band Receiver Module	All	Standard No Options
A15 J6 (Note 5)	A124 J2	62112-23	A124 J2 - A15 J6, SMA male to male RF Cable	Port 1 Low Band Test Step Attenuator to Low Band Receiver Module	All	062
A15 J6 (Note 5)	RF Deck Rear Panel b1 In (Note 4)	62112-33	Rear b1 In - A15 J6, SMA male to male RF Cable	Rear Panel b1 In to Low Band Receiver Module	All	051 061
A15 J7 (Note 5)	A119 J3	62112-30	A119 J3 - A15 J7, SMA male to male RF Cable	Port 2 Low Band Test Bridge to Low Band Receiver Module	All	Standard No Options

Table G-4. VectorStar Internal Cables - Sorted by Destination, Origin, and Part Number (2 of 6)

Dest	Origin	PN	Description	Link Between	Models	Options
A15 J7 (Note 5)	A127 J2	62112-26	A127 J2 - A15 J7, SMA male to male RF Cable	Port 2 Low Band Test Step Attenuator to Low Band Receiver Module	All	061 062
A15 J7 (Note 5)	RF Deck Rear Panel b2 In (Note 4)	62112-35	Rear b2 In - A15 J7, SMA male to male RF Cable	Rear Panel b2 In to Low Band Receiver Module	All	051
A15 J11 (Note 5)	A13 J6 (Note 5)	6212-37	A13 J6 - A15 J11, SMA male to male RF Cable	A13 RF Source Module to Low Band Receiver Module	All	Any
A18 PCB J7	A13 J12 (Note 5)	ND71746	A13 J12 - A18 J7, MCX male to MCX male Cable	A13 RF Source Module to A18 RF Control PCB	All	Any
A18 PCB J12	A13 J15 (Note 5)	ND71747	A13 J15 - A18 J12, MCX male to MCX male Cable	A13 RF Source Module to A18 RF Control PCB	MS4645A MS4647A	Any
A18 PCB P1	A115	3-803-105	A115 Control/Bias Cable	Low Band Transfer Switch to A18 RF Control PCB P1	All	Any
A18 PCB P4	A112	3-803-103	A112 Control/Bias Cable	SDM to A18 RF Control PCB P4	MS4644A MS4645A MS4647A	Any
A18 PCB P5	A111	3-803-104	A111 Control/Bias Cable	LO Module to A18 RF Control PCB P5	All	Any
A18 PCB P6	A113	3-803-104	A113 Control/Bias Cable	5-20 GHz Doubler Module to A18 RF Control PCB P6	All	Any
A100 J1	A104 J2	62109-2	A104 J2 - A100 J1, V male to male RF Cable	Port 1 High Band Test Coupler to b1 Sampler Module	MS4645A MS4647A	Standard No Options
A100 J1	A104 J2	62111-3	A104 J2 - A100 J1, K male to V male RF Cable	Port 1 Test Coupler to b1 Sampler Module	MS4642A MS4644A	Standard No Options
A100 J1	RF Deck Front Panel b1 In (Note 4)	62109-5	Front b1 In - A100 J1, V male to male RF Cable	RF Deck Front Panel b1 In to b1 Sampler Module	MS4645A MS4647A	051 061
A100 J1	RF Deck Front Panel b1 In (Note 4)	62111-10	Front b1 In - A100 J1, K male to V male RF Cable	RF Deck Front Panel b1 In to b1 Sampler Module	MS4642A MS4644A	051 061
A101 J1	A109 J2	62109-16	A109 J2 - A101 J1, V male to male RF Cable	Port 1 Level Detector to a1 Sampler Module	MS4645A MS4647A	Standard No Options
A101 J1	A109 J2	62111-6	A109 J2 - A101 J1, K male to V male RF Cable	Port 1 Level Detector to a1 Sampler Module	MS4642A MS4644A	Standard No Options
A101 J1	RF Deck Front Panel a1 In (Note 4)	62109-6	Front a1 In - A101 J1, V male to male RF Cable	RF Deck Front Panel a1 In to a1 Sampler Module	MS4645A MS4647A	Any
A101 J1	RF Deck Front Panel a1 In (Note 4)	62111-11	Front a1 In - A101 J1, K male to V male RF Cable	RF Deck Front Panel a1 In to a1 Sampler Module	MS4642A MS4644A	Any
A102 J1	A106 J2	62109-3	A106 J2 - A102 J1, V male to male RF Cable	Port 2 High Band Test Coupler to b2 Sampler Module	MS4645A MS4647A	Standard No Options

Table G-4. VectorStar Internal Cables - Sorted by Destination, Origin, and Part Number (3 of 6)

Dest	Origin	PN	Description	Link Between	Models	Options
A102 J1	A106 J2	62111-5	A106 J2 - A102 J1, K male to V male RF Cable	Port 2 Test Coupler to b2 Sampler Module	MS4642A MS4644A	Standard No Options
A102 J1	A123 J2	62106-2	A123 J2 - A102 J1, K female to V male RF Cable	Port 2 High Band Test Step Attenuator to b2 Sampler Module	MS4642A MS4644A	061 062
A102 J1	RF Deck Front Panel b2 In (Note 4)	62109-20	Front b2 In - A102 J1, V male to male RF Cable	RF Deck Front Panel b2 In to b2 Sampler Module	MS4645A MS4647A	051
A102 J1	RF Deck Front Panel b2 In (Note 4)	62111-13	Front b2 In - A102 J1, K male to V male RF Cable	RF Deck Front Panel b2 In to b2 Sampler Module	MS4642A MS4644A	051
A103 J1	A110 J2	62109-15	A110 J2 - A103 J1, V male to male RF Cable	Port 2 Level Detector to a2 Sampler Module	MS4645A MS4647A	Standard No Options
A103 J1	A110 J2	62111-7	A110 J2 - A103 J1, K male to V male RF Cable	Port 2 Level Detector to a2 Sampler Module	MS4642A MS4644A	Standard No Options
A103 J1	RF Deck Front Panel a2 In (Note 4)	62109-7	Front a2 In - A103 J1, V male to male RF Cable	RF Deck Front Panel a2 In to a2 Sampler Module	MS4645A MS4647A	Any
A103 J1	RF Deck Front Panel a2 In (Note 4)	62111-12	Front a2 In - A103 J1, K male to V male RF Cable	RF Deck Front Panel a2 In to a2 Sampler Module	MS4642A MS4644A	Any
A105 J1	A108 J3	67357-4	A108 J3 - A105 J1, K male to male RF Cable	High Band Transfer Switch to Port 1 Reference Coupler	MS4642A MS4644A	051 061 062
A105 J1	A108 J3	67357-2	A108 J3 - A105 J1, K male to male RF Cable	High Band Transfer Switch to Port 1 Reference Coupler	MS4642A MS4644A	Standard No Options
A105 J1	A108 J4	62109-13	A108 J4 - A105 J1, V male to male RF Cable	High Band Transfer Switch to Port 1 High Band Reference Coupler	MS4645A MS4647A	051 061 062
A105 J1	A108 J4	62109-4	A108 J4 - A105 J1, V male to male RF Cable	High Band Transfer Switch to Port 1 High Band Reference Coupler	MS4645A MS4647A	Standard No Options
A107 J1	A108 J2	67357-5	A108 J2 - A107 J1, K male to male RF Cable	High Band Transfer Switch to Port 2 Reference Coupler	MS4642A MS4644A	051 061 062
A107 J1	A108 J2	67357-3	A108 J2 - A107 J1, K male to male RF Cable	High Band Transfer Switch to Port 2 Reference Coupler	MS4642A MS4644A	Standard No Options
A107 J1	A108 J3	62109-9	A108 J3 - A107 J1, V male to male RF Cable	High Band Transfer Switch to Port 2 High Band Reference Coupler	MS4645A MS4647A	Standard No Options
A107 J2	A108 J3	62109-12	A108 J3 - A107 J2, V male to male RF Cable	High Band Transfer Switch to Port 2 High Band Reference Coupler	MS4645A MS4647A	051 061 062
A108 J1	A112 J2	67357-1	A112 J2 - A108 J1, K male to male RF Cable	SDM to High Band Transfer Switch	MS4644A	Any

Table G-4. VectorStar Internal Cables - Sorted by Destination, Origin, and Part Number (4 of 6)

Dest	Origin	PN	Description	Link Between	Models	Options
A108 J1	A113 J2	62112-14	A113 J2 - A108 J1, SMA male to male RF Cable	5-20 GHz Doubler Module to High Band Transfer Switch	MS4642A	Any
A108 J2	A112 J2	62111-4	A112 J2 - A108 J2, K male to V male RF Cable	SDM to High Band Transfer Switch	MS4645A MS4647A	Any
A111 J2	A130 J1	57989-3	A130 J1 - A111 J2, K male to male RF Cable	LO Coupler Module to LO Module	All	Any
A111 J3	A101 J2	62111-8	A101 J2 - A111 J3, V male to K male RF Cable	a1 Sampler Module to LO Module	All	Any
A111 J5	A103 J2	62111-2	A103 J2 - A111 J5, V male to K male RF Cable	a2 Sampler Module to LO Module	All	Any
A112 J1	A114 J2	62112-13	A114 J2 - A112 J1, SMA male to male RF Cable	SQM to SDM	MS4645A MS4647A	Any
A112 J1	A113 J2	62112-22	A113 J2 - A112 J1, SMA male to male RF Cable	5-20 GHz Doubler Module to SDM	MS4644A	Any
A113 J1	A13 J4 (Note 5)	62112-19	A13 J4 - A113 J1, SMA male to male RF Cable	A13 RF Source Module to 5-20 GHz Doubler Module	All	Any
A114 J1	A113 J2	62112-3	A113 J2 - A114 J1, SMA male to male RF Cable	5-20 GHz Doubler Module to SQM	MS4645A MS4647A	Any
A115 J1	A13 J8 (Note 5)	62112-16	A13 J8 - A115 J1, SMA male to male RF Cable	A13 RF Source Module to Low Band Transfer Switch	All	Any
A118 J2	A116 J2	62112-20	A116 J2 - A118 J2, SMA male to male RF Cable	Port 1 Low Band Reference Bridge to Port 1 Low Band Test Bridge	All	Standard No Options
A118 J2	RF Deck Rear Panel P1 SRC In (Note 4)	62112-2	Rear Port 1 Src In - A118 J2, SMA male to male RF Cable	Rear Panel Port 1 Src In to Port 1 Low Band Test Bridge	All	Any
A119 J2	A117 J2	62112-21	A117 J2 - A119 J2, SMA male to male RF Cable	Port 2 Low Band Reference Bridge to Port 2 Low Band Test Bridge	All	Standard No Options
A119 J2	RF Deck Rear Panel P2 SRC In (Note 4)	62112-6	Rear Port 2 Src In - A119 J2, SMA male to male RF Cable	Rear Panel Port 2 Src In to Port 2 Low Band Test Bridge	All	Any
A124 J1	RF Deck Rear Panel b1 In (Note 4)	62112-10	Rear b1 In - A124 J1, SMA male to male RF Cable	Rear Panel b1 In to Port 1 Low Band Test Step Attenuator	All	062
A125 J1	A116 J2	62112-5	A116 J2 - A125 J1, SMA male to male RF Cable	Port 1 Low Band Reference Bridge to Port 1 Low Band Source Step Attenuator	All	061 062
A126 J1	A117 J2	62112-11	A117 J2 - A126 J1, SMA male to male RF Cable	Port 2 Low Band Reference Bridge to Port 2 Low Band Source Step Attenuator	All	062
A127 J1	RF Deck Rear Panel b2 In (Note 4)	62112-9	Rear b2 In - Port 2 Test Step Attenuator, SMA male to male RF Cable	Rear Panel b2 In to Port 2 Low Band Test Step Attenuator	All	061 062
A128 J2	RF Deck Front Panel P1 SRC In (Note 4)	62104-1	Front Port 1 Src In to A128 J2, K male to female RF Cable	RF Deck Front Panel Port 1 Src In to Port 1 Diplexer/Bias Tee	MS4642A MS4644A	Any

Table G-4. VectorStar Internal Cables - Sorted by Destination, Origin, and Part Number (5 of 6)

Dest	Origin	PN	Description	Link Between	Models	Options
A128 J2	RF Deck Front Panel P1 SRC In (Note 4)	62107-1	Front Port 1 Src In - A128 J2, V male to female RF Cable	RF Deck Front Panel Port 1 Src In to Port 1 Diplexer/Bias Tee Assembly	MS4645A MS4647A	Any
A102 J1	A123 J2	62107-3	A123 J2 - A102 J1, V male to female RF Cable	High Band Test Step Attenuator to b2 Sampler Module	MS4645A MS4647A	061 062
A129 J2	RF Deck Front Panel P2 SRC In (Note 4)	62104-4	Front Port 2 Src In to A129 J2, K male to female RF Cable	RF Deck Front Panel Port 2 Src In to Port 2 Diplexer/Bias Tee	MS4642A MS4644A	Any
A129 J2	RF Deck Front Panel P2 SRC In (Note 4)	62107-4	Front Port 2 Src In - A129 J2, V male to female RF Cable	RF Deck Front Panel Port 2 Src In to Port 2 Diplexer/Bias Tee Assembly	MS4645A MS4647A	Any
MB2 PCB P41	A18 PCB P3	3-806-175	A18 P3 - MB2 P41, Interface Cable	A18 RF Control PCB to Motherboard 2 PCB	All	Any
MB2 PCB P42	A18 PCB P3	3-806-185	A18 J18 - MB2 P42, Ribbon Cable	A18 RF Control PCB to Motherboard 2 PCB	All	Any
MB2 PCB P63	A3 PCB	3-806-184	A3 USB - MB2 P63, USB cable	A3 Single Board Computer PCB to Motherboard 2 PCB	All	Any
RF Deck Front Panel a1 Out (Note 4)	A109 J2	62109-17	A109 J2 - Front a1 Out, V male to male RF Cable	Port 1 Detector to RF Deck Front Panel a1 Out	MS4645A MS4647A	Any
RF Deck Front Panel a1 Out (Note 4)	A109 J2	67357-7	A109 J2 - Front a1 Out, K male to male RF Cable	Port 1 Level Detector to RF Deck Front Panel a1 Out	MS4642A MS4644A	Any
RF Deck Front Panel A2 Out (Note 4)	A110 J2	62109-18	A110 J2 - Front a2 Out, V male to male RF Cable	Port 2 Detector to RF Deck Front Panel a2 Out	MS4645A MS4647A	Any
RF Deck Front Panel a2 Out (Note 4)	A110 J2	67357-8	A110 J2 - Front a2 Out, K male to male RF Cable	Port 2 Level Detector to RF Deck Front Panel a2 Out	MS4642A MS4644A	Any
RF Deck Front Panel b1 Out (Note 4)	A104 J2	62109-14	A104 J2 - Front b1 Out, V male to male RF Cable	Port 1 High Band Test Coupler to RF Deck Front Panel b1 Out	MS4645A MS4647A	Any
RF Deck Front Panel b1 Out (Note 4)	A104 J2	67357-9	A104 J2 - Front b1 Out, K male to male RF Cable	Port 1 Test Coupler to RF Deck Front Panel b1 Out	MS4642A MS4644A	051 061 062
RF Deck Front Panel b2 Out (Note 4)	A106 J2	62109-10	A106 J2 - Front b2 Out, V male to male RF Cable	Port 2 High Band Test Coupler to RF Deck Front Panel b2 Out	MS4645A MS4647A	Any
RF Deck Front Panel b2 Out (Note 4)	A106 J2	67357-10	A106 J2 - Front b2 Out, K male to male RF Cable	Port 2 Test Coupler to RF Deck Front Panel b2 Out	MS4642A MS4644A	051 061 062

Table G-4. VectorStar Internal Cables - Sorted by Destination, Origin, and Part Number (6 of 6)

Dest	Origin	PN	Description	Link Between	Models	Options
RF Deck Front Panel P1 SRC Out (Note 4)	A105 J3	62109-19	A105 J3 - Front Port 1 Src Out, V male to male RF Cable	Port 1 High Band Reference Coupler to RF Deck Front Panel Port 1 Src Out	MS4645A MS4647A	051
RF Deck Front Panel P1 SRC Out (Note 4)	A105 J3	67357-11	A105 J3 - Front Port 1 Src Out, K male to male RF Cable	High Band Reference Coupler to RF Deck Front Panel Port 1 Src Out	MS4642A MS4644A	051
RF Deck Front Panel P2 SRC Out	A107 J3	62109-8	A107 J3 - Front Port 2 Src Out, V male to male RF Cable	Port 2 High Band Reference Coupler to RF Deck Front Panel Port 2 Src Out	MS4645A MS4647A	051 061
RF Deck Front Panel P2 SRC Out (Note 4)	A107 J3	67357-12	A107 J3 - Front Port 2 Src Out, K male to male RF Cable	Port 2 High Band Reference Coupler to RF Deck Front Panel Port 2 Src Out	MS4642A MS4644A	051 061
RF Deck Rear Panel a1 Out (Note 4)	A116 J3	62112-4	A116 J3 - Rear a1 Out, SMA male to male RF Cable	Port 1 Low Band Reference Bridge to Rear Panel a1 Out	All	Any
RF Deck Rear Panel a2 Out (Note 4)	A117 J3	62112-7	A117 J3 - Rear a2 Out, SMA male to male RF Cable	Port 2 Low Band Reference Bridge to Rear Panel a2 Out	All	Any
RF Deck Rear Panel b1 Out (Note 4)	A118 J3	62112-32	A118 J3 - Rear b1 Out, SMA male to male RF Cable	Port 1 Low Band Test Bridge to Rear Panel b1 Out	All	Any
RF Deck Rear Panel b2 Out (Note 4)	A119 J3	62112-31	A119 J3 - Rear b2 Out, SMA male to male RF Cable	Port 2 Low Band Test Bridge to Rear Panel b2 Out	All	Any
RF Deck Rear Panel P1 SRC Out (Note 4)	A116 J2	62112-36	A116 J2 - Rear Port 1 Src Out, SMA male to male RF Cable	Port 1 Low Band Reference Bridge to Rear Panel Port 1 Src Out	All	051
RF Deck Rear Panel P1 SRC Out (Note 4)	A125 J2	62112-12	A125 J2 - Rear Port 1 Src Out, SMA male to male RF Cable	Port 1 Low Band Source 1 Step Attenuator to Rear Panel Port 1 Src Out	All	061 062
RF Deck Rear Panel P2 SRC Out (Note 4)	A117 J2	62112-34	A117 J2 - Rear Port 2 Src Out, SMA male to male RF Cable	Port 2 Low Band Reference Bridge to Rear Panel Port 2 Src Out	All	051 061
RF Deck Rear Panel P2 SRC Out (Note 4)	A126 J2	62112-8	A126 J2 - Rear Port 2 Src Out, SMA male to male RF Cable	Port 2 Low Band Source Step Attenuator to Rear Panel Port 2 Src Out	All	062

Subject Index

Symbols

. (Decimal) Key A-10
+/- (Plus/Minus) Key A-10

Numerics

10 MHz In A-19
10 MHz Out A-19

A

a1 Access Loop A-25
A18 Modules 11-11
A18 PCB 11-11
a2 Access Loop A-25
ACCESS LOOPS (. A-25
Analog In 2 . . . . . A-22
APN
3-2000-1517 . . . . . 2-5, 2-97, 2-105, 2-115
3-2000-1525 . . . . . 2-5, 2-97, 2-105, 2-123
34YK50C 2-4, 2-97, 2-114, 2-124
34YV50C 2-4, 2-97, 2-114, 2-124
3-60124-11 . . . . . 2-4, 2-96, 2-112, 2-116
3-60124-13 . . . . . 2-4, 2-96, 2-112, 2-116
3-60124-9 . . . . . 2-4, 2-96, 2-111, 2-116
61920-3 . . . . . 2-17, 2-104, 2-106, 2-116
61923-3 MB2 Phase 1 2-17, 2-104, 2-106, 2-117
61924-3 . . . . . 2-16, 2-98, 2-105, 2-117
61929-3 . . . . . 2-8, 2-98, 2-105, 2-117
61933-3 . . . . . 2-6, 2-98, 2-105, 2-117
62078 . . . . . 2-7, 2-95, 2-105, 2-117
62088 . . . . . 2-16, 2-96, 2-106, 2-117
62091 . . . . . 2-4, 2-103, 2-106, 2-118
62095-1 Digital Fan Assy 2-17, 2-95, 2-106, 2-118
62095-1 Rear Panel Fan Assy .2-16, 2-97, 2-106, 2-118
62109-1 . . . . . 2-3, 2-96, 2-112, 2-118
62112-1 . . . . . 2-4, 2-97, 2-112, 2-118
65413-3 . . . . . 2-6, 2-98, 2-105, 2-119
66050 . . . . . 2-11, 2-101, 2-113, 2-119
66052 . . . . . 2-11, 2-102, 2-113, 2-119
66245 . . . . . 2-8, 2-98, 2-113, 2-120
66480 . . . . . 2-8, 2-98, 2-113, 2-120
66487 . . . . . 2-8, 2-99, 2-113, 2-120
67357-6 . . . . . 2-3, 2-96, 2-113, 2-121
68570 . . . . . 2-11, 2-102, 2-113, 2-122
Application Key A-6
Attenuator Modules - Option 061 11-8
Attenuator Modules - Option 062 11-9
Average Key A-7

B

b1 Access Loop A-25
b2 Access Loop A-25
Backspace / Delete Key A-10
Bias Fuse Port 1 . . . . . A-24
Bias Fuse Port 2 . . . . . A-24
Bias Input Port 1 Connector A-23
Bias Input Port 2 Connector A-23

C

Calibration Key A-6
Channel Key A-8
Chassis Grounding Port A-5
Clear/Tab Key A-10
Connectors A-2

D

Dedicated GPIB Port A-20
Digit Keys A-10
Display Key A-8
Documents
10410-00266 - Operation Manual A-1
Down Arrow Key A-9

E

Enter Key A-10
Ext ALC A-18
Ext Analog Out A-18
Ext Trigger A-21
External I/O Port A-20, A-26

F

File Key A-6
Frequency Key A-7
Front Panel A-1
Connectors A-2
Keys A-2

G

GPIB Port A-20

H

Hard Keys A-2
Help Key A-6

I

IEEE 488.2 GPIB Port A-20
Input/Outputs a1 IF A-19
Input/Outputs a2 IF A-19
Input/Outputs b1 IF A-19
Instrument models 1-3

K

Keyboard PS/2 Port A-23
Keys
Calibration A-6
Front Panel A-2
Standby/Operate A-5

L

LAN Ethernet Port A-23

Left Arrow Key A-9
Lock Status A-21

M

Marker Key A-8
Measurement Key A-6
Mouse PS/2 Port A-23
MS4640A VNA Models 1-1
MS4642A A18 Modules and PCB 11-12
MS4644A A18 Modules and PCB 11-13
MS4645A / MS4647A A18 Modules and PCB . 11-14

P

Port
Grounding A-5
Port 1 Src Loop A-25
Port 2 Src Loop A-25
Power Key A-7
Preset Key A-7
PS/2 Port A-23

R

Ready for Trigger A-21
Rear Panel A-1
Rear Panel Ports and Connectors A-13
Receive - Port 1 . . . . . A-11
Receive - Port 2 . . . . . A-12
Response Key A-8
RF Deck Top Side Center Modules 11-2
RF Deck Top Side Rear Attenuator Modules . . 11-7
RF Deck Top Side Right Modules 11-5
Rotary Knob A-9

S

Safety Symbols
For Safety Safety-2
In Manuals Safety-1
On Equipment Safety-1
Scale Key A-8
Scope of manual 1-1
Select Key A-9
Serial Port A-18
Source - Port 1 . . . . . A-11, A-12
Standby/Operate Key A-5
Sweep Key A-7
System Key A-6

T

Test - Port 1 . . . . . A-11
Test - Port 2 . . . . . A-12
Test Port 1 . . . . . A-11
Test Port 2 . . . . . A-12
Touch Screen A-1
Trace Key A-8
Trigger Out A-21

U

Up Arrow Key A-9
USB Ports A-12

V

Video Port A-17
VNA Test Point 1-2

X

XGA/VGA Video Port A-17

10410-00268

E

Anritsu utilizes recycled paper and environmentally conscious inks and toner.

Anritsu Company
490 Jarvis Drive
Morgan Hill, CA 95037-2809
USA
http://www.anritsu.com